COMMONWEALTH™ ENGINEERS, INC.

A wealth of resources to master a common goal.

Sanitary District of Highland, Indiana

Capacity, Management, Operation, and Maintenance (CMOM) Manual

March 2019; Revised June 2019; March 2020; February 2021; January 2022; March 2022; January 2024

A wealth of resources to master a common goal.

CEI Project No. S18140

TABLE OF CONTENTS

EXECUTIVE SUMMARY ES-1

ES.1 Introduction ES-1

ES.2 Collection System Capacity ES-1

ES.3 Collection System Management ES-1

ES.4 Collection System Operation ES-3

ES.5 Collection System Maintenance ES-5

ES.6 CMOM Program Purpose ES-9

SECTION 1 COLLECTION SYSTEM CAPACITY 1-1

1.1 Introduction 1-1

1.2 Collection System 1-1

A. North 5th Street Inceptor 1-2

B. 41st Street Interceptor 1-2

C. Sanitary Sewer Cross-Connects 1-2

1. Structural Bypass 1-3

2. Structural Bypass Procedures 1-3

3. Mechanical Bypass (Pumping) 1-4

4. Mechanical Bypass Procedures 1-4

D. Lift Stations 1-5

E. Laporte Equalization Basin 1-6

F. 37th St. Equalization Basin 1-6

G. Dry and Wet Weather Collection System Operating Conditions 1-6

1.3 Purpose of CMOM Program 1-13

SECTION 2 COLLECTION SYSTEM MANAGEMENT 2-1

2.1 Organizational Structure 2-1

2.2 Training 2-1

2.3 Internal Communication 2-2

2.4 Customer Service 2-2

A. Complaint Log 2-2

B. Public Communication Programs 2-3

1. Public Outreach 2-3

2. Consumer Confidence Reports 2-3
3. Storm Water Quality Management Plan 2-3
4. Website 2-4
2.5 Management Information Systems 2-5
2.6 SSO Notification Program 2-6
A. Overflow Emergency Response Plan 2-6
1. Goals and Objectives 2-7
2. Overflow Response Procedure 2-7
3. Dispatch of Appropriate Crews to Site of Sewer Overflow 2-8
4. Overflow Correction, Containment, Mitigation and Clean-Up 2-8
5. Public Advisory Procedure 2-9
6. Regulatory Notification Procedure 2-9
B. Website Outreach 2-10
2.7 Legal Authority 2-11
A. Sewer Use Ordinance 2-11
B. FOG Program 2-13
SECTION 3 COLLECTION SYSTEM OPERATIONS 3-1
3.1 Budgeting 3-1
A. Fee Summary 3-1
B. Rate Ordinance 3-2
C. Disposition of Funds 3-3
D. Charges from Hammond Sanitary District 3-5
3.2 Hydrogen Sulfide Monitoring and Control 3-5
3.3 Safety 3-6
3.4 Emergency Preparedness and Response 3-6
3.5 Modeling 3-6
A. Hydraulic Modelling Overview 3-6
B. Baseline Hydraulic Assessment 3-10
C. Future Growth 3-10
D. Health Sanitation, and Security 3-13
E. SSO Monitoring 3-13

3.6 Mapping 3-14
3.7 New Construction 3-15
A. Sewer Design 3-15
B. Construction Standards and Specifications 3-15
C. Construction Inspection Program 3-15
3.8 Pump Stations 3-15
A. Operation 3-15
B. Inspection 3-16
C. Emergencies 3-16
D. Temporary Bypass Pump Equipment 3-16
E. Emergency Response and Monitoring 3-17
F. Recordkeeping 3-21
SECTION 4 COLLECTION SYSTEM MAINTENANCE 4-1
4.1 Maintenance Budgeting 4-1
4.2 Planned and Unplanned Maintenance 4-1
A. Preventive Maintenance 4-1
B. Corrective Maintenance 4-1
C. Maintenance of Right-of-Way or Easements 4-2
4.3 Collection System Inflow and Infiltration (I/I) Investigative Programs 4-2
A. RedZone Robotics - Collection System Assessment 4-3
B. Flow Monitoring 4-4
C. Smoke Testing Deficiency Correction Program 4-5
4.4 Cleaning 4-6
A. Cleaning Equipment 4-6
B. Chemical Cleaning and Root Removal 4-6
C. FOG Program 4-7
D. Sanitary Sewer / Manhole Cleaning 4-7
4.5 Sewer System Testing 4-8
A. Smoke Testing 4-8
B. Dye Testing 4-8
4.6 Sewer System Inspection 4-8

A. CCTV Inspection of Sanitary Sewers and Manholes. 4-8
4.7 Rehabilitation....4-9
A. Sanitary Sewer / Manhole Rehabilitation....4-9
B. RedZone Robotics Collection System Assessment Program 4-9
C. Flow Monitoring 4-9
D. Smoke Testing Deficiency Correction Program....4-9
4.8 Equipment, Parts, and Tools Management....4-10
A. Parts Inventory....4-10
B. Equipment and Tools Management 4-10

TABLES

Table 1-1 Sanitary-to-Storm Cross Connects....1-2
Table 1-2 Existing Lift Stations....1-5
Table 2-1 Management Information System Summary....2-6
Table 3-1 Monthly Base Rates....3-2
Table 3-2 Monthly Rate Based on Metered Usage, Per 1,000 Metered Gallons....3-3
Table 3-3 Additional Surcharge....3-3
Table 3-4 Monthly Rate for Unmetered Usage....3-3
Table 3-5 Fund Balances 2016-2018....3-4
Table 3-6 Expenditures by Fund 2016-2018....3-5
Table 3-7 Highland Billed Treatment to Hammond Sewer District 2016-2018....3-5
Table 3-8 Summary of Collection System Flow Meters....3-9
Table 4-1 Sanitary Sewer and Manhole Rehabilitation 2009-2018....4-6
Table 4-2 Highland Sanitary District List of Equipment....4-11

FIGURES

Figure 1-1 General Location Map....1-8
Figure 1-2 Sanitary Sewer Sub-Basins....1-9
Figure 1-3 Sanitary Collection System....1-10
Figure 1-4 Sanitary Sewer System Map....1-11
Figure 1-5 Sanitary Sewers System Age....1-12
Figure 3-1 Flow Meter Sub-Basins....3-8
Figure 3-2 Collection System Hydraulically Stressed Areas....3-11
Figure 3-3 Future Growth....3-12
Figure 3-4(A) Highland SCADA System....3-18
Figure 3-4(B) Highland SCADA System....3-19
Figure 3-4(C) Highland SCADA System....3-20
Figure 4-1 Sanitary Sewers System Map....4-14
Figure 4-2 Sanitary Sewers System Age Map....4-15
Figure 4-3 Cleaning Schedule and Televising Inspections....4-16

ATTACHMENTS

Attachment A Organizational Chart

Attachment B Job Descriptions

Attachment C Safety, Equipment, and Conference Training

Attachment D Complaint Call Log

Attachment E Annual SSO Reports and Summary of Semi-Annual Reports

Attachment F Highland Overflow Emergency Response Plan

Attachment G IDEM Bypass-Overflow Incident Report

Attachment H Highland Municipal Code

Attachment I Rate Ordinance

Attachment J 2016-2022 Financial Reports

Attachment K Sewage Collection and Treatment Agreement with Hammond

Attachment L Municipal Employee Handbook

Attachment M Sanitary Sewer Standards and Specifications

Attachment N Lift Station Checklist

Attachment O Weekly Generator Inspection Form

Attachment P Tank Debris Measuring and Cleaning SOP and Schedule

Attachment Q Location of Collection System Trouble Spots

Attachment R Example Door Hangers

Attachment S CMOM Self-Assessment Checklist

Attachment T Pure Air Filtration Odor Control Manual

Attachment U Vactor Truck 2100 SOP

Attachment V Confined Space Training

Attachment W 2019-2023 Injury Report

Attachment X SCADA Operation Manual

Attachment Y Camera Truck SOP

Attachment Z Highland Sanitary District Consent Decree Civil Action No. 2:22-cv-00086

Executive Summary

ES.1 Introduction

The Town of Highland is located along Interstate 80/94 in the northwestern corner of Lake County, Indiana and was incorporated in 1910. The Town is considered a part of the Chicago metropolitan area and borders several municipalities including the City of Hammond (north), the Town of Munster (west), the Town of Griffith (east), and the Town of Schererville (south).

The Highland Sanitary District (Highland) is a state established authority allowed by requirements specified under Indiana Code. Highland owns and operates the sanitary sewer collection system that conveys flow to the City of Hammond's combined sewer collection system for treatment. The Highland Sanitary District is currently under contract with Hammond for sewage treatment. The wastewater collection system is categorized as a separate sanitary system, which is subject to Clean Water Act regulations that prohibit sanitary sewer overflows (SSOs). Highland's collection system has no issue conveying sanitary flows during dry weather conditions. During wet weather conditions, the collection system becomes significantly impaired and is susceptible to sanitary sewer overflows.

Highland has developed the SSO remedial plan as part of its Consent Decree (CD) to address the SSOs within the N. 5th Street sub-basin and tributary sub-basins. Through negotiation with the Department of Justice, United States Environmental Protection Agency, and the Indiana Department of Environmental Management, the CD was lodged on December 9, 2022, by the US District Court for the Northern District of Indiana, Hammond Division, under Civil Action No. 2:22-cv-00086.

ES.2 Collection System Capacity

Highland's collection system encompasses over 3,600 acres and consists of seven (7) sub-basins with eleven (11) lift stations, approximately eighty-nine (89) miles of gravity sewer ranging from six (6) to thirty-six (36) inches in diameter, five (5) miles of force main, the Laporte Street Equalization Basin (500,000 gal.), the 37th Street Equalization Basin (1,000,000 gal.), and two (2) unpermitted sanitary-to-storm cross connects within the North 5th Street sub-basin which become active and discharge sanitary flow to the stormwater collection system during wet weather events. The service population was 23,984 per the 2020 Census. **Figure 1-2** illustrates the locations of the sanitary sewer sub-basins and the lift stations. Major collection system attributes are illustrated in **Figures 1-3 and 1-4.** The pipe sizes and age of the collection system by basin is shown on **Figure 1-5.** These maps will be updated periodically with information obtained by the RedZone Robotics Collection System Assessment Program.

ES.3 Collection System Management

The Department of Public Sanitation and Sanitary District was established as an executive department in and for the Town of Highland. The department is under the control of a

Board of Sanitary Commissioners, which consists of five (5) commissioners. The various components of Collection System Management are listed below.

Training - Safety training is provided at weekly meetings every Tuesday. Employees receive training on operating equipment as required by their specific jobs, and record of this training is tracked on a spreadsheet. Conferences such as the American Water Works Association (AWWA) and the Indiana Water Environment Association (IWEA) provide opportunities for additional training through workshops provided at these events. The utility has recently obtained 2021 IPEP training videos which are available to employees at any time. These will be updated every year going forward. Highland has a goal of employees attending 100% of the weekly meetings and 50% of the IPEP training as attendance allows. Safety training effectiveness is compared against injury reports per year.

Communications – Internal Communications with employees consist of weekly staff meetings, on-site meetings, emails, and posting information to bulletin boards. The Public Works Director meets every Monday with representatives of the building, fire, parks, police, and redevelopment departments to discuss issues related to operation.

Public Outreach – Various methods are used to communicate management, operation, and maintenance information about the Highland Sanitary District. Newsletters, bill stuffers, door hangers, and a departmental website are all used to inform residents, local government, media, schools, organizations, and other groups about the activities of the District.

Website – The Town of Highland maintains a website that the District uses to:

- Provide District contact information;
- Inform the public about past and future projects;
- Provide notifications for major construction or maintenance work;
- Post reports such as the Annual Sanitary Sewer Overflow Report; and
- Provide links to other departments.

Customer Service – Highland's complaint call log is maintained in a spreadsheet-based complaint system. As complaint calls come in, logs are created, and each job is prioritized and assigned to appropriate personnel. After the problem is addressed, the responsible person notes that the complaint has been addressed and informs the superintendent. The status of the complaint is then updated in the spreadsheet. Typical complaints deal with basement backups, debris in streets, and street flooding.

Management Information Services – Highland maintains administrative documents, compliance, operational, and maintenance records mostly on a computer system, but some are still done by hand. Record retention policies will comply with the terms in the Consent Decree Paragraph 72 which states that "**all records shall be kept until from the Date of Lodging until two years after the termination of this Decree".** The District

is moving in the direction of maintaining all records digitally and is currently evaluating a work order database.

Overflow Emergency Response Plan – Highland's Overflow Emergency Response Plan (OERP) is an action plan that defines procedures for managing SSOs to protect public health and the environment, and to comply with regulatory requirements relating to SSOs. The OERP was prepared and implemented in October 2011 and updated in 2021. Specific objectives with respect to responding to SSOs are as follows:

- Eliminate preventable SSOs;
- Respond quickly to minimize impact, duration, and volume of the SSO;
- Provide accurate estimates to the volume of the SSO;
- Ensure corrective action is taken in a timely manner;
- Notify the proper regulatory agencies and the public, in a timely manner, of any SSO;
- Identify and implement measures to prevent the occurrence of preventable and multiple SSOs;
- Document and define procedures to address SSO prevention and response; and
- Provide uniform, clear, and consistent policies and procedures for Highland staff to reference and follow in the event of an SSO.

Legal Authority - The Highland Sewer Use Ordinance is defined in Chapter 12.20 of Municipal Code and enforced by the Highland Department of Public Works. This ordinance defines the regulations pertaining to sewers and sewage disposal for the Highland Sewer District.

ES.4 Collection System Operation

Budgeting and Fees - The Highland Sanitary District generates revenue from fees charged to manage wastewater, stormwater and solid waste for the sewer district. The fees, together with the taxes levied, must produce revenues sufficient to fund operation, maintenance, and administrative expenses; the principal and interest on bonds; and to provide money for the improvements fund.

Disposition of Funds - User charges collected for wastewater and storm water treatment are deposited on a net-revenue basis to three primary Funds: Sewage Operating Fund, Sewer Improvement Fund and Sewage Cash Reserve Fund. After all monthly expenses are paid, net revenue is first posted to the Sewage Operating Fund, which is used to operate and maintain the system for day-to-day expenses such as supplies, services, employees, and benefits. The amount posted to this Fund is the lesser of either the total net revenue amount or the amount necessary to return the Sewage Operating Fund to a target balance of $700,000. Any remaining revenue is then posted to the Sewer Improvement Fund, which is used for expenses related to system upgrades, maintenance, and rehabilitation. The amount posted to this Fund is the lesser of either the remaining

revenue amount or the amount necessary to return the Sewer Improvement Fund to a target balance of $800,000. Any remaining revenue is posted to the Sewage Cash Reserve Fund as surplus earnings. Transfers from this fund to the municipal general fund are made in accordance with HMC Section 12.10.110 and IC 8-1.5-3-11 as a means of providing the municipality with a reasonable return on the sewage utility plant of the municipality. Major improvement projects outside the scope of the funds mentioned above are paid for through the Capital Improvement Fund, which consists of capital raised from bonds issued by the Highland Sanitary District.

Hydrogen Sulfide Monitoring and Control - Although Hydrogen sulfide (H_2S) has not been observed as a major problem in the Highland collection system, portable multi gas detectors manufactured by MSA are used to monitor H_2S concentrations in the system in order to ensure the safety of staff and the public.

Safety - Safety training is provided at weekly meetings on subjects such as air monitoring; cold weather; substance abuse; electricity; fire prevention; first aid; portable electric tools; slips, trips, and falls; etc.

Emergency Preparedness and Response - In the event of emergency, Highland's Emergency Disaster Plan is followed. As part of this plan, the designated Emergency Operations Center (EOC) is the location where all department heads meet to coordinate the response to the event. The disaster plan is maintained and directed by the Highland Fire Department in conjunction with the Homeland Security Department**.**

Modeling - In 2016, a hydraulic model that accurately represents Highland's sanitary collection system was developed using the United States Environmental Agency's (USEPA) hydraulic modeling program SWMM5. Rainfall and flow meter data obtained from a network of gauges and permanent magnetic flow meters at each primary lift station was used to develop a calibrated hydraulic model. Modeling results for existing and future conditions indicate that the collection system, storage basins, and lift stations are capable of conveying the existing dry weather flows. However, the modeling also indicates that portions of the collection system cannot convey peak flows from large wet weather events. Sanitary sewer overflows occur in the existing collection system at the unpermitted sanitary-to-storm cross-connects, the 41st Street lift station area, and the northeastern portion of the North 5th Street sub-basin.

Sanitary Sewer Overflow Monitoring - Highland is required to implement procedures to report all SSOs. The District must also provide public notification, emergency response for the protection of public health, SSO cleanup and mitigate SSO impact to the extent possible. The OERP, SCADA monitoring network, and staff response are all used to adequately meet these requirements.

Mapping - Highland maintains a Sewer Atlas in CAD format that shows force mains, pump stations, sanitary sewers/structures, and storm sewers/structures located on a base topography map. The Graphical User Interface (GUI) for the SWMM program has GIS capabilities which the District has used in the past as a simplistic GIS tool. In 2014, the Highland Sanitary District contracted with RedZone Robotics, Inc.to conduct a complete condition assessment of Highland's sanitary sewer collection system and provide a GIS-

based platform for management of the collection system assets. The televising information and Pipeline Assessment Certification Program/Manhole Assessment Certification Program (PACP/MACP) reports are incorporated into a GIS-based asset management software program called ICOM3. which allows for the storage and viewing of televising videos and inspection records.

New Construction - The Highland collection system is nearing full build-out conditions; however, if new design is required, the work is performed by consultants. NIES Engineering is currently responsible for reviewing and approving all proposed sanitary sewer extensions. New construction is performed by contractors. Construction standards and specifications for sanitary sewers are based on Chapter 30 of the Recommended Standards for Sewage Works (Ten State Standards) and defined in Chapter 17.30 of the Highland Municipal Code. Construction inspection is performed by Highland employees or contractors and the Building Department is responsible for lateral inspections.

Pump Stations - Highland operates and maintains a total of eleven (11) lift stations which are provided with standby power generation equipment capable of running all pumps in case of emergency. The lift stations have control panels with programmed logic controllers (PLC) that communicate with the SCADA system. The pumps are set on automatic rotation to minimize wear and the wet wells have set points established in the control logic to reduce multiple starts and stops. There is a manual procedure established for manipulating pump operations during wet weather to increase in-line storage of wet weather flows which utilizes the two (2) equalization (EQ) tanks located in the collection system. Records are kept by hand for compliance, operation, and maintenance of the pump stations. The SCADA system history files are also kept and stored digitally for future reference. Equipment manuals are kept at each station for quick access.

Temporary Bypass Pump Equipment - The Service Agreement with the Hammond Sanitary District allows for Highland to pump a maximum instantaneous flow of 7.5 million gallons per day (MGD) from the 81st Street and 5th Street Lift Stations which have a total pumping capacity of approximately 15.7 MGD. Hammond has installed flow control valves and meters on the force mains from Highland, giving them the ability to throttle flow from Highland to the 7.5 MGD limit. In 2012, the Highland Sanitary Board purchased two (2) temporary bypass pumps which were sized to pump the difference between 7.5 MGD and 15.7 MGD into the storm sewer system. This was intended to provide a means of preventing backup into the basements of homes, particularly in the 5th Street Basin. Recently, the District has also purchased a 4-inch portable pump to further assist with temporary bypass pumping.

ES.5 Collection System Maintenance

Maintenance Budgeting - Highland uses preventive maintenance techniques, which involve regular, routine maintenance that aids in consistent equipment operation, prevents any unplanned downtime, and reduces the potential for expensive costs from unanticipated equipment failure. Due to this practice, approximately seventy-five (75) percent of the maintenance costs for the District are preventative and twenty-five (25) percent are corrective or due to failures in the system.

Planned and Unplanned Maintenance - Highland's preventive maintenance technique involves the systematic inspection of equipment where potential problems are detected and corrected in order to prevent equipment failure. The collection system personnel maintain records of inspection and servicing, as well as being informed on the lifespan of each part to understand the replacement frequency. Lift station inspection and maintenance activities are conducted on daily, weekly, monthly, quarterly, six-month and yearly basis. Generators are inspected weekly. Storm tanks, or wet wells, are cleaned every five or ten years. Equalization tanks are cleaned every year. Sanitary wet wells are cleaned at varying frequencies, depending on rate of solids/debris accumulation and/or operational experience. Emergency repairs are handled as they occur per protocols outlined in the Overflow Emergency Response Plan. The SCADA system is used extensively by operation and maintenance personnel to find corrective maintenance issues before problems evolve into emergency situations.

Collection System Inflow and Infiltration Investigative Programs - The Highland Sanitary District has concluded three (3) programs to reduce the inflow and infiltration (I&I) into the system. These programs are discussed below and focused on assessing the condition of the collection system, monitoring flows, and delineating areas where storm drains are connected to the sanitary sewers, in order to identify and prioritize necessary sewer repairs. **Moving forward, Highland has committed to cleaning and televising the entire SSCS every ten years at a rate of 10% annually per NASSCO MACP protocols. If blockages occur at a higher frequency in specific areas, Highland will increase the sewer cleaning frequency. List of higher frequency areas will be reviewed and updated annually as part of Annual CMOM review. Highland has planned the next 5-year cleaning and televising schedule for its sewer system, which will clean approximately 48,428 linear feet of sewer per year across five areas within the SSCS. See Figure 4-3 for specific cleaning area details.**

RedZone Robotics Collection System Assessment Program - This program utilized state-of-the-art televising equipment to capture and evaluate the condition of each asset. Highland Sanitary District, Indiana Board of Sanitary Commissioners contracted with RedZone Robotics, Inc. ("Redzone") of Pittsburgh, Pennsylvania in 2014 to conduct a complete condition assessment of the District's sanitary sewer collection system and provide a Geographical Information System (GIS) based platform for management of the collection system assets.

The condition assessment was divided into the two primary service areas of Highland: the 5th Street Basin and the 81st Street Basin. Sanitary sewers and manholes within the 5th Street Basin were inspected between 2014 and 2016; sanitary sewers and manholes within in the 81st Street Basin were inspected beginning in 2018 and should be completed in 2019. Condition assessments for sanitary sewer laterals were not included, as these pipes are located on private property between the customer's building and the public sanitary sewer and are not the responsibility of Highland.

Pipes twelve (12) inches in diameter and smaller were inspected using robotic televising equipment fitted with two 360-degree digital cameras, one facing forward and one facing backward for enhanced visual coverage of the pipe interior. Pipes fifteen (15) inches in

diameter and larger were inspected using multi-sensor equipment that combined standard closed-circuit television (CCTV) video with sonar and laser technologies to estimate debris accumulation and pipe interior corrosion/deflection. Sections of pipe that were unable to be fully inspected due to excessive roots or debris accumulation were subsequently jetted, cleaned and CCTV televised by Highland Public Works staff. Regardless of the inspection method used, each manhole and pipe segment were rated according to National Association of Sewer Service Companies (NASSCO) industry standards for Pipeline and Manhole Assessments to characterize the asset's condition.

The televising information and Pipeline Assessment Certification Program/Manhole Assessment Certification Program (PACP/MACP) reports were incorporated into a GIS-based asset management software program called ICOM3. The PACP ratings from the initial system-wide condition assessment were used to generate a priority list for repairs and maintenance. As repairs were completed and assets re-inspected, a new priority list was generated annually to reflect improvements to the system and re-evaluate asset conditions based on the most recent data available.

Based on televising and smoke testing inspections conducted through 2020, RedZone was contracted to perform CIPP sewer lining for 4,760 feet of sewer within the 81st Street Sub-basin. The CIPP sewer lining work was completed in 2021. As of July 31, 2022, all inspections and CIPP projects for the 5th Street and 81st Street Sub-basins were completed. A summary of the sanitary sewers and manholes that have been rehabilitated with CIPP lining from 2009-2021 is shown in **Table 4-1**.

Flow Monitoring Program - This program involves using area-velocity meters in the main system and also upstream in smaller diameter sewers to assist in locating sewers with I&I issues.

Smoke Testing Deficiency Correction Program - This program involves replacing manhole covers with open pick holes, correcting area drains on residential property that have been identified as being connected to the sanitary sewer system, and disconnecting storm drainage from the sanitary sewer system for commercial/industrial properties.

FOG Program - Highland's FOG Program is described in the Municipal Code Chapter 12.20 and administered by the Building Department through the permitting process. Fat, grease, oil and sand interceptors are required when, in the opinion of the Public Works Director, they are necessary for the proper handling of liquid wastes containing grease in excessive amounts, or any flammable wastes, sand and other harmful ingredients. The local limit established in the code for oil, grease, and the like (hexane solubles) is 100 mg/l. There are less than one hundred (100) regulated entities in the FOG program and most, if not all, of the restaurant and food processor regulated entities have a grease trap installed. The grease traps are not currently inspected regularly by Highland due to manpower limitations(A1)(A2); however, a routine inspection program that utilizes a checklist will be implemented if resources allow.

Sewer System Cleaning - Highland currently owns a VACTOR 2100 Plus Combination Sewer Cleaner truck that is used to clean the sanitary sewer lines. A root cutter and RootX foaming tree root killer is used by collection system personnel to treat tree root intrusion

into the sewer system. Highland has "hot spots" that are routinely cleaned approximately every eight (8) weeks. Currently, there are approximately twenty (20) locations that are related to discharges from restaurants. Sanitary and storm wet wells/tanks are cleaned on a regular schedule ranging from one (1) to ten (10) year intervals.

Sewer System Testing - The objective of the current smoke testing program is to utilize deficiencies identified in the February 2009 Smoke Testing Study, correct the deficiencies to the extent practicable and reasonable and document/verify that corrections have taken place. Currently the District only uses dye testing on a "as-needed" basis for investigation. Highland is designated as a Municipal Separate Storm Sewer System (MS4) and is obligated to implement an Illicit Discharge Detection and Elimination (IDDE) Program. Dye Testing is used in this program to ensure that illegal sources connected to the storm sewer system are removed when identified.

Sewer System Inspection - CCTV inspection for the District is conducted using a twelve (12) foot TV DRW High Cube Van equipped with a solid state color sewer TV camera, self-propelled compact steerable camera transporter, and a seventeen (17) inch LCD flat screen industrial TV monitor. Personnel are trained in the Pipeline Assessment and Certification Program (PACP) developed by the National Association of Sewer Companies (NASSCO). Televising of main line sewers with condition assessments are made by Public Works Staff, based on PACP criteria. Collection system personnel currently use the jet truck and CCTV equipment to clean, televise, inspect, and assess targeted sanitary sewer lines

Rehabilitation - Highland Sanitary District is currently conducting three (3) primary programs to reduce the inflow and infiltration into the system. These programs are focused on assessing the condition of the collection system, monitoring flows, and delineating areas where storm drains are connected to the sanitary sewers, in order to identify and prioritize necessary sewer repairs. The Sanitary Board has recently approved $800K-$1M for sewer lining and replacement on an annual basis.

The Collection System Assessment Program generates PACP ratings from the system-wide condition assessment, which are used to generate a priority list for repairs and maintenance. During 2021, no CIPP sewer lining work was completed in the 5th St. basin. All of the pipe segments in the basin have been televised and inspected. For the 81st St. basin, 907 feet of 8-inch, 44 feet of 10-inch, 1,921 feet of 12-inch and 1,836 feet of 15-inch pipe were scheduled to be lined.

The ongoing Flow Monitoring Program utilizes technology developed by Stantec Consultants which provides valuable assistance in locating small diameter sewers with higher I&I.

As part of the Smoke Testing Deficiency Program, the foundation drain disconnect program has resulted in the elimination of approximately 1,700 home foundation drains and 16 commercial/industrial property connections from the sanitary sewer system which eliminated a cumulative total of approximately 72,625 square feet of tributary area. This work has been placed on hold by the Board due to cost considerations and difficulty in assessing success in terms of reductions in annual flow totals for the 5th St. Lift Station.

When funding for the project by Highland was lowered from 100% to 80% to reduce costs, many property owners could not afford the 20% required to have the work done. The funds originally used for this program are now being directed to priority projects such as sewer lining and maintenance of the lift stations and the collection system.

ES.6 CMOM Program Purpose

CMOM programs integrate standard operation and maintenance activities that are already being implemented by the owner or operator with a new set of information management requirements. Each year, Highland will perform an annual review of its CMOM Program which will involve an evaluation of the performance of the sanitary sewer collection system over the last year. The CMOM Self-Assessment Checklist (**Attachment S**) will be used as a reference for the annual review.

As outlined in Appendix B of the CD, the Capacity, Management, Operation & Maintenance (CMOM) Program is designed to:

- Provide better management, operation, and maintenance of Highland's Sanitary Sewer Collection System (SSCS);
- Identify and address capacity constraints throughout the SSCS;
- Prevent both capacity-related and maintenance-related Sanitary Sewer Overflows (SSOs);
- Provide timely and appropriate response to emergency situations, including SSOs; and
- Plan and schedule work on the SSCS based on condition and performance.

Section 1 – Collection System Capacity

1.1 Introduction

The Town of Highland is located along Interstate 80/94 in the northwestern corner of Lake County, Indiana as shown in **Figure 1-1**. The Town is considered a part of the Chicago metropolitan area and borders several municipalities including the City of Hammond (north), the Town of Munster (west), the Town of Griffith (east), and the Town of Schererville (south).

The Town of Highland was incorporated in 1910. As the Town grew and expanded, sewers were installed to meet the needs of the community. Highland's collection system was originally constructed as a combined sewer system; however, it was converted to a separate sanitary sewer and storm sewer system during the late 1970s and 1980s. Due to this, portions of the collection system are sized to handle peak flows much greater than necessary, which may be contributing to the significant amounts of infiltration and inflow (I&I) entering the system during wet weather events.

The Highland Sanitary District (Highland) is a state established authority allowed by requirements specified under Indiana Code. Highland owns and operates the sanitary sewer collection system that conveys flow to the City of Hammond's combined sewer collection system for treatment. The Hammond Sanitary District is responsible for the collection, conveyance, and treatment of sewage and stormwater from the City of Hammond and the Town of Munster. Hereinafter the Hammond Sanitary District will be referred to as Hammond. The Highland Sanitary District is currently under contract with Hammond for sewage treatment. The wastewater collection system is categorized as a separate sanitary system, which is subject to Clean Water Act regulations that prohibit sanitary sewer overflows (SSOs). The reality though is that sanitary sewer collection systems experience significant impacts due to I&I originating from aged public infrastructure and leaking private laterals. In older sanitary collection systems, such as portions of the existing sewers in Highland, I&I from poorly constructed or inadequately maintained sanitary sewers can cause hydraulic behavior and wet weather responses that are similar to a combined sewer collection system.

Highland has developed the SSO remedial plan as part of its Consent Decree (CD) to address the SSOs within the N. 5th Street sub-basin and tributary sub-basins. Through negotiation with the Department of Justice, United States Environmental Protection Agency, and the Indiana Department of Environmental Management, the CD was lodged on December 9, 2022, by the US District Court for the Northern District of Indiana, Hammond Division, under Civil Action No. 2:22-cv-00086 (**Attachment Z**).

1.2 Collection System

Highland's collection system encompasses over 3,600 acres and consists of seven (7) sub-basins. Each sub-basin is tributary to one (1) of the District's primary sanitary lift stations. The service population was 23,984 per the 2020 Census. Highland's collection system has no issue conveying sanitary flows during dry weather conditions. During wet weather conditions, the collection system becomes significantly impaired and is

susceptible to sanitary sewer overflows. **Figure 1-2** illustrates the locations of the District's sanitary sewer sub-basins and the lift stations.

Highland Sanitary District currently operates a separate sanitary sewer system with approximately eighty-nine (89) miles of gravity sewer ranging from six (6) to thirty-six (36) inches in diameter and five (5) miles of force main. The collection system consists of pipes of varying age, some of which were installed as early as 1939. The 5th Street service area and tributary sewer sub-basins (i.e. N 5th Street sub-basin, 41st Street sub-basin, Grace Street sub-basin, Pettit Park sub-basin, L&J sub-basin) are approximately 2,130 acres and include the Laporte Street Equalization Basin. Major collection system attributes are illustrated in **Figure 1-3 and 1-4** and discussed below. The pipe sizes and age of the collection system by basin is shown on **Figure 1-5.**

A. North 5th Street Interceptor

The North 5th Street Interceptor is currently Highland's most critical interceptor and was constructed in the late 1970s. The interceptor is approximately 6,000 linear feet and extends from the North 5th Street lift station to the confluence of three force mains south of Ridge Road. In 2017, the District completed approximately 2,250 feet of CIPP lining at the upstream end of the interceptor to extend its useful life. As shown in **Figure 1-3**, flows from the L&J, Grace Street, 41st Street, and Pettit Park lift stations are conveyed to the North 5th Street Interceptor. From there, flow is conveyed to the North 5th Street Lift Station that pumps to Hammond's combined sewer collection system.

B. 41st Street Interceptor

The 41st Street Interceptor services the 41st Street sub-basin and was constructed in 1958. The interceptor conveys flow to the 41st Street lift station and its force main extends approximately 3,125 feet north to the upstream end of the North 5th Street Interceptor. Targeted CIPP lining has occurred in various upstream areas of the 41st Street basin to rehabilitate sewers and extend their useful life.

C. Sanitary Sewer Cross-Connects

Currently, there are two (2) unpermitted sanitary-to-storm cross-connects within the North 5th Street sub-basin that become active during large wet weather events. A previously active unpermitted sanitary-to-storm cross-connection at Sanitary MH 1098, north of Glenwood Street, was plugged on April 4, 2018. **Table 1-1** contains the location, size, and elevation of each unpermitted cross-connect.

Table 1-1
Sanitary-to-Storm Cross-Connects

Cross-Connect	Structure	Location	Overflow Pipe Size (in)	Overflow Invert Elevation (ft)
1	1345	Laporte St.	12	588.58
2	1230	Grand Blvd.	10	581.34

** Sanitary-to-storm cross-connect 1098 plugged on April 4, 2018*

1. Structural Bypass

Because of significant inflow/infiltration issues within the sanitary sewer system, the HSD has constructed two (2) unpermitted structural bypasses within the sanitary sewer collection system, located in the Fifth Street Basin along the Fifth Street Interceptor Sewer, to reduce the threat of property backups caused by sanitary sewer surcharging. Each structural bypass consists of a cross- connection between the sanitary sewer system and the storm sewer system. Flowmeters have been installed on the bypasses in order to alert staff whenever a bypass occurs and to measure the quantity of effluent discharged through the bypass

a. Structural Bypass No. 1 is located at Sanitary MH #1345, south of LaPorte Street on Fifth Street and consists of a 12" pipe connected to Storm MH #3091. The outfall has a Tideflex (duckbill) valve that does not allow stormwater to backflow to the sanitary sewer. The bypass is monitored with a flowmeter.

b. Structural Bypass No. 2 is located at Sanitary MH #1230 at Johnston School on Fifth Street and consists of an 10" pipe connected to Storm MH #3050. The outfall has a Tideflex (duckbill) valve that does not allow stormwater to backflow to the sanitary sewer. The bypass is monitored with a flowmeter.

2. Structural Bypass Procedures

Whenever an SSO structural bypass occurs, the Person-in-Charge shall use the following procedures:

a. The 5th Street Sanitary Lift Station Wet Well Level SCADA System in conjunction with three (3) new level sensors in manholes #1059, #1230, and #1345 are used as an early warning device of when a structural bypass is about to occur. High water alarm signal is sent to the PIC when levels hit 13' at the North 5th wet well. Operator then manually closes valves at 5th and Laporte, acknowledges alarm at North 5th, and monitors all levels.

b. Signs are activated that indicate possible SSO to river. If SSO is confirmed, signs must remain posted for seventy-two (72) hours following the end of a SSO, or longer if required by the Lake County Health Department.

c. Flows are then automatically diverted into the 500,000-GAL LaPorte Street Equalization Basin located just east of 5th Street until the operator determines that the valves can be opened. This determination is based on the rain event and surcharge levels.

d. At 15' level, the overflow MH 1230 has likely started, so monitoring at MH 1059 begins to provide adequate response time to prevent basement backups. At 16' level, the bypass pump is set up at Duluth and Grace Pl. Signs are then activated that indicate possible SSO to the Little Calumet

River at North Drive Pump Station.

e. At 20' level, bypassing is already occurring at Duluth and Grace Place and the North 5th bypass pump is started.

f. Periodically make a visual check of Little Calumet River at Fifth Street Storm Water Pump Station for any evidence of a fish kill.

g. At the conclusion of the bypass event, the Special Sanitary District Project Coordinator or designee shall download the data log on each bypass flowmeter and submit the data, together with a Sanitary Sewer Overflow Report (**Attachment F - Exhibit A**), to the Sanitary District Superintendent within 24 hours following the bypass event. The data log shall indicate the duration of the bypass event and the total volume of effluent bypassed to the storm water collection system.

3. Mechanical Bypass (Pumping)

The HSD, in order to reduce the threat of property backups and the ensuing damage caused by sanitary sewer surcharging, may bypass pump SSO from the sanitary sewer system to the storm sewer system in order to reduce the threat of property backups caused by sanitary sewer surcharging. In this case, sanitary sewer surcharging may be a result of excessive flows caused by inflow/infiltration from heavy rainfall, from structural failure of the collection system, or from pumping facilities system failures, including power outages.

4. Mechanical Bypass Procedures

Whenever it has been determined by the PIC that there is a likely threat of a sanitary sewer surcharge that may cause basement flooding of wastewater, the PIC shall contact the Sanitary District Superintendent or his designee that the threat exists. Upon the approval of the Sanitary District Superintendent or his designee, the PIC shall use the following procedures:

a. Mobilize pump(s), as required, to reduce or eliminate the threat of basement flooding/backups.

b. Prior to initiating pumping, record the depth of wastewater below the rim in the "pumping from" manhole.

c. Periodically check the waterway at storm sewer discharge location for evidence of fish kill caused by the mechanical bypass.

d. Monitor the bypass pumping and upstream water levels closely and terminate pumping as soon as the threat of basement flooding has ended.

e. Whenever a mechanical bypass (pump) is installed, the PIC shall make a record on the Bypass Pumping Log (**Attachment F - Exhibit B**) noting the location of the bypass, date and time of the bypass, size, make, and model of the pump(s), and the duration of the bypass.

f. At the conclusion of the bypass event, the Special Sanitary District Project Coordinator or designee shall prepare a Sanitary Sewer Overflow Report (**Attachment F - Exhibit A**) and a Bypass Pumping Log (**Attachment F - Exhibit B**) on the bypass and submit the report to the Sanitary District Superintendent within 24 hours following the bypass event.

D. Lift Stations

Highland operates and maintains a total of eleven (11) lift stations. Six (6) are located in the 5th Street Basin, and five (5) are located in the 81st Street Basin. All eleven (11) lift stations are provided with standby power generation equipment capable of running all pumps in the lift station. The 37th Place Lift Station, which is located in the 81st Street Basin discharges directly to the "side-line" 37th Place Equalization Basin. The LaPorte and Johnston (L&J) Street Lift Station in the 5th Street Basin discharges directly to the LaPorte Street Equalization Basin.

The Lift Stations in the Highland collection system are shown in **Figure 1-2,** and a summary of these stations showing the number of pumps, corresponding firm capacity, and age of major force mains are presented in **Table 1-2**.

Table 1-2
Existing Lift Stations

No.	Lift Station Name	Basin	No. Pumps	Firm Capacity (gpm)	Force Main Age (Year Built)
1	North 5th Street	5th St.	3	2,000	61 (1959)
2	Laporte & Johnston	5th St.	2	1,250	52 (1968)
3	41st Street	5th St.	2	2,050	60 (1960)
4	Grace Street	5th St.	2	2,000	61 (1959)
5	Pettit Park	5th St.	2	500	30 (1990)
6	Alti Court.	5th St.	2	50 (2)	-
7	Lincoln Ave.	81st St.	2	1,700	57 (1963)
8	37th Street	81st St.	2	5,000	-
9	81st Street	81st St.	3	1,250	57 (1963)
10	Kennedy Ave.	81st St.	2	40	-
11	Georgetown	81st St.	2	280	-

As shown in **Figure 1-3**, Highland operates six (6) lift stations within the North 5th Street service area and tributary sewer sub-basins. Three (3) major lift stations, Pettit Park, Grace Street and 41st Street, all discharge to structure 1479C, which is located at the upstream end of the 21-inch, 5th Street Interceptor. A fourth major

lift station, known as the LaPorte and Johnston (L&J) Street lift station, discharges through the LaPorte Street Equalization Basin, prior to discharging to the 21-inch, 5th Street Interceptor. The North 5th Street lift station discharges to the City of Hammond.

E. Laporte Equalization Basin

As shown in **Figure 1-3**, the Laporte Street Equalization Basin is located in the North 5th Street service area. The capacity of this underground storage facility is approximately five hundred thousand (500,000) gallons. During wet weather events, two (2) eight-inch valves are manually closed, and sanitary wastewater is stored within the tank until downstream hydraulic capacity becomes available.

F. 37th Street Equalization Basin

As shown in **Figure 1-2**, the 37th Street Equalization Basin is located in the Lincoln St. sub-basin. The capacity of this underground storage facility is approximately one million (1,000,000) gallons. During large wet weather events, sanitary wastewater is stored within the tank until downstream hydraulic capacity becomes available.

G. Dry and Wet Weather Collection System Operating Conditions

During dry weather, sanitary flow is conveyed to the 41st Street, Pettit Park, Grace Street, and the Laporte Street lift stations via the respective sanitary interceptors within each sub-basin. From the sanitary lift stations, the dry weather flow is pumped into the North 5th Street sub-basin and is conveyed to the North 5th Street lift station. Dry weather flow is then pumped under the Little Calumet River to the City of Hammond's combined sewer collection system. Dry weather sanitary flow from the Lincoln Street sub-basin is conveyed to the Lincoln Street lift station, which pumps flow to the 81st Street sub-basin. The dry weather flow then travels to the 81st Street lift station and is pumped under the Little Calumet River to the City of Hammond's combined sewer collection system.

During wet weather, Highland's sanitary sewer system experiences significant amounts of I&I, which causes capacity issues in several portions of the collection system. Similar to dry weather conditions, the sanitary flows from the 41st Street, Pettit Park, Grace Street, and the Laporte Street lift stations are conveyed to the North 5th Street sub-basin during wet weather. The Laporte Street Equalization (EQ) Basin, which is an approximate five hundred thousand (500,000) gallon underground storage tank, is located immediately downstream of the Laporte Street lift station in the North 5th Street sub-basin. During wet weather events, two (2) eight-inch valves are manually closed, and sanitary wastewater is stored within the tank until downstream hydraulic capacity becomes available. Similar to dry weather flow conditions, wet weather flow is pumped out of the North. 5th Street sub-basin via the North 5th Street lift station. Currently, if the depth in the N. 5th Street lift station's wet well reaches a depth of approximately twenty (20) feet, an

auxiliary pump is turned on and wet weather flow is pumped to the Highland's stormwater lift station, which discharges flow to the Little Calumet River.

As shown in **Figure 1-2**, the North 5th Street sub-basin also contains three (3) unpermitted sanitary-to-storm cross-connects located along the 5th Street Interceptor, which become active and discharge sanitary flow to Highland's stormwater collection system. The most northern unpermitted sanitary-to-storm cross-connect (1098) was plugged on April 4, 2018.

During large wet weather events, Highland also utilizes the 37th Street EQ basin, which is located within the Lincoln Street sub-basin and is a one million (1,000,0000) gallon underground storage tank. Similar to the Laporte EQ Basin, the 37th Street EQ Basin stores wet weather sanitary wastewater in the tank until downstream capacity becomes available. Wet weather sanitary flow from the Lincoln Street sub-basin is conveyed to the Lincoln Street lift station. From the Lincoln Street lift station, wet weather flow is pumped to the 81st Street sub-basin. Flow is then conveyed to the 81st Street lift station and pumped to the City of Hammond's combined collection system.

The average dry weather flow for the system is 1.75 MGD and the maximum wet weather flow is 42 MGD. The ratio of maximum wet weather flow to average dry weather flow is 24.0.

The loading generated by the system for TSS and CBOD are as follows:

81st St. - TSS 238 mg/l CBOD 223 mg/l

North 5th St. - TSS 166 mg/l CBOD 94 mg/l

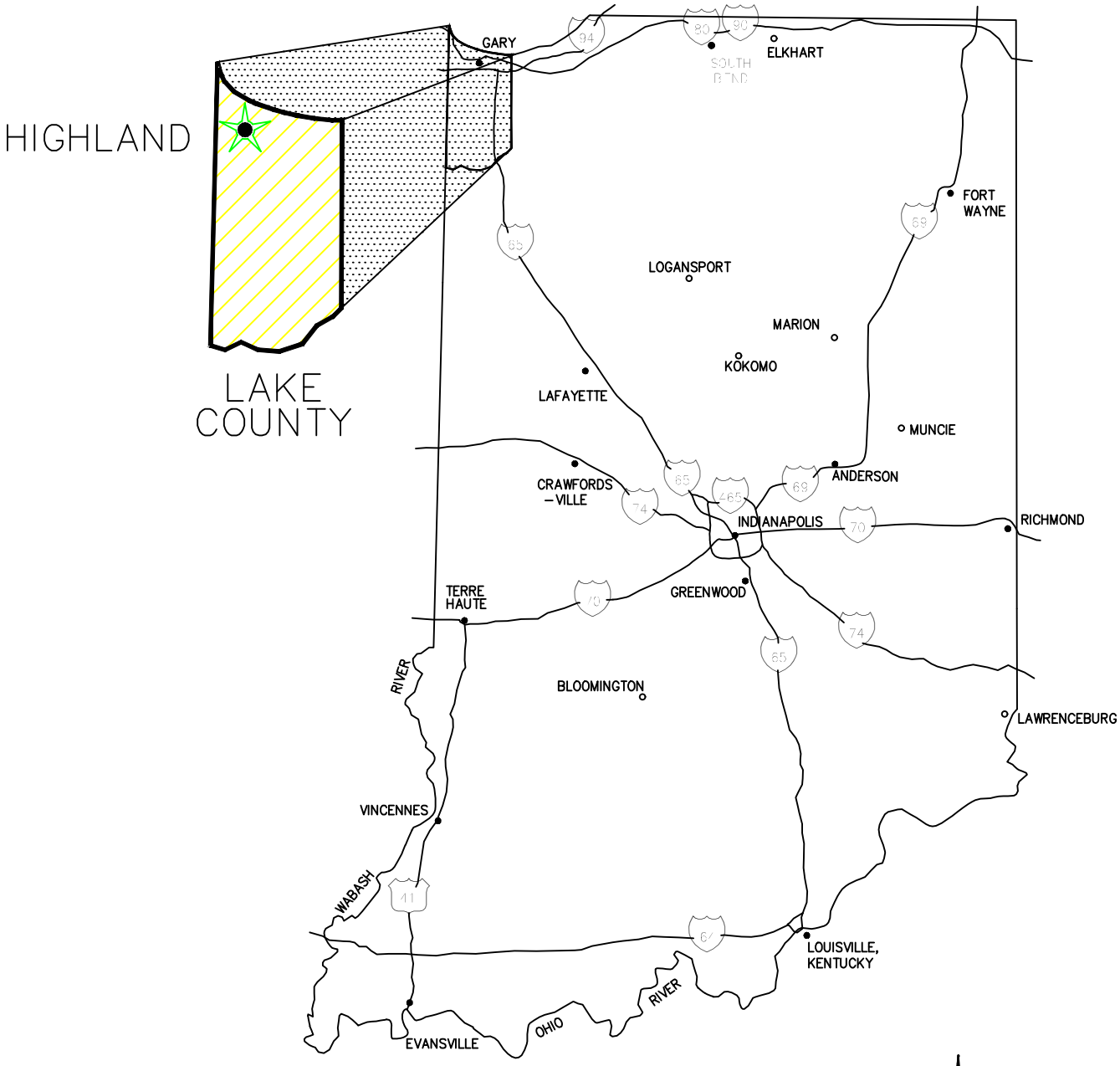

GENERAL LOCATION MAP

NO SCALE

COMMONWEALTH ENGINEERS, INC.

TOWN OF HIGHLAND

FIGURE 1-1

GENERAL LOCATION MAP

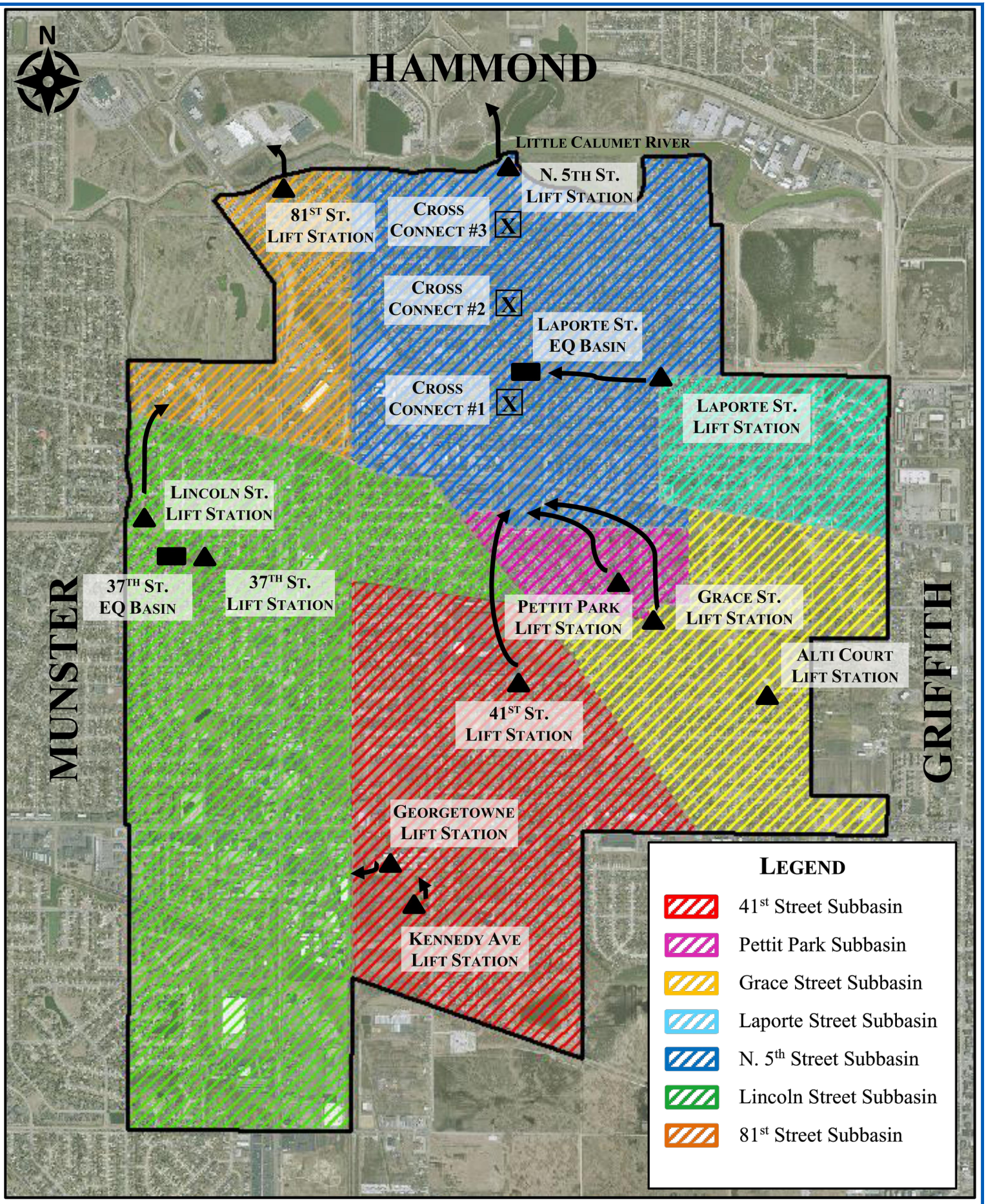

COMMONWEALTH ENGINEERS, INC.

TOWN OF HIGHLAND

FIGURE 1-2

SANITARY SEWER SUBBASINS

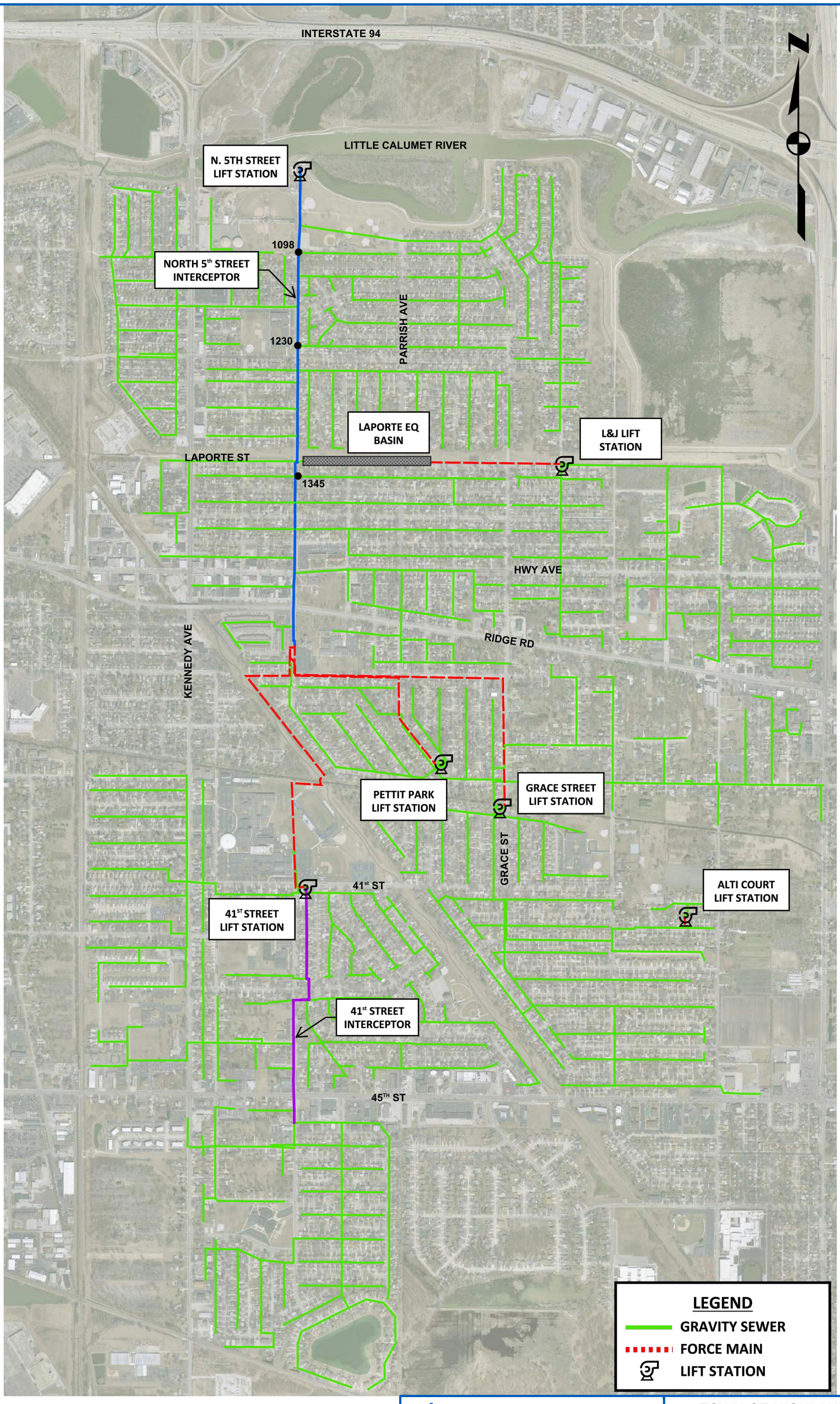

COMMONWEALTH ENGINEERS, INC.

TOWN OF HIGHLAND

FIGURE 1-3

SANITARY COLLECTION SYSTEM

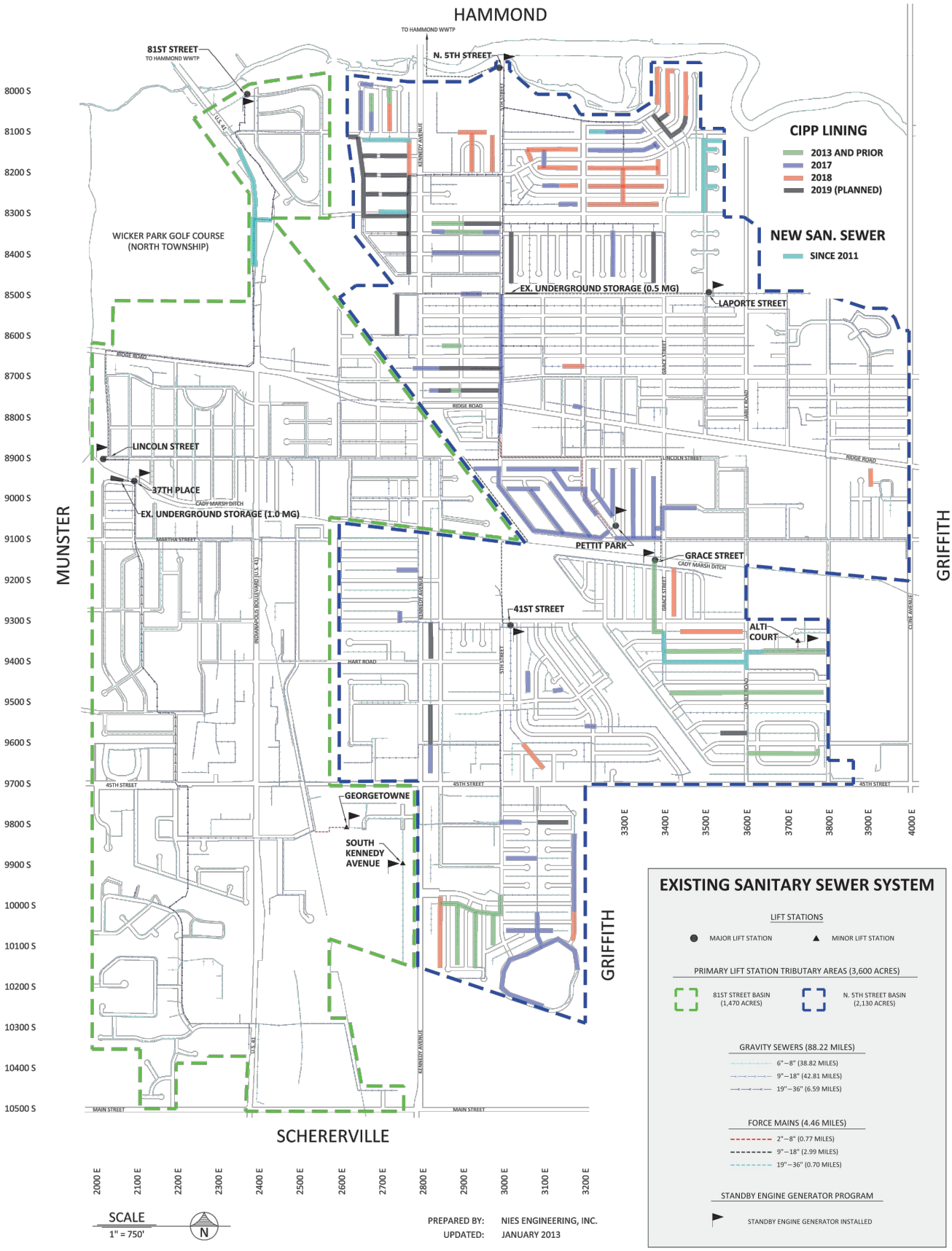

HIGHLAND
INCORPORATED 1910

COMMONWEALTH ENGINEERS, INC.

TOWN OF HIGHLAND

FIGURE 1-4

SANITARY SEWER SYSTEM MAP

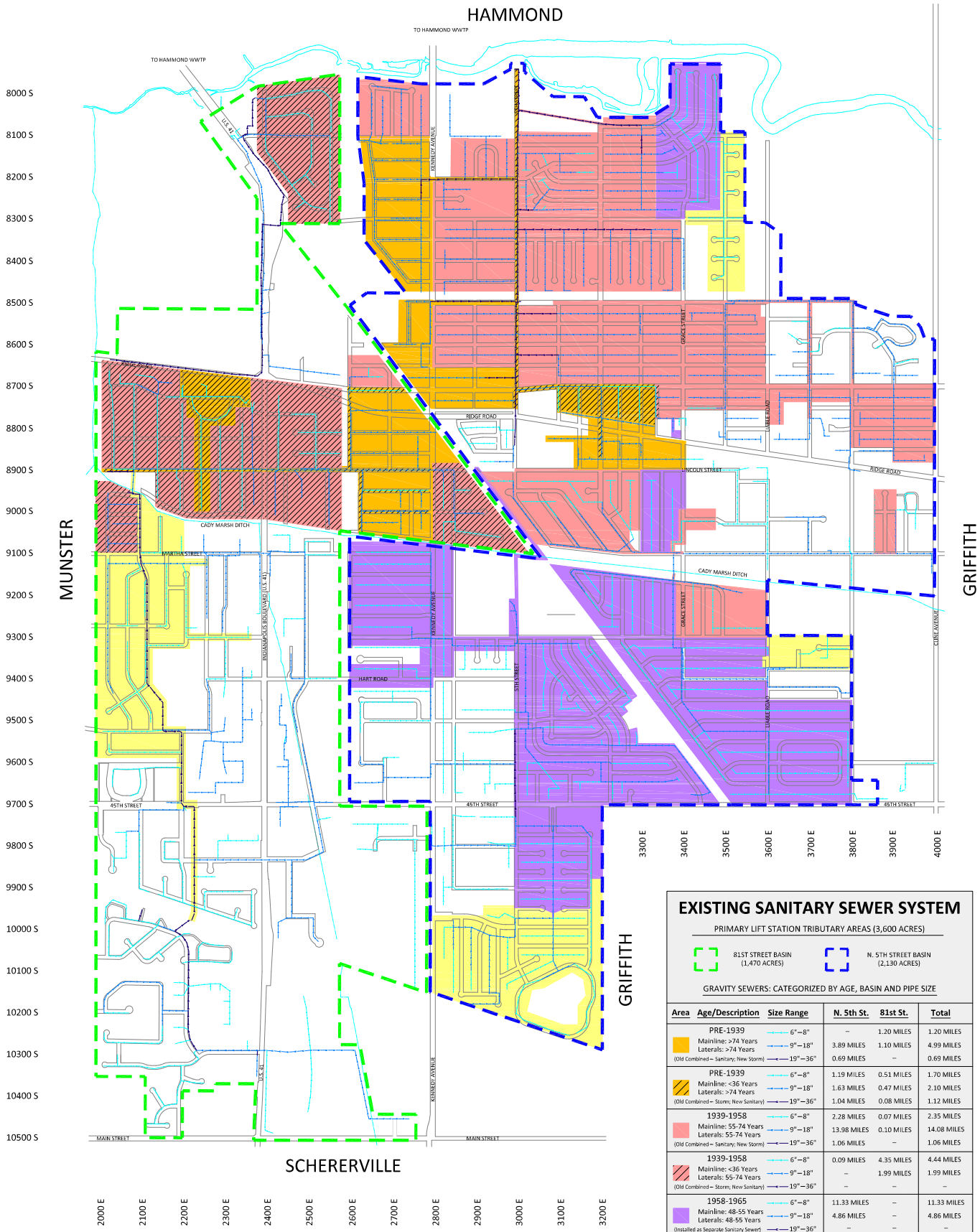

EXISTING SANITARY SEWER SYSTEM

PRIMARY LIFT STATION TRIBUTARY AREAS (3,600 ACRES)

81ST STREET BASIN (1,470 ACRES)

N. 5TH STREET BASIN (2,130 ACRES)

GRAVITY SEWERS: CATEGORIZED BY AGE, BASIN AND PIPE SIZE

Area	Age/Description	Size Range	N. 5th St.	81st St.	Total
	PRE-1939	6"–8"	–	1.20 MILES	1.20 MILES
	Mainline: >74 Years	9"–18"	3.89 MILES	1.10 MILES	4.99 MILES
	Laterals: >74 Years (Old Combined – Sanitary; New Storm)	19"–36"	0.69 MILES	–	0.69 MILES
	PRE-1939	6"–8"	1.19 MILES	0.51 MILES	1.70 MILES
	Mainline: <36 Years	9"–18"	1.63 MILES	0.47 MILES	2.10 MILES
	Laterals: >74 Years (Old Combined – Storm; New Sanitary)	19"–36"	1.04 MILES	0.08 MILES	1.12 MILES
	1939-1958	6"–8"	2.28 MILES	0.07 MILES	2.35 MILES
	Mainline: 55-74 Years	9"–18"	13.98 MILES	0.10 MILES	14.08 MILES
	Laterals: 55-74 Years (Old Combined – Sanitary; New Storm)	19"–36"	1.06 MILES	–	1.06 MILES
	1939-1958	6"–8"	0.09 MILES	4.35 MILES	4.44 MILES
	Mainline: <36 Years	9"–18"	–	1.99 MILES	1.99 MILES
	Laterals: 55-74 Years (Old Combined – Storm; New Sanitary)	19"–36"	–	–	–
	1958-1965	6"–8"	11.33 MILES	–	11.33 MILES
	Mainline: 48-55 Years	9"–18"	4.86 MILES	–	4.86 MILES
	Laterals: 48-55 Years (Installed as Separate Sanitary Sewer)	19"–36"	–	–	–
	1965-1973	6"–8"	3.17 MILES	2.47 MILES	5.64 MILES
	Mainline: 40-48 Years	9"–18"	1.39 MILES	0.71 MILES	2.10 MILES
	Laterals: 40-48 Years (Installed as Separate Sanitary Sewer)	19"–36"	–	1.42 MILES	1.42 MILES

SCALE
1" = 750'

N

PREPARED BY: NIES ENGINEERING, INC.
UPDATED: JANUARY 2013

HIGHLAND
INCORPORATED 1910

SEWER SYSTEM EVALUATION STUDY

SANITARY SEWER SYSTEM AGE

FIGURE 1-5

1.3 Purpose of CMOM Program

CMOM programs integrate standard operation and maintenance activities that are already being implemented by the owner or operator with a new set of information management requirements in order to:

- Better manage, operate, and maintain collection systems;
- Investigate capacity constrained areas of the collection system;
- Proactively prevent SSOs; and
- Effectively respond to SSO events.

The CMOM Program is a guide for owners and operators to use in order to manage the collection system. It encompasses best management practices that have been developed over time by the industry that can be applied over the entire life cycle of the collection system. These practices include:

- Designing and constructing for operation and maintenance (O&M);
- Knowing the composition of the system (inventory and physical attributes);
- Knowing the system (maps and location);
- Knowing the condition of the system (assessment);
- Planning and scheduling work based on condition and performance;
- Repairing, replacing, and rehabilitating system components based on condition and performance;
- Managing timely, relevant information to establish and prioritize appropriate CMOM activities; and
- Training of personnel.

The CMOM Program approach helps the owner or operator with the following:

- Providing a high level of customer service;
- Improving communication with the public, municipalities, planning organizations, and regulators;
- Reducing regulatory non-compliance;
- Optimizing the use of human and material resources;
- Shifting maintenance activities from “reactive” to “proactive”;
- Reducing emergency construction costs;
- Potentially lowering insurance premiums; and
- Improving financial performance.

Each year, Highland will perform an annual review of its CMOM Program which will involve an evaluation of the performance of the sanitary sewer collection system over the last year. The CMOM Self-Assessment Checklist (**Attachment S**) will be used for as a reference for the annual review.

Section 2 – Collection System Management

2.1 Organizational Structure

The Department of Public Sanitation and Sanitary District is established as an executive department in and for the Town of Highland, as authorized in IC 36-9-25-1(a), and the provisions of IC 36-9-25. The department is under the control of a Board of Sanitary Commissioners, which consists of five (5) commissioners. All of the commissioners shall be appointed by the Town Council President, otherwise referred to as the Municipal Executive. The Board of Sanitary Commissioners shall manage and control all sewage works of the District. The Director of Public Works is designated as the Superintendent of the Sewage Works, or his Associate Department Directors (i.e. Operations Director and Street / Sanitation / Utilities / Maintenance / Facilities Supervisors), shall have authority to enforce laws for the District.

Highland Sanitary District maintains an organizational chart that shows the overall personnel structure for the collection system, including operation and maintenance staff. This chart has numbers next to each job classification that indicates how many positions are budgeted and how many are filled. On average, positions remain vacant for approximately 2 months. The organizational chart for the Highland Sanitary District can be found in **Attachment A.** Current job descriptions are maintained for each position and can be found in **Attachment B**.

Positions listed under the Utility Supervisor and Facilities Supervisor are generally those assigned work of the Department of Public Sanitation and Water Utility. However, the same employees, from time to time, may perform work (i.e. snow removal) outside the responsibility of the Department of Public Sanitation and vice versa. Generally, the department is fully staffed, but when a vacancy occurs, it usually takes at least six (6) weeks to hire new personnel.

2.2 Training

Safety training is provided at weekly meetings every Tuesday by a local safety training service on subjects such as air monitoring, cold weather, drinking and drugs, electricity, fire prevention, first aid, portable electric tools, slips and falls, etc. The utility has recently obtained 2021 IPEP training videos which are available to employees at any time. These will be updated every year going forward. The IPEP videos contain training on the following subjects:

Asbestos Awareness, Bloodborne Pathogens, Bucket Truck, Confined Space Entry, Electrical Hazards, Electrical Safety, Emergency Action Plan, Fall Protection, Forklift Safety, Fire Extinguisher Safety, Hazard Communication, Hearing Protection, Lab Safety, Ladder Safety, Lockout / Tagout, PPE, Power and Hand Tool Safety, Process Safety (Chlorine), Respirators, Split Rim Tire Safety, Tree Trimming Safety, Trenching, Welding & Cutting Safety, Working Outdoors Safely.

Highland has a goal of employees attending 100% of the weekly meetings and 50% of the IPEP training as attendance allows.

Employees receive training on the Overflow Emergency Response Plan **(Attachment F)**, confined space entry **(Attachment V)**, operating equipment such as pumps, vacuum trucks **(Attachment U, Attachment Y)**, or storage tanks as required by their specific jobs, and record of this training is tracked on a spreadsheet. Training that is renewed annually includes: lockout/tagout, competent person, trench safety, and cardiopulmonary resuscitation (CPR) training. Conferences such as the American Water Works Association (AWWA) and the Indiana Water Environment Association (IWEA) provide opportunities for additional training through workshops provided at these events.

Typically, the training offered by Highland is 20% manufacturer training and 80% on-the-job training, In the past year, 100% of employees met or exceeded their annual training goals. On-the-Job (OJT) training uses Standard Operating and Standard Maintenance Procedures. **Attachment C** shows the safety training that was conducted for 2017 – 2023 and also the equipment and conference training that employees have obtained in the department. **Attachment U** shows training and SOP for the Vactor 2100 Vacuum Truck. **Attachment V** shows training for confined space entry. **Attachment Y** shows training and SOP for the Camera Truck. The goal for future training will be equivalent to what is shown in **Attachment C**.

The effectiveness of the implemented training programs in promoting safe work practices is measured by the number of injuries experienced by employees. Injury reports are also kept for insurance recordkeeping and reporting. Injury reports can be found in **Attachment W**.

2.3 Internal Communication

Internal Communications with employees consist of weekly staff meetings, on-site meetings, emails, and posting information to bulletin boards. Incentives are offered for performance improvements through an “Employee of the Month” program, which offers additional vacation time if selected. The Public Works Director meets every Monday with representatives of the building, fire, parks, police, and redevelopment departments to discuss issues related to operation.

2.4 Customer Service

A. Complaint Call Log

Highland’s complaint call log is maintained in a spreadsheet-based complaint system. As complaint calls come in, logs are created, and each job is prioritized and assigned to appropriate personnel. After the problem is addressed, the responsible person notes that the complaint has been addressed and informs the superintendent. The status of the complaint is then updated in the spreadsheet. Typical complaints deal with basement backups, debris in streets, and street flooding. Highland deals with emergency calls twenty-four (24) hrs/day and has a goal to resolve customer complaint calls as quickly as possible by responding to a majority of calls in an hour or less. The complaint call log is shown in **Attachment D.**

B. Public Communications Programs

1. Public Outreach

Various methods are used to communicate management, operation, and maintenance information about the Highland Sanitary District. Newsletters, bill stuffers, door hangers, and a departmental website are all used to inform residents, local government, media, schools, organizations, and other groups about the activities of the District. Information is provided such as: notification of major construction or maintenance work to be conducted, recommended cleanup procedures following basement backups and overflows when they occur, and compliance records. Example of the door hangers used can be found in **Attachment R**. While internal public relations training is presently conducted, employees of the collection system are formally trained in public relations through an training topics on how to respond to public complaints (ie. Basement backups, flooding in streets, etc.) and conducting themselves in a professional manner in the field.

2. Consumer Confidence Reports

As required by the 1996 Safe Drinking Water Act Amendments, Highland issues annual Consumer Confidence Reports which creates a general public awareness on utility services and regulatory compliance obligations. These reports are distributed by mail and the Town's website and are posted in the public places shown below:

- Highland Public Works Garage - 8001 Kennedy Ave.
- Highland Town Hall - 3333 Ridge Rd.
- Highland Public Library - 2841 Jewett Ave.
- Highland Post Office - 8500 Kennedy Ave.

3. Storm Water Quality Management Plan

Highland's Storm Water Quality Management Plan requires Public Education and Outreach as well as Public Involvement and Participation Minimum Control Measures (MCMs). Highland contracts with the Northwestern Indiana Regional Planning Commission (NIRPC) to provide public education and outreach for the Highland Municipal Separate Storm Sewer System (MS4) program. Highland's partnership with the NIRPC has been successful in providing region-based educational messages that are able to reach customers.

Highland periodically utilizes its community newsletter, the Gazebo Express, as another tool to educate and outreach to the public about storm water quality issues. The newsletter is published monthly, and the latest twelve (12) issues are posted on the main page of the Town's website www.highland.in.gov. These MS4 Public Education & Outreach and Public

Involvement and Participation MCM activities further raise awareness on utility services provided by Highland.

4. Website

The Town of Highland maintains a website that is used by the District to:

- Provide District contact information;
- Inform the public about past and future projects;
- Provide notifications for major construction or maintenance work;
- Post reports such as the Annual Sanitary Sewer Overflow Report; Summary of I/I investigative programs and
- Provide links to other departments.

The SSO report contains specific information on each overflow event including the date, time, location, drainage basin, type of overflow, quantity, cause, rainfall event, and receiving waters. A summary of all SSO's reported by the Highland Sanitary District for the years 2014-2023 can be found in **Attachment E**.

The 2023 report also included a summary of progress that was made on work and associated deadlines which the Highland Sanitary District completed as required by the Consent Decree. This includes payment of civil penalties, progress of implementing SSO remedial measures, SSO flow monitoring and reporting, and updating the public website. A summary of all progress reports from 2014-2023 (07/31/23) can also be found in **Attachment E.**

The website for Highland's Sanitary District can be found at https://www.highland.in.gov/sanitary-district/highland-consent-decree/. Below is a snapshot.

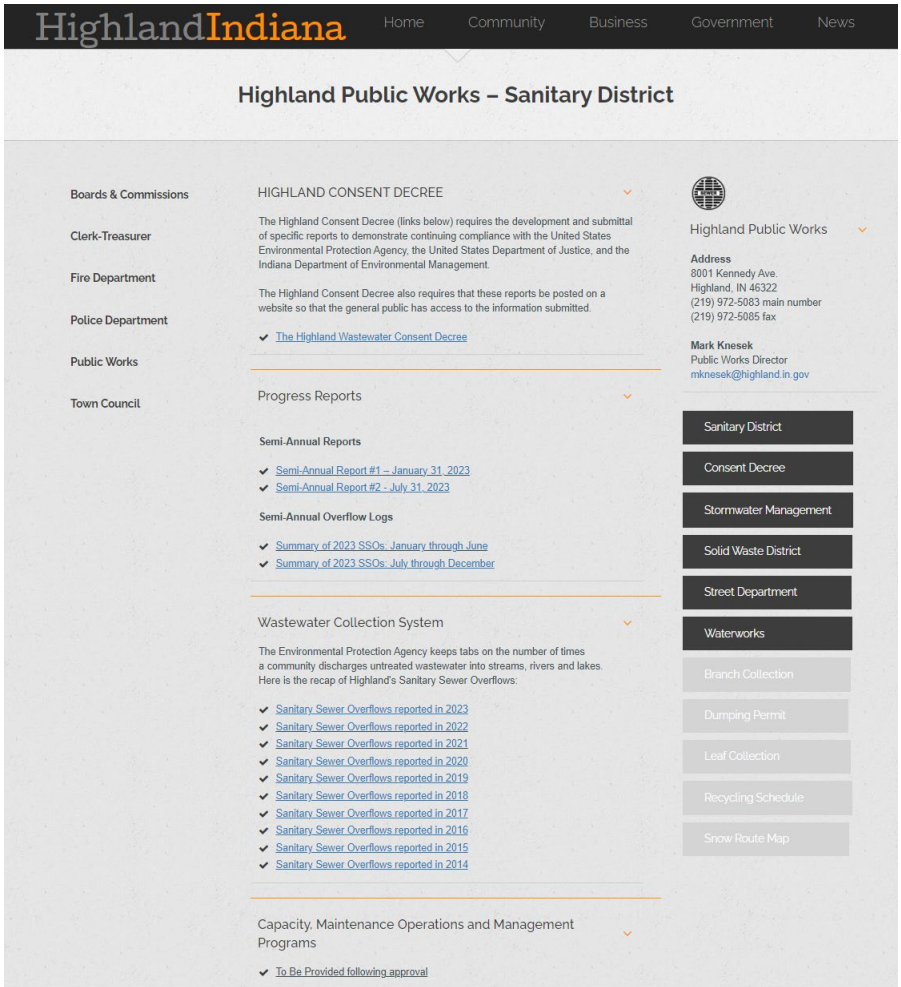

2.5 Management Information Services

Highland maintains adequate administrative documents, compliance, operational, and maintenance reports and records mostly on a computer system, but some are still done by hand. The Management Information System is updated when time permits. Record retention policies will comply with the terms in the Consent Decree Paragraph 71: *From the Date of Lodging until **two years** after the termination of this Decree, Highland shall retain, and shall instruct its contractors and agents to preserve, all non-identical copies of all documents, records, or other information (including documents, records, or other information in electronic form) in its or its contractors' or agents' possession or control, or that come into its or its contractors' or agents' possession or control, that relate to Highland's performance of its obligations under this Decree. Such records shall include relevant modeling inputs and outputs, flow data, rainfall data, inspection records, cleaning records, construction plans or as-built drawings, specifications, construction contracts, final payments and notices of completion, and all reports or plans, in additional to records or documents, as specified by either of the Plaintiffs from time to time, that are necessary to evaluate Highland's performance of its obligations under this Decree. This information-retention requirement shall apply regardless of any contrary corporate or institutional policies or procedures. At any time during this information-retention period, upon request*

by the United States or the State, Highland shall provide copies of any documents, records, or other information required to be maintained under this Paragraph.

Highland is moving in the direction of maintaining all records digitally and is currently evaluating a work order database. **Table 2-1** shows a summary of the sanitary sewer reports and records maintained by Highland. Currently SOP's for Management Information Systems are being considered for development.

Table 2-1
Management Information System Summary

DOCUMENT	CMOM ATTACHMENT	RECORD TYPE	PROGRAMS USED	FREQUENCY
Complaint Log	D	Electronic	Excel	Per Incident
Sanitary Sewer Overflow Report Summary	E	Electronic	Word	Annual
Sanitary Sewer Overflow Report	F-A	Manual	PDF	Per Incident
Bypass Pumping Log	F-B	Manual	Paper/Word/PDF	Per Incident
IDEM Bypass Overflow Incident Report	G	Electronic	Word/PDF	Per Incident
Pump Station Check Log	N	Manual	Paper/Excel/PDF	Weekly
Sanitary Station Checks	N	Manual	Paper/Excel/PDF	Weekly
SCADA Pump Hour Checks	N	Manual	Paper/Excel/PDF	Daily
Generator Inspection Form	O	Manual	Paper/Excel/PDF	Weekly
Cleaning Schedule for Storm and Sanitary Tanks	P	Manual	Paper/Excel/PDF	5-10 Yrs

2.6 SSO Notification Program

A. Overflow Emergency Response Plan (OERP)

Pursuant to the Order of the United States Environmental Protection Agency (USEPA), Highland is required to implement procedures to report all SSOs and provide emergency response for protection of public health, public notification, SSO cleanup, and mitigation of SSO impact. A summary of all SSOs reported by the Highland Sanitary District for the years 2014 - 2023 can be found in **Attachment E**.

Highland's collection system has been identified as a separate sanitary sewer system by the USEPA and Indiana Department of Environmental Management (IDEM). Highland operates and manages the collection system and conveys sanitary wastewater to the Hammond Sanitary District for treatment from the North 5th Street Sanitary Sewer Lift Station and the 81st Street Sanitary Sewer Lift Station.

In the event of a reportable spill as defined by 327 IAC 2-6.1-4, Highland must contact the IDEM Emergency 24- Hour Spill Line and submit State Form 48373. Additionally, Highland shall report all SSOs to the Lake County Health Department, IDEM and EPA in accordance with applicable requirements of

Paragraph 24 of the Consent Decree with the United States and the State of Indiana.

1. Goals and Objectives

The primary goal of Highland's Overflow Emergency Response Plan (OERP), which was established in October 2011 and updated in 2021, is to create an action plan that defines procedures for managing SSOs to protect public health and the environment, and to comply with regulatory requirements relating to SSOs. Specific objectives with respect to responding to SSOs are as follows:

- Eliminate preventable SSOs;
- Respond quickly to minimize impact, duration, and volume of the SSO;
- Provide accurate estimates to the volume of the SSO;
- Ensure corrective action is taken in a timely manner;
- Notify the proper regulatory agencies, in a timely manner, of any SSO;
- Identify and implement measures to prevent the occurrence of preventable and multiple SSOs that occur at the same general location,
- Document and define procedures to address SSO prevention and response;
- Provide uniform, clear, and consistent policies and procedures for Highland staff to reference and follow in the event of an SSO; and
- The complete copy of Highland's Overflow Emergency Response Plan can be found in **Attachment F**.

2. Overflow Response Procedure

The Overflow Response Procedure provides a strategy for Highland to mobilize labor, materials, tools, and equipment to correct, repair or mitigate any condition which may cause or contribute to an unpermitted discharge. The plan considers a wide range of potential system failures that could create an overflow to surface waters, land, or buildings.

Confirmed or suspected SSOs may be reported by Highland employees or by others (i.e. business owners, residents, plumbers, etc.) by calling the Highland Public Works Department at (219) 972-5083. The Public Works Attendant is primarily responsible for receiving phone calls regarding possible sewer overflows during regular business hours (i.e. Monday through Friday from 7:00 am to 4:00 pm) and is responsible for notifying the Person-In-Charge (PIC) to respond to any given field situation. After hours, all calls go to the Lake County Sheriffs Dept. which notifies the on-call PIC. The PIC is then responsible as a primary responder to notify the

regulatory agencies, activate and monitor the Spill Response Crew and ensure that a report for the spill is prepared. The expected after-hours response time is one (1) hour.

3. Dispatch of Appropriate Crews to Site of Sewer Overflow

Failure of any element within the wastewater collection system that threatens to cause or causes an SSO triggers an immediate response to isolate and correct the problem. Crews and equipment are available to respond to any SSO location. Crews shall dispatch to any site of a reported SSO immediately. Also, additional maintenance personnel shall be "on call" in the event extra crews are needed.

4. Overflow Correction, Containment, Mitigation and Clean-Up

SSOs of various volumes occur periodically despite concerted prevention efforts. Spills may result from blocked sewers, pipe failures, mechanical malfunctions, or other natural or man-made causes. This section describes specific actions to be performed by the crews during an SSO. The objectives of these actions are as follows:

- Protect public health, environment, and property from sewage overflows by correcting the condition causing the overflow and restoring the surrounding area back to normal as soon as possible;
- Establish perimeters and control zones with appropriate traffic cones and barricades, vehicles, or use of natural topography (e.g., hills, berms) to contain the spill;
- Promptly notify the Public Works Director of preliminary overflow information and potential impacts;
- Contain the sewer overflow to the maximum extent possible including preventing or minimizing the discharge of sewage into surface waters;
- Provide spill cleanup whenever possible; and
- Minimize Highland's exposure to any regulatory agency penalties and fines.

Under most circumstances, the Public Works Department can handle all response actions with its own maintenance forces. Public Works personnel have the skills and experience to respond rapidly and in the most appropriate manner. An important issue with respect to an emergency response is to ensure that the temporary actions necessary to divert flows and repair the problem do not produce a problem elsewhere in the system. For example, when a large sewer main is blocked and the crews divert the flow to a smaller sewer pipe downstream of the blockage, they should observe the flows to ensure that the blockage does not recur downstream.

The sewer conveyance system should be returned to the normal operation as soon as the blockage is removed.

5. Public Advisory Procedure

This section describes Highland's actions, in cooperation with the Lake County Health Department, to limit public access to areas potentially impacted by unpermitted discharges of pollutants to surface water bodies from the wastewater collection system.

a. Temporary Signage

Highland will coordinate with the Lake County Health Department to determine when to post notices of polluted surface water bodies or ground surfaces that result from uncontrolled wastewater discharges from its facilities. The postings do not necessarily prohibit use of recreational areas, unless posted otherwise, but provide a warning of potential public health risks due to sewage contamination. The Public Works Director shall determine if posting of a confirmed overflow is undertaken.

Creeks, streams, and other public access locations that have been contaminated as a result of an SSO should be posted at visible access locations until the risk of contamination has subsided to acceptable background levels.

The warning signs, once posted, should be checked every day to ensure that they are still in place. "Closed" signs shall be posted at the outfall and a minimum of one hundred (100) feet upstream and one hundred (100) feet downstream of the discharge. If there is a large volume of sewage, more signs must be posted downstream. Signs must remain posted for seventy-two (72) hours following the end of a SSO, or longer if required by the Lake County Health Department.

b. Other Public Notification

Should the posting of surface water bodies or ground surfaces subjected to a sewer overflow be deemed necessary by the Lake County Health Department, the Public Works Director shall determine the need for further public notification through the use of pre-scripted notices made available to the printed or electronic news media for immediate publication or airing, or by other measures (e.g., front door hangers).

6. Regulatory Notification Procedure

This section establishes procedures which Highland follows to provide formal notice to regulatory agencies in the event of SSOs.

a. Immediate Notification to Lake County for SSO

Immediately (within one hour) contact the Lake County Health Department at (219) 755-3655 and advise that Highland is experiencing an SSO, giving the location, receiving water, and estimated volume of SSO.

b. Notification if Fish Kill is Observed

Immediately (within one hour of observing a fish kill) contact the IDEM, Emergency Response Spill Line at (888) 233-7745 and advise that Highland is experiencing an SSO that may have resulted in an observed fish kill. Provide the location, receiving water and estimated volume of SSO.

c. At Conclusion of SSO

The PIC shall ensure that written reports, as required are submitted to the Sanitary District Superintendent within twenty-four (24) hours following the bypass event.

d. Written Report to IDEM Within 5 Calendar Days.

Within twenty-four (24) hours, the Public Works Director or designee shall file a written report to the IDEM, by facsimile at (317) 232-8637 or by email at wwreports@IDEM.IN.gov, with a copy to the USEPA, Region 5 at r5weca@epa.gov. The report shall be on State Form 48373 provided by the IDEM as shown in **Attachment G** and include the following:

- Location of the SSO.
- The receiving water, if any.
- Estimated volume of the SSO.
- Description of the sewer component from which the release occurred.
- Estimated date and time when the overflow began and stopped or will be stopped.
- Caused or suspected cause of the overflow.
- Steps to be taken to reduce, eliminate, and prevent reoccurrence of the overflow and schedule of major milestones for those steps.
- Steps taken or planned to mitigate the impact(s) of the overflow and a schedule of milestones for those steps.

B. Website Outreach

As discussed in Section 2.4.B, the Town of Highland maintains a website that the District uses for posting annual reports such as the Sanitary Sewer Overflow Report. Currently, the website contains SSO reports for the years 2014 – 2023. Information is updated after each calendar year. **Within 30 Days of the Effective Date of the Consent Decree, Highland shall post on its Website a completed**

State Form 48373 after each SSO that occurs. These reports shall be posted on the Website within twenty-four (24) hours of submitting to IDEM State Form 48373. SSO reports will be posted semi-annually by July 31st (for the reporting period of January – June) and January 31st (for the reporting period of July – December) .

The SSO report contains specific information on each overflow event including the date, time, location, drainage basin, type of overflow, quantity, cause, rainfall event, and receiving waters. The website for Highland's Sanitary District can be found at:

https://www.highland.in.gov/sanitary-district/highland-consent-decree/

2.7 Legal Authority

A. Sewer Use Ordinance

In Indiana, cities and towns are allowed to create laws that are unique to the municipality as long as they are not in conflict with existing state laws. Known as ordinances, these laws are passed by a majority vote of the Town Council during a public meeting.

The Highland Sewer Use Ordinance is defined in Chapter 12.20 of Municipal Code and enforced by the Highland Department of Public Works. This ordinance defines the regulations pertaining to sewers and sewage disposal for the Highland Sanitary District. The ordinance is broken out into five (5) Articles, which cover General Provisions, Building Sewers and Connections, Discharge Regulations, User Rates and Charges, and the Sewer and Extension Fund. A copy of Highland's Sewer Use Ordinance can be found in **Attachment H**. Several sections of the code are included below and are followed by a description of how each provision can be used to minimize SSOs.

Section 12.20.210 states that "*No person shall discharge or cause to be discharged any storm water, surface water, ground water, roof runoff or subsurface drainage to any sanitary sewer. Storm water and all other unpolluted waters shall be discharged to such sewers as are specifically designated as storm sewers, or to a natural outlet approved by proper authorities*."

This provision is intended to reduce inflow discharged to the sanitary sewer system.

Section 12.20.220 defines harmful wastes that are totally prohibited as "*Solid or viscous substances in quantities or of such size capable of causing obstruction to the flow in sewers, or other interference with the proper operation of the sewage works such as, but not limited to, ashes, cinders, sand, mud, straw, shavings, metal, glass, rags, feathers, tar, plastics, wood, unground garbage, whole blood, paunch manure, hair and fleshings, entrails and paper dishes, cups, milk containers, and the like, either whole or ground by garbage grinders*."

This provision is intended to minimize the discharge of solids to the sanitary sewer

system as to avoid collection system clogging and maintenance issues that may result a sewer backup and/or SSO event.

Section 12.20.230 defines discharges the superintendent may regulate or prohibit as the admission into the public sewers of any waters or wastes containing:

- "*More than 260 milligrams per liter by weight of suspended solids.*
- *Garbage that has not been properly shredded.*
- *An average daily flow greater than five percent of the average daily sewage flow of the district shall be subject to the review and approval of the Superintendent.*
- *Wastes exceeding the following maximum allowable limits: 2.0 mg/l of boron, 10.0 mg/l of chromium (hexavalent), 25.0 mg/l of chromium (trivalent), 5.0 mg/l of copper, 10.0 mg/l of cyanide, 50 mg/l of iron fez, 0.5 mg/l of lead, 10.0 mg/l of nickel, 100 mg/l of oil and grease, and the like (hexane solubles), temperature not over 150 degrees Fahrenheit (65 degrees centigrade), free acids and alkalis pH between 5.0 and 9.5, 10.0 mg/l of zinc, 2.0 mg/l of cadmium, and 30.0 mg/l of chlorine demand.*
- *Materials which exert or cause unusual concentration of inert, suspended solids (such as, but not limited to, fuller's earth, lime slurries and lime residues) or of dissolved solids (such as, but not limited to, sodium chloride and sodium sulfate).*
- *Materials which exert or cause unusual volume of flow or concentration of wastes constituting "slugs".*
- *Substances which are not amenable to treatment or reduction by the sewage treatment processes employed or are amenable to treatment only to such degree that the sewage treatment plant effluent cannot meet the requirements of other agencies having jurisdiction over discharge to the receiving waters*."

These provisions are intended to protect the sewage collection system infrastructure and/or Hammond treatment facilities. These provisions are also in place to ensure that proper review is conducted so that facilities are not overloaded by flow, solids, or other pollutants.

Section 12.20.240 states that if the superintendent permits the pretreatment of waste flows that "*Where preliminary treatment facilities are provided for any waters or wastes, they shall be maintained continuously in satisfactory and effective operation by the owner at his expense. Plans, specifications, and any other pertinent information relating to pretreatment or control facilities shall be submitted for approval of the district and the state, and no construction of such facilities shall be commenced until approval in writing is granted. Where such facilities are provided, they shall be maintained continuously in satisfactory and effective operating order by the owner at his expense and shall be subject to periodic inspection by the district to determine that such facilities are being operated in*

conformance with applicable federal, state and local laws and permits. The owner shall maintain operating records and shall submit to the district a monthly summary report of the character of the influent and effluent to show the performance of the treatment facilities and for comparison against district monitoring records."

Such provisions allow the Superintendent to require pretreatment of wastes if deemed to be necessary to protect Highland's infrastructure and to minimize the risk of SSOs. These provisions also require pretreatment to be maintained, accessible for inspection, and waste discharged to be monitored as required by Highland.

Section 12.20.250 states that inspection, and the like, on nonresidential discharges can be conducted on "*Any industrial wastes discharged into the public sewers shall be subject to periodic inspection and determination of volume, character and concentration. The examination shall be made as often as the superintendent deems it necessary and may include the use of suitable continuously monitoring instruments in appropriate cases. Samples shall be collected either manually or by approved mechanical devices and in such a manner as to be representative of the overall composition of the wastes. Every care shall be exercised in collecting the samples to ensure their preservation, until analyzed, in a state comparable to that at the time the samples were collected*."

The language in this provision is intended to allow Highland to inspect facilities and collect samples as required to ensure compliance with the ordinance and to minimize the risk of waste that may result in SSOs.

Section 12.20.260 outlines the requirements for flow measuring and sampling facilities "*The installation, operation and maintenance of the flow measuring and sampling facilities shall be the responsibility of the person discharging the wastes and shall be subject to the approval of the superintendent. When required by the superintendent, the owner of any property served by a building sewer carrying industrial wastes shall install a suitable control manhole in the building sewer to facilitate observation sampling and measurement of the wastes. Such manhole, when required, shall be accessible and safely located, and shall be constructed in accordance with plans approved by the superintendent. The manhole shall be installed by the owner at his expense and shall be maintained by him so as to be safe and accessible at all times*".

Similar to Section 12.20.250, the language in this provision is intended to allow Highland to inspect facilities and collect samples as required to ensure compliance with the ordinance and to minimize the risk of waste that may result in SSOs.

B. FOG Program

Highland's Fat, Oil & Grease (FOG) Program is described in the Municipal Code Article III (Discharge Regulations) Chapter 12.20 (Sewers and Sewage Disposal) and administered by the Building Department through the permitting process.

Highland is a suburban community which does not have heavy industry users that produce significant amounts of oil and grease. There are less than one hundred (100) regulated entities in Highland's regulated FOG program and most, if not all, of the restaurant and food processor regulate entities have a grease trap installed. The sections of the code that pertain to the FOG program are listed below.

Section 12.20.230 defines discharges the superintendent may regulate or prohibit as "*The admission into the public sewers of any waters or wastes exceeding the following maximum allowable limits: 100 mg/l of oil and grease, and the like (hexane solubles), and temperature not over 150 degrees Fahrenheit (65 degrees centigrade)*."

This provision explicitly applies numeric standards to FOG discharges such that Highland can require controls (i.e. grease tramps) and enforce its ordinance. The implementation and/or enforcement of this provision allows Highland to minimize FOG in concentrations that cause blockages that may result in an SSO.

Section 12.20.240 states that if the superintendent permits the pretreatment of waste flows that "*Plans, specifications, and any other pertinent information relating to pretreatment or control facilities shall be submitted for approval of the district and the state, and no construction of such facilities shall be commenced until approval in writing is granted. Where such facilities are provided, they shall be maintained continuously in satisfactory and effective operating order by the owner at his expense and shall be subject to periodic inspection by the district to determine that such facilities are being operated in conformance with applicable federal, state and local laws and permits. The owner shall maintain operating records and shall submit to the district a monthly summary report of the character of the influent and effluent to show the performance of the treatment facilities and for comparison against district monitoring records.*"

This provision provides Highland with the authority to require FOG controls as to minimize discharges that have the potential to result in blockages that may lead to SSOs.

Section 12.20.270 defines when interceptors shall be provided. "*Fat, grease, oil and sand interceptors shall be provided when, in the opinion of the superintendent, they are necessary for the proper handling of liquid wastes containing grease in excessive amounts, or any flammable wastes, sand and other harmful ingredients. All interceptors shall be of a type and capacity approved by the superintendent and shall be located so as to be readily and easily accessible for cleaning and inspection. Approval of any such interceptors by the superintendent shall not relieve any person of the responsibility of complying with the discharge requirements of this article. Fat, grease, oil and sand interceptors shall be constructed of impervious materials capable of withstanding abrupt and extreme changes in temperature. They shall be of substantial construction, water-tight and equipped with easily removable covers which when bolted in place shall be gas-tight and water-tight. Where installed, all fat, grease, oil and sand interceptors shall*

be maintained by the owner, at his expense, in continuously efficient operation at all times."

This provision allows Highland to mandate the installation of FOG control devices in order to minimize the discharge of FOG in concentrations that may cause sanitary sewer collection system issues.

Section 3 – Collection System Operations

3.1 Budgeting

The Highland Sanitary District generates revenue from fees charged to manage wastewater, stormwater and solid waste for the sewer district. Budgets are developed on an annual basis by Highland with each respective department participating in the process. (ie: O&M staff is involved in the O&M budget). Descriptions of the various expenses, funds, and revenues for Highland can be found in the Municipal Code (**Attachment H**).

A. Fee Summary

The fees must be just and equitable and shall be paid by any user of the sewage works and the owner of every lot, parcel of real property, or building that is connected with and uses the sewage works of the District by or through any part of the sewerage system. The fees, together with the taxes levied under this chapter, must be sufficient to produce revenues sufficient to fund operation, maintenance, and administrative expenses, to pay the principal and interest on bonds as they become due and payable, and to provide money for the revolving fund. The basis for fees for the treatment and disposal of sewage may be based on:

- A flat charge for each sewer connection;
- The amount of water used on the premises;
- The number and size of water outlets on the premises;
- The amount, strength, or character of sewage discharged into the sewers;
- The size of sewer connections; or
- Any combination of these factors or other factors that the board determines necessary in order to establish just and equitable rates and charges.

In order that the rates and charges for sewage services may remain fair and equitable and be in proportion of the cost of providing services to the various users or user classes, the District shall initiate an annual study to be made within a reasonable period of time following the normal accounting period. Such study shall include, but not be limited to, an analysis of the costs associated with the treatment of excessive strength effluents from industrial users or user classes, the financial position of the sewage works and the adequacy of its revenue to provide reasonable funds for operation, maintenance and replacements to the sewerage system. Said studies shall be conducted by officers or employees of the District or by a firm of certified public accountants, or a firm of consulting engineers, which firms shall have experience in such studies, or by such combination of officers, employees, certified public accountants, or engineers as the district shall determine to be the best under the circumstances.

B. Rate Ordinance

Highland periodically reviews its rates and charges to ensure adequacy. In 2023, the Highland Sanitary District (District) retained a financial consultant to conduct a rate study. That study resulted in a rate increase per 1,000 gallons starting in 2023 through 2026, that was approved by the Highland Town Council on August 1, 2023. The last rate increase was approved on December 28, 2020.. Indiana law requires that the municipal legislative body shall, by ordinance, establish just and equitable fees for the services rendered by the sewage works. Just and equitable fees are the fees required to maintain the sewage works in the sound physical and financial condition necessary to render adequate and efficient service. The fees must be sufficient to: (1) pay all expenses incidental to the operation of the works, including legal expenses, maintenance costs, operating charges, repairs, lease rentals, and interest charges on bonds or other obligations; (2) provide a sinking fund; (3) provide adequate money to be used as working capital; and (4) provide adequate money for improving and replacing the works. Furthermore, the Highland Municipal Code requires that the Sanitary District conduct an annual review of rates and charges for sewage services in order that they remain fair and equitable and be in proportion of the cost of providing services to the various users or user classes. Pursuant to this mandate by the Indiana Code and the Highland Municipal Code, the Highland Sanitary District regularly reviews its rates and charges to ensure that all of the aforementioned requirements are met. The Highland Clerk Treasurer provides financial reports to the Sanitary District on a monthly basis. This report provides a comparison to previous year financial data. Whenever the financial report indicates that the various municipal funds attributable to the District are not able to be maintained at their target levels, the Sanitary District engages a financial consultant to conduct a rate study to determine whether a rate increase is required.

The most recent rate ordinance has been included in **Attachment I** if further detail is desired. A summary of the monthly base rates and charges for wastewater treatment and management services are show below in **Table 3-1**.

Table 3-1
Monthly Base Rates

Meter Size	Base-Rate Total
5/8"	$8.42
3/4"	$12.62
1"	$21.43
1 1/4"	$33.52
1 1/2"	$47.40
2"	$82.15
3"	$186.49
4"	$331.37

A monthly rate based upon metered usage, per 1,000 metered gallons, for the following schedule of rates:

Table 3-2

Monthly Rate Based on Metered Usage, Per 1,000 Metered Gallons

Year	Base Rate
2023	$7.27 per unit
2024	$7.56 per unit
2025	$7.86 per unit
2026	$8.16 per unit

An additional surcharge for each dwelling unit over one serviced through a single water meter shall be added to the above rates.

Table 3-3

Additional Surcharge

Year	Surcharge
2023	$8.49 per unit
2024	$8.49 per unit
2025	$8.49 per unit
2026	$8.49 per unit

For users of the sewage works that are unmetered users of the municipal water works, the monthly charge shall be determined by equivalent single-family residential units, except as otherwise herein provided. The schedule on which said rates shall be determined is as follows:

Table 3-4

Monthly Rate for Unmetered Usage

Year	Rate
2023	$56.01 per unit
2024	$57.17 per unit
2025	$58.37 per unit
2026	$59.57 per unit

C. Disposition of Funds

User charges collected for wastewater and storm water treatment are deposited on a net-revenue basis to three primary Funds: Sewage Operating Fund, Sewer

Improvement Fund and Sewage Cash Reserve Fund. After all monthly expenses are paid, net revenue is first posted to the Sewage Operating Fund, which is used to operate and maintain the system for day-to-day expenses such as supplies, services, employees, and benefits. The amount posted to this Fund is the lesser of either the total net revenue amount or the amount necessary to return the Sewage Operating Fund to a target balance of $700,000. Any remaining revenue is then posted to the Sewer Improvement Fund, which is used for expenses related to system upgrades, maintenance, and rehabilitation. The amount posted to this Fund is the lesser of either the remaining revenue amount or the amount necessary to return the Sewer Improvement Fund to a target balance of $800,000. Any remaining revenue is posted to the Sewage Cash Reserve Fund as surplus earnings. Transfers from this fund to the municipal general fund are made in accordance with HMC Section 12.10.110 and IC 8-1.5-3-11 as a means of providing the municipality with a reasonable return on the sewage utility plant of the municipality. Major projects outside the scope of the funds mentioned above are paid for through the Capital Improvement Fund, which consists of capital raised from bonds issued by the Highland Sanitary District. Fund balances for the years 2016 - 2022 is shown in **Table 3-2**. Expenditures by fund are shown in **Table 3-3**. Highland financial reports from 2016 - 2022 can be found in **Attachment J**.

Table 3-5
Fund Balances 2016 - 2022
As of December 31 Each Year

Year	Sewer Operating Fund	Sewer Improvement Fund	Sewer Cash Reserve	Capital Reserve Fund
2016	$700,000	$800,000	$225,271	$6,931,282
2017	$700,000	$727,144	$602,703	$4,473,112
2018	$700,000	$258,384	$541,985	$3,207,783
2019	$700,000	$247,344	$106,821	$2,142,246
2020	$700,000	$760,510	$1,821	$1,308,472
2021	$700,000	$800,000	$2,463,491	$285.746
2022	$700,000	$1,589,517	$3,119,119	$255.012

Table 3-6
Expenditures by Fund 2016 - 2022

Year	Sewer Operating Fund	Sewer Improvement Fund
2016	$3,464,343	$404,658
2017	$4,030,571	$330,966
2018	$4,134,278	$1,051,037
2019	$3,872,602	$517,719
2020	$3,531,406	$143,926
2021	$3,344,882	$368,398
2022	$3,638,417	$954,676

D. Charges from Hammond Sanitary District

Sewage collected by Highland presently flows to the Hammond Sanitary District for treatment. The Hammond Sanitary District bills the Highland Sanitary District for treatment of sewage. The charge for transportation and treatment of Highland wastewater from Hammond for the years 2016 - 2022 is shown in **Table 3-4**. A copy of the Sewage Collection and Treatment Agreement with Hammond can be found in **Attachment K.**

Table 3-7
Highland Billed Treatment to Hammond Sewer District 2016-2022

Year	Billed (MG)	Charges
2016	1198.711	$1,027,191
2017	1191.762	$1,324,042
2018	1216.285	$1,459,626
2019	1411.893	$1,699,156
2020	1248.466	$1,497,944
2021	902.080	$1,082,573
2022	970.150	$1,771,779

3.2 Hydrogen Sulfide Monitoring and Control

Although hydrogen sulfide (H_2S) has not been observed as a major problem in the Highland collection system and odors are not a frequent source of complaints, portable multigas detectors manufactured by MSA are used to monitor H_2S concentrations in the system in order to ensure the safety of staff and the public. When designing sewers, Ten

States Standards and 327 IAC regulations pertaining to sewer slope are followed to minimize hydrogen sulfide corrosion.

Currently, the 37th Street Equalization Basin is the only location that odor control equipment is being used. The unit being used is a Pure Air Filtration DS100 Odor Drum Scrubber consisting of a 55-gallon polyethylene drum containing dry media with a blower mounted on grade with a sound enclosure. The dry media consists of porous, cylindrical pellets of high grade bituminous activated carbon. O&M information for this unit can be found in **Attachment T**.

3.3 Safety

Safety training is provided at weekly meetings on subjects such as air monitoring, cold weather, confined space entry, substance abuse, electricity, fire prevention, first aid, portable electric tools, slips, trips, and falls, etc. **Attachment C** shows the safety training that was conducted for 2017 - 2023. A Hazards Communication Plan poster in displayed in the office for employees to review and have readily available. Formal "Workplace Safety Rules" are documented on pages 74 - 75 of the Municipal Employee Handbook which can be found in **Attachment L**. **Attachment V** shows training for confined space entry. Injury reports can be found in **Attachment W**.

3.4 Emergency Preparedness and Response

In the event of emergency, Highland's Emergency Disaster Plan is followed. As part of this plan, the designated Emergency Operations Center (EOC) is the location where all department heads meet to coordinate the response to the event. The disaster plan is maintained and directed by the Highland Fire Department in conjunction with the Homeland Security Department. Regular training is conducted by the fire department throughout the year for emergency response and rescue. The Emergency Disaster Plan is confidential and unavailable to the public due to regulations by the Homeland Security Department.

Protocols set forth in the Overflow Emergency Response Plan as discussed in **Section 2.6** are followed in the event of a sanitary sewer overflow event. The Overflow Emergency Response Plan can be reviewed in greater detail in **Attachment F**.

3.5 Modeling

A. Hydraulic Modelling Overview

In 2016, a hydraulic model that accurately represents Highland's sanitary collection system was developed to evaluate planning-level alternative solutions to eliminate Sanitary Sewer Overflows (SSOs) up to a defined level of control. Since the 2016 modeling effort, Highland has collected rainfall and flow metering data and has experienced several significant wet weather events. As a part of the SSO Remedial Project - Phases I and II Preliminary Engineering Report, the hydraulic model was recalibrated to ensure that the preliminary engineering alternative solutions are properly sized. The hydraulic model was developed and recalibrated using the United States Environmental Agency's (USEPA) hydraulic modeling

program SWMM5 computational engine. The model is well calibrated to dry and wet weather events and is suitable for preliminary engineering alternative analyses. The Graphical User Interface (GUI) for the SWMM program has Geographical Information System (GIS) capabilities, which can be used to enhance the analysis of the modelling results.

An accurate source of rainfall and flow meter data is necessary to develop a calibrated hydraulic model for the collection system. Highland maintains a network of rainfall gauges within their system as well as permanent magnetic flow meters at each primary lift station. The flow meters are typically checked once and month or after a rain event. All low points and flood-plain areas are monitored during rain events. Flow monitoring records include a descriptive location of flow meter, type of flow meter, frequency of flow meter inspection, and frequency of flow meter calibration. Since the 2016 SWMM Report, Highland has performed extensive flow monitoring throughout the collection system via area-velocity meters. **Table 3-1** provides a summary of the temporary and permanent flow meters. In addition, Highland maintains a network of rain gauges. **Figure 3-1** depicts the location of the six (6) rainfall gauges, permanent and temporary flow meters, and the contributary area to each flow meter. All six (6) of Highland's rain gauges were used during model calibration.

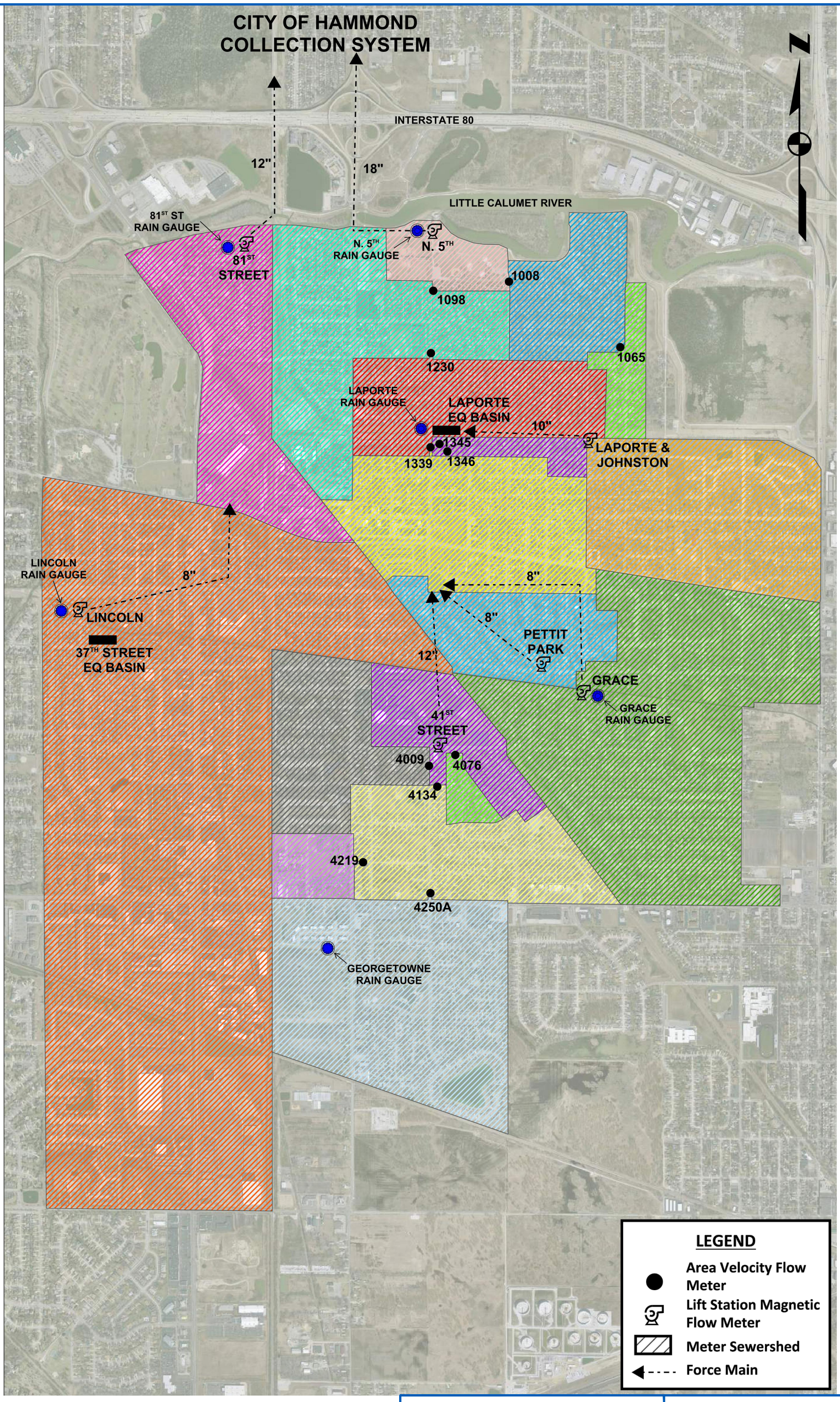

COMMONWEALTH ENGINEERS, INC.

TOWN OF HIGHLAND

FIGURE 3-1

FLOW METER SUBBASINS

Table 3-8
Summary of Collection System Flow Meters

Location in the Collection System (Manhole #)	Temporary / Permanent	Pipe Diameter (in)	Meter Location (Influent / Effluent)
1001* (N.5th Street)	Permanent	18	Effluent
1008	Temporary	21	Influent
1065	Temporary	8	Influent
1098	Temporary	24	Influent
1230	Temporary	24	Influent
1230 - Cross-Connect	Temporary	10	Effluent
1339	Temporary	21	Influent
1345 - Cross-Connect	Temporary	12	Effluent
1346	Temporary	21	Effluent
Laporte EQ Basin**	Permanent	N/A	Effluent
2000* (Laporte Street)	Permanent	10	Effluent
3000* (Grace Street)	Permanent	8	Effluent
4000* (41st Street)	Permanent	12	Effluent
4009	Temporary	15	Influent
4076	Temporary	8	Influent
4134	Temporary	8	Influent
4219	Temporary	12	Influent
4250A	Temporary	24	Influent
6000* (81st Street)	Permanent	12	Effluent
7000* (Lincoln Street)	Permanent	8	Effluent

* Permanent lift station magnetic flow meter.
** Depth only meter.
*** Cross-Connect 1098 – Plugged on April 4, 2018.

B. Baseline Hydraulic Assessment

Upon completing the dry and wet weather calibration and validation of Highland's collection system model, the existing system was analyzed with the goal of identifying trouble spots in the existing collection system. Modeling results for existing conditions indicate that the collection system can adequately convey flow during dry weather conditions. However, during wet weather conditions, the existing system becomes hydraulically stressed. The unpermitted sanitary-to-storm cross-connects become active and several lift stations cannot keep up with the peak flows reaching the station. **Figure 3-2** illustrates the peak depth of the flow and potential flooding locations. As shown, Highland's collection system is significantly impaired with its current infrastructure for significant wet weather events

C. Future Growth

After completing the baseline hydraulic assessment of the existing collection system, the calibrated and validated model was adjusted to account for future growth conditions. Future growth estimates were based on information provided by Highland, regarding homes connected to a septic tank sewer system and potential residential build-out (see **Figure 3-3**).

Dry and wet weather flows associated with long-term future growth were increased proportionality in the SWMM model based on the future growth projects. Approximately 0.24 MGD of additional average dry weather flow and approximately 183 acres of additional sewershed area were added to the hydraulic model to account for long-term future growth conditions. Rainfall derived infiltration and inflow (RDII) was added to the model in accordance with the SWMM RTK method for new development areas (primarily residential).

Upon adding the long-term future growth areas into the SWMM model, the collection system was analyzed with the goal of identifying trouble spots in the existing collection system assuming no infrastructure improvements were completed. The existing collection system is incapable of conveying future growth peak wet weather flows.

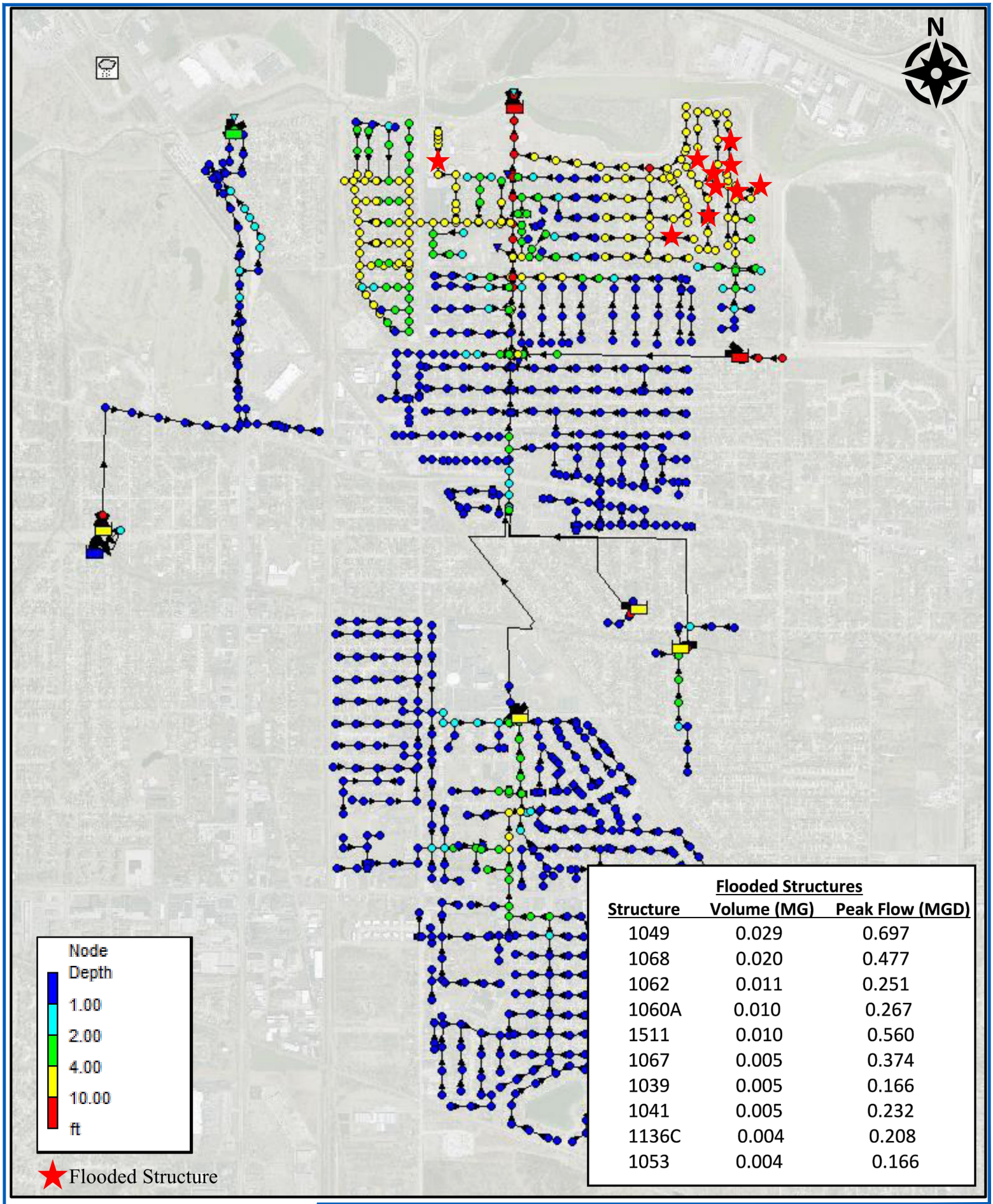

Flooded Structures

Structure	Volume (MG)	Peak Flow (MGD)
1049	0.029	0.697
1068	0.020	0.477
1062	0.011	0.251
1060A	0.010	0.267
1511	0.010	0.560
1067	0.005	0.374
1039	0.005	0.166
1041	0.005	0.232
1136C	0.004	0.208
1053	0.004	0.166

COMMONWEALTH ENGINEERS, INC.

TOWN OF HIGHLAND

FIGURE 3-2

COLLECTION SYSTEM HYDRAULICALLY STRESSED AREAS

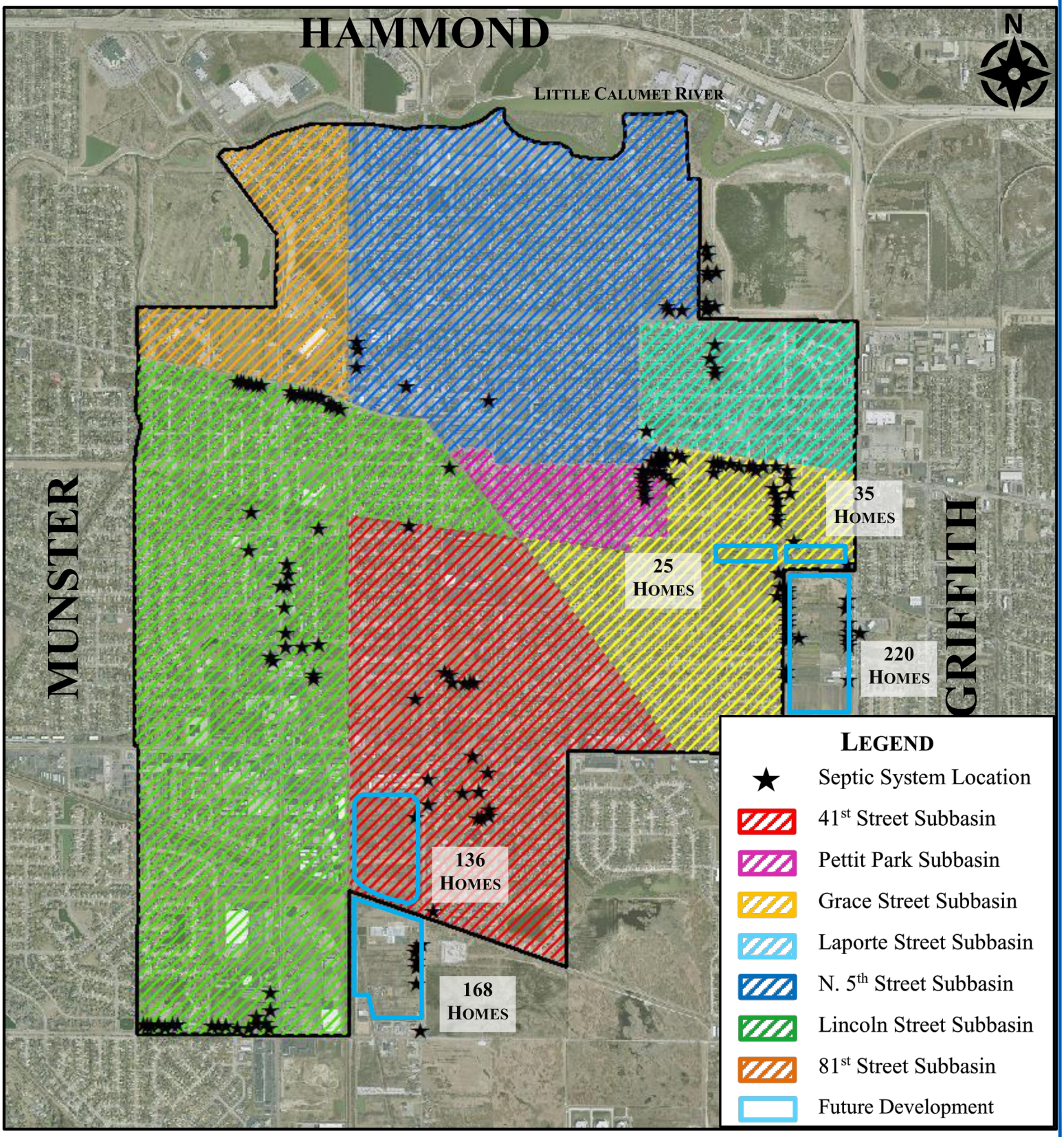

COMMONWEALTH ENGINEERS, INC.

TOWN OF HIGHLAND

FIGURE 3-3

FUTURE GROWTH

D. Health, Sanitation, and Security

Highland's sanitary sewer collection system conveys sanitary sewage from residential, commercial, and industrial sources. Hydraulic modeling indicates that the collection system, storage basins, and lift stations are capable of conveying the existing dry weather flows. However, the modeling also indicates that portions of the collection system cannot convey peak flows from large wet weather events. Sanitary sewer overflows occur in the existing collection system at the unpermitted sanitary-to-storm cross-connects, the 41st Street lift station area, and the northeastern portion of the North 5th Street sub-basin.

E. SSO Monitoring

Highland is required to implement procedures to report all SSOs. Highland must also provide public notification, emergency response for the protection of public health, SSO cleanup and mitigate SSO impact to the extent possible. Procedures to respond to and document SSOs are outlined in **Section 2.6.A - Overflow Emergency Response Plan**. The OERP, SCADA monitoring network, and staff response are all used to adequately meet these requirements.

In the event of rainstorms approaching that lead into a high-water alarm, the on-call operator will do the following:

- If on-call operator gets alerted to alarms, he or she will respond to work to assess which alarms have been activated and repair or monitor accordingly.
- If high water alarm, operator will check and monitor station.
- If high water alarm reaches thirteen (13) feet at North 5th Street Lift Station is activated, the operator will close valves at the Laporte 500,000 gallon equalization basin and allow it to fill. In addition, three (3) new level sensors in manholes #1059, #1230, and #1345 are used as an early warning device of when a structural bypass is about to occur. The operator will also start filling out forms for the wet weather event.
- The operator will monitor the system until event is under control. The operator can monitor system at Water Plant Supervisory Control and Data Acquisition (SCADA) system.
- If wet well levels continue to rise, on-call staff from the public works will be notified to monitor sewer system.
- If wet well levels reach fifteen (15) feet at the North 5th Street Lift Station, unpermitted cross connect structures 1230 and 1345 are monitored for overflows.
- If wet well levels reach twenty (20) feet, bypassing is already occurring at Duluth and Grace Place and the North 5th bypass pump is started. If

bypassing operations are required, the operator will document all start and stop times of pumping and log onto storm event form.

- If overflow or bypass pumping occurs, the Indiana Department of Environmental Management (IDEM) and the Lake County Health Department will be notified. Final forms to IDEM will be filled out and sent after totals of sewage recorded from flow meters or pump calculations by the District engineer. All flows will be documented on storm event form.

A summary of all SSOs reported by the Highland Sanitary District for the years 2014 - 2023 can be found in **Attachment E**. The Overflow Emergency Response Plan can be reviewed in greater detail in **Attachment F**.

In the event of a reportable spill as defined by 327 IAC 2-6.1-4, Highland must contact the IDEM Emergency 24- Hour Spill Line and submit State Form 48373. Additionally, Highland shall report all SSOs to the Lake County Health Department, IDEM and EPA in accordance with applicable requirements of Paragraph 24 of the Consent Decree with the United States and the State of Indiana.

3.6 Mapping

Highland maintains a Sewer Atlas in CAD format which is updated twice per year. The atlas shows force mains, pump stations, sanitary sewers/structures, and storm sewers/structures located on a base map with buildings, ditches, easements, railroads, rivers, roads, and streams. The Sewer Atlas contains “as-built” plans (record drawings) and maps which are available for use by field crews in the office and in the field.

The hydraulic model was developed and recalibrated using the USEPA hydraulic modeling program SWMM5 computational engine. The Graphical User Interface (GUI) for the SWMM program has GIS capabilities. In the past, Highland has used the SWMM model as a simplistic GIS tool.

In 2014, the Highland Sanitary District, Indiana Board of Sanitary Commissioners contracted with **RedZone Robotics, Inc**. of Pittsburgh, Pennsylvania to conduct a complete condition assessment of Highland’s sanitary sewer collection system and provide a GIS-based platform for management of the collection system assets. The televising information and Pipeline Assessment Certification Program/Manhole Assessment Certification Program (PACP/MACP) reports are incorporated into a GIS-based asset management software program called ICOM3. This program is the repository of all asset inspection records that can be viewed and managed in either an asset inventory database or GIS-based map format. The system allows for the storage and viewing of televising videos and inspection records not only for the original system-wide condition assessment, but also for future inspections that are conducted as part of Highland’s ongoing maintenance and management of its collection system. The PACP ratings from the initial system-wide condition assessment are used to generate a priority list for repairs and maintenance. As repairs are completed and assets re-inspected, a

new priority list can be generated periodically to reflect improvements to the system and re-evaluate asset conditions based on the most recent data available.

3.7 New Construction

A. Sewer Design

The Highland collection system is nearing full build-out conditions; however, if new design is required, the work is performed by consultants. NIES Engineering is currently responsible for reviewing and approving all proposed sanitary sewer extensions. CEI's Preliminary Engineering Report to mitigate SSO's includes life cycle cost analysis which is useful for comparing alternatives. As shown consistent with the Semi-annual Report requirements, Highland has begun implementing a new SSO Remedial Project. The SSO Remedial Project aims to eliminate four of the primary lift stations and provide a long-term gravity sewer solution to conveying flows to Hammond for treatment. Phase I - A of the project is beginning construction, while Phases I – B and I – C are currently in design.

B. Construction Standards and Specifications

New construction is performed by contractors, and construction standards and specifications for sanitary sewers are based on Chapter 30 of the Recommended Standards for Sewage Works (Ten State Standards) and defined in Chapter 17.30 of the Highland Municipal Code, which can be found in **Attachment M**.

C. Construction Inspection Program

Inspection is performed by Highland employees or contractors. A construction inspector is on site ninety (90) percent of the time. The Building Department is responsible for lateral inspections.

3.8 Pump Stations

Highland operates and maintains a total of eleven (11) lift stations. Six (6) are located in the 5th Street Basin and five (5) are located in the 81st Street Basin. All eleven (11) lift stations are provided with standby power generation equipment capable of running all pumps in the lift station. There are currently two (2) full-time trained personnel assigned to properly maintain pump stations.

A. Operation

All of the lift stations have control panels with programmed logic controllers (PLC) that communicate to the SCADA system. The SCADA system operation manual can be found in **Attachment X**. The pumps are set on automatic rotation to minimize wear on any one pump. Wet wells have set points established in the control logic to reduce multiple starts and stops.

There is a manual procedure established for manipulating pump operations during wet weather to increase in-line storage of wet weather flows which utilizes the two (2) equalization (EQ) tanks located in the collection system. The Laporte EQ valves can be manually closed to hold up to 500,000 gallons of sewage in the

North 5th Street sub-basin. The 37th Street equalization tank valves can also be used to store 1,000,000 gallons of wastewater to relieve the Lincoln Street lift station, which transports flows to the 81st Street lift station.

B. Inspections

Lift station inspections are conducted on daily, weekly, monthly, quarterly, six-month and yearly basis. A detailed inspection checklist for each station can be found in **Attachment N**.

Daily inspections involve checking alarms, breakers, hatches, locks, lights, oil levels, pumps, SCADA system, screens, storm stations, tanks, trash racks, water lines, and ventilation systems. During weekly inspections, generators are checked and exercised, the recorder chart for sanitary flow to Hammond is changed, and the oil trash rack is checked. Monthly checks include testing alarms, preparing sanitary reports for Hammond, storm station checks, SCADA battery checks, and removing debris from the rain gauges. Every three (3) months, the generators are inspected per contract. The six (6) months inspections involve greasing all pumps, motors, and drive shafts, changing all grease canisters on storm pumps, exercising the sluice gate, and monitoring silt in the wet wells. Yearly checks include changing oil in storm motors, testing backflow devices, servicing and testing generators, and testing all station motors and valves. The average labor hours spent on pump station inspections is fifteen (15) per week or seven hundred eighty (780) per year.

Specific to pump stations, the SCADA system is accessed and evaluated at least once per day to determine pump station efficiency and whether or not capacity has diminished. If capacity is found to be beneath normal output, staff will deploy to evaluate. Each pump station has been rehabilitated within the last 25-years.

Highland does not regularly inspect the route of force mains or perform water hammer evaluations, but the SCADA system is used to identify problems and response time is typically less than 4 hours. In the past, water hammer has been identified as the cause of failures in the force main system.

C. Emergencies

All lift stations are provided with standby power generation equipment capable of running all pumps in the lift station. Generators are exercised weekly for thirty (30) minutes, inspected quarterly, bank tested and serviced annually. Generator inspection activities are included in **Attachment O**.

D. Temporary Bypass Pump Equipment

The Highland Sanitary District is bound by the terms of a Service Agreement with the Hammond Sanitary District. If additional details are desired, the Service Agreement between Highland and Hammond has been included in **Attachment K**. The agreement allows for Highland to pump a maximum instantaneous flow of 7.5 million gallons per day (MGD) combined from the 81st Street and 5th Street Lift

Stations. However, Highland has the capacity to pump approximately 15.7 MGD with all pumps running at these two (2) lift stations. For many years, during peak wet weather flow periods, Highland would exceed the 7.5 MGD instantaneous flow limit several times a year. Approximately three (3) to four (4) years ago, Hammond determined that sanitary flows above 7.5 MGD were causing flooding in a portion of Hammond during heavy rainfall events. In late 2011 and early 2012, Hammond installed flow control valves and meters on the two (2) sanitary force mains from Highland, giving Hammond the ability to throttle flow from Highland to the 7.5 MGD limit.

In 2012, and in response to the actions by Hammond, the Highland Sanitary Board elected to purchase and install two (2), temporary bypass pumps, one (1) at the 81st Street Lift Station and one (1) at the 5th Street Lift Station. In general, the two (2) pumps were sized to pump the difference between 7.5 MGD and 15.7 MGD into the storm sewer system. This was intended to provide a means of preventing backup into the basements of homes, particularly in the 5th Street Basin. The two (2) pumps will only be used if Hammond decides to throttle flow from Highland to prevent basement backups.

The two (2) skid mounted bypass pumps have been set in place with suction piping installed, and discharge piping made up, but not connected to the discharge manhole. The 81st Street Bypass Pump has a rated capacity of 2400 gpm at forty (40) ft of head, while the 5th Street Bypass Pump has a rated capacity of 3400 gpm at forty-five (45) ft of head. Recently, Highland has also purchased a 4-inch portable pump to further assist with temporary bypass pumping.

E. Emergency Response and Monitoring

Emergency response and monitoring protocols are set forth in the Overflow Emergency Response Plan as discussed in **Section 2.6**. The complete Overflow Emergency Response Plan is included in **Attachment F**. Typical screen shots from the SCADA system are shown in **Figures 3-4(A) through 3-4(C)**.

The lift stations are monitored with a SCADA system. The parameters monitored are:

- Wet well Levels;
- High Water Levels;
- Rainfall / River Levels;
- EQ Tank Levels / Battery Voltage;
- Pump Run Time;
- Pump Flow;
- Pump Failure;
- Generator Run Time;

- Generator Failure; and
- Intrusion.

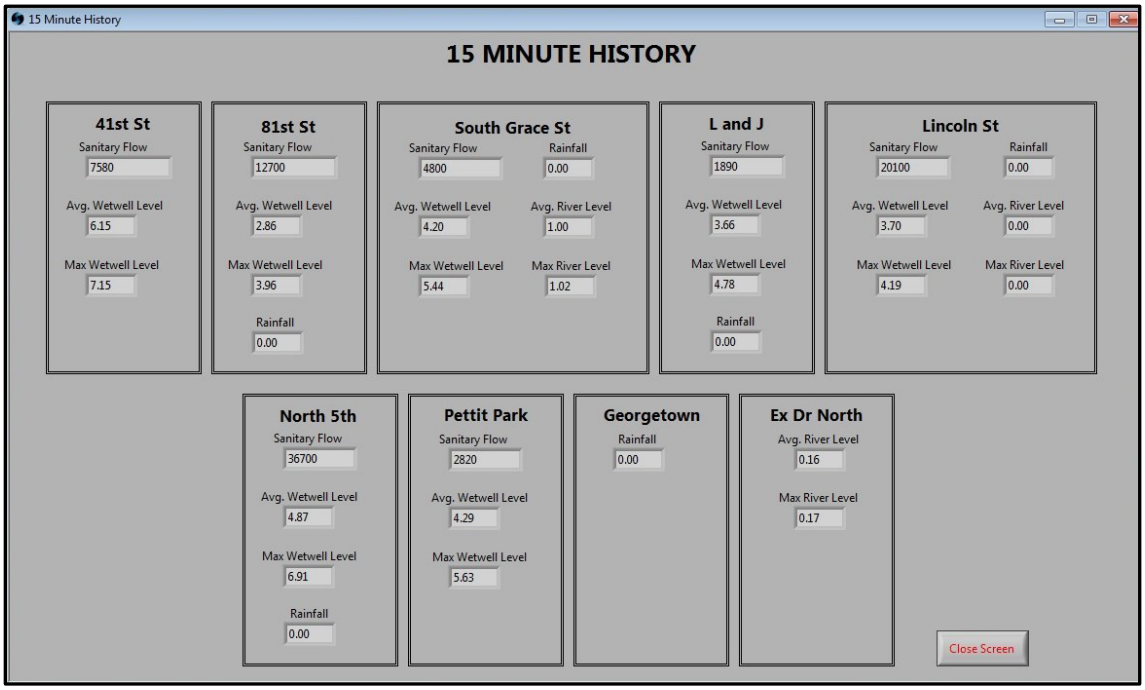

Figure 3-4 (A): Highland SCADA System

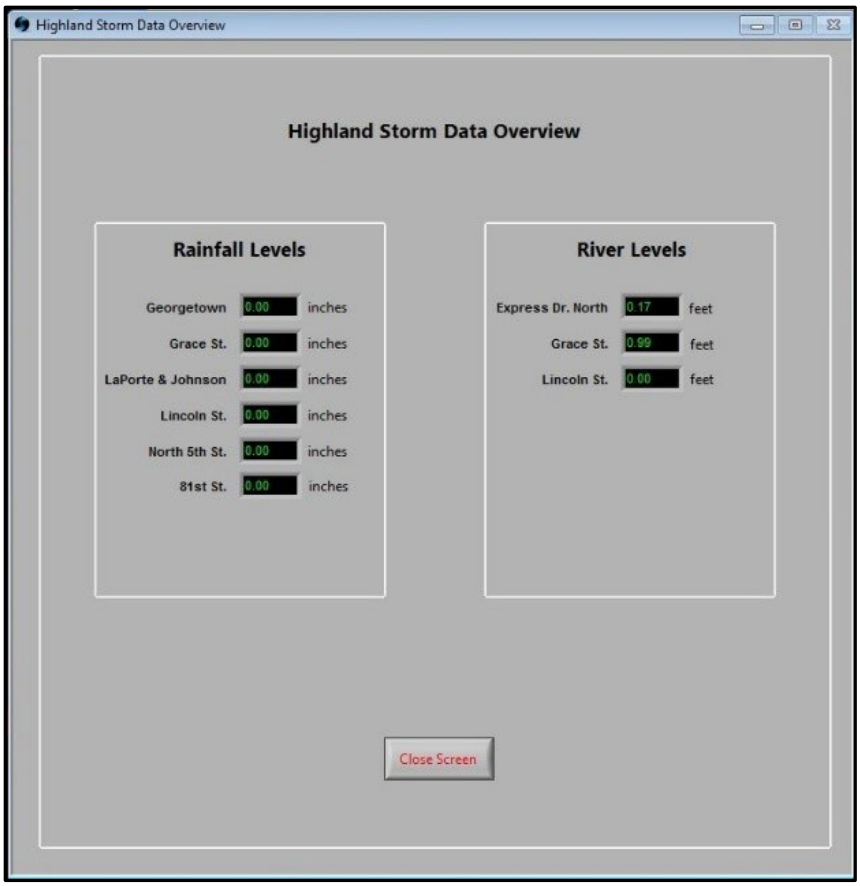

Figure 3-4 (B): Highland SCADA System

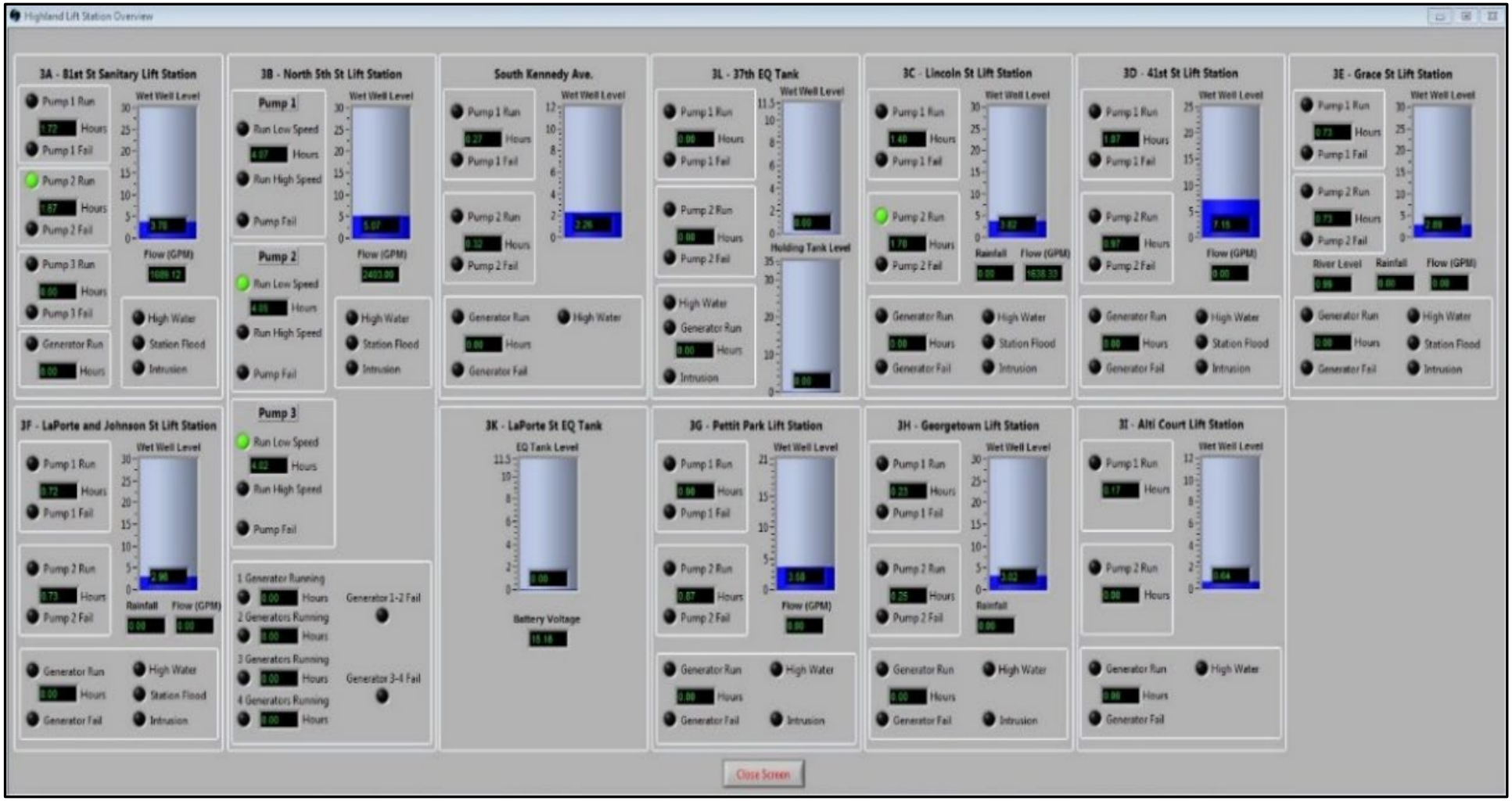

Figure 3-4 (C): Highland SCADA System

The seven (7) largest pump stations are also equipped with magnetic flow meters, which helps the staff monitor the performance and identity problems with the equipment.

If there is a notification of a pump station alarm, the on-call operator will respond to work and assess the problem. The operator will repair or call out the appropriate people to help with the problem. If there is an overflow or bypass pumping is needed, the operator will document pump hours, and the IDEM and Lake County Health Department will be notified immediately. The District engineer will submit the final report.

If there is a sewer backup, Highland's on-call personal will respond and remove an obstruction as soon as possible. Staff will document the location and any houses or businesses affected. IDEM and the Lake County Health Department will be notified immediately, and the District engineer will submit the final report.

F. Recordkeeping

Records are kept by hand for compliance, operation, and maintenance of the pump stations. The SCADA system history files are also kept and stored digitally for the parameters discussed previously. Equipment manuals are kept at each station for quick reference.

Section 4 – Collection System Maintenance

4.1 Maintenance Budgeting

Highland uses preventive maintenance techniques, which involve regular, routine maintenance that aids in consistent equipment operation, prevents any unplanned downtime, and reduces the potential for expensive costs from unanticipated equipment failure. Due to this practice, approximately seventy-five (75) percent of the maintenance costs for the District are preventative and twenty-five (25) percent are corrective or due to failures in the system. The Sewer Improvement Fund, as described in greater detail in **Section 3.1,** is annually maintained at approximately $800,000 and is used for expenses related to system upgrades, maintenance, and rehabilitation.

4.2 Planned and Unplanned Maintenance

A. Preventive Maintenance

Highland's preventive maintenance technique involves the systematic inspection of equipment where potential problems are detected and corrected in order to prevent equipment failure. The preventive maintenance schedule includes things such as cleaning, lubrication, oil changes, adjustments, repairs, inspecting and replacing parts, and partial or complete overhauls that are regularly scheduled.

The collection system personnel also maintain records of inspection and servicing, as well as being informed on the lifespan of each part to understand the replacement frequency. These records help maintenance anticipate the appropriate time to change parts and can also help diagnose problems when they occur.

Lift station inspection and maintenance activities are conducted on daily, weekly, monthly, quarterly, six-month and yearly basis. A detailed checklist for inspection and maintenance of each station can be found in **Attachment N**. The form for weekly generator inspections is shown in **Attachment O**. Storm tanks, or wet wells, are cleaned each year or at five to ten year intervals. Sanitary wet wells and equalization tanks are cleaned at varying frequencies, depending on rate of solids/debris accumulation and/or operational experience. The cleaning schedule for the storm and sanitary tanks is shown in **Attachment P**. Tank cleaning is outsourced to a local contractor and material removed from the tanks is discharged to the Hammond Sanitary District Wastewater Treatment Plant (WWTP).

Minor mechanical and electrical preventive maintenance is done by Highland personnel, major work is done by contractors.

B. Corrective Maintenance

Emergency repairs are handled as they occur per protocols outlined in the Overflow Emergency Response Plan detailed in **Section 2.6**. The complete Overflow Emergency Response Plan is included in **Attachment F**. The SCADA

system is used extensively by operation and maintenance personnel to find corrective maintenance issues before problems evolve into emergency situations.

Pump hours are monitored and logged on a daily basis to assist with identifying abnormal pump operation. The SCADA Pump Hour Check Form that is used to log the hours can be found in **Attachment N**.

The Superintendent has the unlimited authority to authorize emergency repairs to the SSCS done either in house or with contractors. Minor mechanical and electrical corrective maintenance is done by Highland personnel, major work is done by contractors.

C. Maintenance or Right-of-Way and Easements

All of Highland's facilities are located with a public right-of-way or easement. These are maintained by the Highland Sanitary District. Any construction project conducted within town limits, including street paving projects, are monitored by the responsible dept. Private laterals are the responsibility of the property owners and are defined as the pipe, cleanout, and connections from the structure to the sanitary sewer main including the tap.

4.3 Collection System Inflow and Infiltration Investigative Programs

Highland has conducted three (3) programs to reduce the inflow and infiltration (I/I) into the system. These programs are focused on assessing the condition of the collection system, monitoring flows, and delineating areas where storm drains are connected to the sanitary sewers, in order to identify and prioritize necessary sewer repairs. These programs are described below and progress reports for each from 2015 - 2023 are included with the Annual SSO Reports, which can be found in **Attachment E**.

The annual Sanitary Sewer Overflow Reports provide a summary of progress that was made on these investigative programs to detect excessive inflow and infiltration into the system and the repairs that were made. **In the future, the annual Sanitary Sewer Overflow Reports will be included in the CMOM.**

The corresponding investigation reports for each program from 2015 – 2023 are included with the Annual SSO Reports which can be found in **Attachment E**. A summary of the sanitary sewers and manholes that have been rehabilitated with CIPP lining from 2009-2023 is shown in **Table 4-1**. A map showing new sanitary sewers installed since 2011, segments that were rehabilitated with CIPP Lining thru 2018, and segments for CIPP lining in 2019 can be found in **Figure 4-1**. The pipe sizes and age of the collection system by basin is shown on **Figure 4-2**.

Moving forward, Highland has committed to cleaning and televising the entire SSCS every ten years at a rate of 10% annually per NASSCO MACP protocols. If blockages occur at a higher frequency in specific areas, Highland will increase the sewer cleaning frequency. List of higher frequency areas will be reviewed and updated annually as part of Annual CMOM review. Highland has planned the next 5-year cleaning and televising schedule for its sewer system, which will clean

approximately 48,428 linear feet of sewer per year across five areas within the SSCS. See Figure 4-3 for specific cleaning area details.

A. RedZone Robotics – Collection System Assessment

The Highland Sanitary District, Indiana Board of Sanitary Commissioners contracted with RedZone Robotics, Inc. ("Redzone") of Pittsburgh, Pennsylvania in 2014 to conduct a complete condition assessment of the sanitary sewer collection system and provide a Geographical Information System (GIS) based platform for management of the collection system assets.

The condition assessment was divided into the two primary service areas of Highland: the 5th Street Basin and the 81st Street Basin. Sanitary sewers and manholes within the 5th Street Basin were inspected between 2014 and 2016; sanitary sewers and manholes within in the 81st Street Basin were inspected beginning in 2018 and should be completed in 2019. Condition assessments for sanitary sewer laterals were not included, as these pipes are located on private property between the customer's building and the public sanitary sewer and are not the responsibility of Highland.

Redzone gives NASSCO ratings which are used to target problem areas. The Sanitary Board has approved $800K-$1M for sewer lining and replacement on an annual basis. HSD will use the worst ratings from the Redzone program to determine areas for rehabilitation which will consist of lining, pipe repairs, and segment replacements. The portion of the SSCS that was targeted for the Redzone program is 95% complete including the 5th St. and 81 St. areas. The remaining 5% was completed in 2021. Newer sections of the SSCS, south of 45th to Main St. and west of Indianapolis Blvd., were mostly built in the 1990's with PVC pipe and were not examined by the Redzone program. HSD has plans to acquire a new camera truck and complete the investigation of the south area after the cost of the new gravity sewer is finalized.

RedZone utilized state-of-the-art televising equipment to capture the condition of each asset. Manholes were inspected with 360-degree cameras that were lowered into the manholes for complete coverage of the manhole interior. Pipes twelve (12) inches in diameter and smaller were inspected using robotic televising equipment fitted with two 360-degree digital cameras, one facing forward and one facing backward for enhanced visual coverage of the pipe interior. Pipes fifteen (15) inches in diameter and larger were inspected using multi-sensor equipment that combined standard closed-circuit television (CCTV) video with sonar and laser technologies to estimate debris accumulation and pipe interior corrosion/deflection. Sections of pipe that were unable to be fully inspected due to excessive roots or debris accumulation were subsequently jetted, cleaned and CCTV televised by Highland Public Works staff. Regardless of the inspection method used, each manhole and pipe segment was rated according to National Association of Sewer Service Companies (NASSCO) industry standards for Pipeline and Manhole Assessments to characterize the asset's condition.

The televising information and Pipeline Assessment Certification Program / Manhole Assessment Certification Program (PACP/MACP) reports are incorporated into a GIS-based asset management software program called ICOM3. This program is the repository of all asset inspection records that can be viewed and managed in either an asset inventory database or GIS-based map format. The system allows for the storage and viewing of televising videos and inspection records not only for the original system-wide condition assessment, but also for future inspections that are conducted as part of Highland's ongoing maintenance and management of its collection system.

This program generated PACP ratings from the system-wide condition assessment, which were used to generate a priority list for repairs and maintenance. As repairs were completed and assets re-inspected, a new priority list was generated annually to reflect improvements to the system and re-evaluate asset conditions based on the most recent data available.

Based on televising and smoke testing inspections conducted through 2020, RedZone was contracted to perform CIPP sewer lining for 4,760 feet of sewer within the 81st Street Sub-basin. The CIPP sewer lining work was completed in 2021. As of July 31, 2022, all inspections and CIPP projects for the 5th Street and 81st Street Sub-basins were completed. A summary of the sanitary sewers and manholes that have been rehabilitated with CIPP lining from 2009-2021 is shown in **Table 4-1**.

B. Flow Monitoring

In 2007, flow monitoring of the sanitary sewer collection system, was performed by DLZ Indiana, LLC. and was conducted over a period of three months during the Spring and Summer of 2007. The program included sixteen (16) temporary flow meters, seven (7) pump station monitors on the major pump stations in Highland and one rain gauge. The sixteen (16) flow meters were located to divide the collection system into sixteen (16) sub-basins, including eleven (11) sub-basins in the 5th Street Basin and five (5) sub-basins in the 81st Street Basin. Important conclusions were that inflow, rather than infiltration, significantly impacts the Sanitary Sewer System. The report also recommended smoke testing for several of the sixteen (16) sanitary basins monitored.

Currently, Highland maintains permanent magnetic flow meters at each primary lift station. Since the 2016 SWMM Report, Highland has performed extensive flow monitoring throughout the collection system via area-velocity meters. **Section 3.5** can be reviewed if additional information is desired.

Also, Highland is utilizing isolated flow monitoring technology that allows area-velocity flow meters to be installed upstream in smaller diameter sewers with less fouling and maintenance problems. This provides valuable assistance in locating small diameter sewers with higher I&I. Further field work and analysis is then required in order to identify and correct a more specific source of I/I.

C. Smoke Testing Deficiency Correction Program

Thirteen (13) of the sixteen (16) sub-basins identified in the Flow Monitoring Study of 2007, were smoke tested during 2008 for the development of the February 2009 Smoke Testing Study. Sanitary manhole inspections (non-entry) were provided for manholes that could be accessed in the thirteen (13) sub-basins. The manhole inspections recorded information on manhole cover and pick hole size; whether or not the manhole was considered to be subject to runoff; manhole barrel condition; evidence of inflow, infiltration and surcharging; and rim to surcharge measurement.

The objective of the current program is to utilize deficiencies identified in the February 2009 Smoke Testing Study, correct the deficiencies to the extent practicable and reasonable and document/verify that corrections have taken place.

The first project involves removing manhole covers with open pick holes and replacing them with closed pick hole manhole covers. Since the last semi-annual update in July 2020, no additional defective manhole covers were found or replaced.

The second project involves correcting area drains on residential property that have been identified during smoke testing as being connected to the sanitary sewer system. The program provides construction of storm sewers and storm laterals in the Public Right-of-Way, and reimbursement to the homeowner for having the sump pump and private property lateral installed. Typically, projects have involved 50 to 150 homes at a time and have also provided street resurfacing in the areas affected. The Separation Program cost has been high, and it has been difficult to measure its success in terms on reduction in annual flow totals for the 5th Street Lift Station.

The foundation drain disconnect program has been in place since 1996 and has resulted in the disconnection of approximately 1,700 home foundation drains from the sanitary sewer system with reconnection to the storm sewer system. It was originally estimated that there might be as many as 3,000 to 3,500 homes having foundation drainage connected directly to the sanitary sewer system, indicating that the separation program is approximately 50% to 57% complete. This work has been placed on hold by the Board due to cost considerations and difficulty in assessing success in terms of reductions in annual flow totals for the 5th St. Lift Station. When funding for the project by Highland was lowered from 100% to 80% to reduce costs, many property owners could not afford the 20% required to have the work done. The funds originally used for this program are now being directed to priority projects such as sewer lining and maintenance of the lift stations and the collection system

The third project consists of disconnecting storm drainage from the sanitary sewer system for commercial/industrial properties, primarily in Downtown Highland. To

date, sixteen (16) properties have completed disconnection work, eliminating a cumulative total of approximately 72,625 square feet of tributary area.

Table 4-1
Highland Sanitary District
Sanitary Sewer and Manhole Rehabilitation
2009-2020

Year	Sanitary Sewer Rehabilitation, Summarized by Pipe Size								Sanitary MH Rehabilitation
	Total Length of CIPP Lining (Feet)								Total Number Lined
	8"	10"	12"	15"	18"	21"	24"	27"	
2009	882	1,604	-	1,825	-	-	-	-	19
2010	2,486	976	-	-	-	-	-	-	76
2013	-	-	1,601	460	-	-	-	-	-
2017	18,647	4,040	4,512	1,353	335	2,254	162	171	59
2018	7,129	3,615	3,811	831	625	-	-	-	-
2019	3,406	656	2,237	4,453	2,983	650		643	-
2020	-	1,060	-	2,277	-	-	-	-	-
2021	907	44	1,921	1,836	-	-	-	-	-

4.4 Cleaning

A. Cleaning Equipment

The Highland Sanitary District currently owns a **VACTOR 2100 Plus Combination Sewer Cleaner** truck that is used to clean the sanitary sewer lines. The jet/vac combination units use high-pressure water jetting combined with a high-flow vacuum source to clean out pipes and then vacuum up the material, which returns and restores normal sewer flow. The material removed from the SSCS is hauled off site and disposed of at Hammond WWTP.

The Highland collection system averages 3 stoppages per year which is equivalent to 0.03 per mile per year. The number of stoppages has stayed the same over the past five years.

B. Chemical Cleaning and Root Removal

A root cutter and RootX foaming tree root killer is used by collection system personnel to treat tree root intrusion into the sewer system. This product is harmless to the ecosystem and wastewater treatment plants. The formulation foams on contact with water to kill roots and inhibit growth. It fills the entire pipe to reach the top where 90% of pipeline root intrusion occurs. From start to finish,

an application takes less than thirty (30) minutes. Chemical degreaser is also used to remove accumulated grease deposits in the SSCS.

C. FOG Program

Highland's FOG Program is described in the Municipal Code Chapter 12.20 and administered by the Building Department through the permitting process. Fat, grease, oil and sand interceptors are required when, in the opinion of the Public Works Director, they are necessary for the proper handling of liquid wastes containing grease in excessive amounts, or any flammable wastes, sand and other harmful ingredients. The local limit established in the code for oil and grease and the like (hexane solubles) is 100 mg/l.

Highland is a suburban community which does not have heavy industry users that produce significant amounts of oil and grease. There are less than 100 regulated entities in the FOG program and most, if not all, of the restaurant and food processor regulated entities have a grease trap installed. The grease traps are not currently inspected regularly by Highland due to manpower limitations(A1)(A2); however, a routine inspection program that utilizes a checklist will be implemented if resources allow. The FOG Program is defined in the Highland Municipal Code Article III (Discharge Regulations) Chapter 12.20 (Sewers and Sewage Disposal) which can be found in **Attachment H.**

D. Sanitary Sewer / Manhole Cleaning

Highland has "hot spots" that are routinely cleaned approximately every eight (8) weeks. Currently, there are approximately twenty (20) locations that are related to discharges from restaurants. If 2 or more sanitary sewer overflows occur in the SSCS in a three-month period, that SSCS area is added to the list of "hot spot" locations. The last time a location was added to the list was 4 years ago and the cause of the overflows is identified as maintenance related or occurred during dry weather. A map and table, updated regularly, that provide information on the "hot spots" that require regular maintenance are included in **Attachment Q.**

As discussed previously, when the sanitary sewers are televised as part of the RedZone program, some areas are inaccessible. This alerts personnel that those lines need to be cleaned in order for that portion of the collection system to be televised and assessed. During this processed, the manholes used for access to the lines are hosed down and cleaned also as part of the process.

Sanitary and storm wet wells/tanks are cleaned on a regular schedule ranging from one (1) to ten (10) year intervals. The tank cleaning and debris measurement schedule is also shown in **Attachment P**. Debris measurement will be semi-annually.

Highland has committed to cleaning and televising the entire SSCS every ten years at a rate of 10% annually per NASSCO MACP protocols. If blockages occur at a higher frequency in specific areas, Highland will increase the sewer cleaning frequency. List of higher frequency areas will be reviewed and updated annually

as part of Annual CMOM review. Highland has planned the next 5-year cleaning and televising schedule for its sewer system, which will clean approximately 48,428 linear feet of sewer per year across five areas within the SSCS. See **Figure 4-3** for specific cleaning area details.

4.5 Sewer System Testing

A. Smoke Testing

As discussed in **Section 4.3**, the objective of the current program is to utilize deficiencies identified in the February 2009 Smoke Testing Study, correct the deficiencies to the extent practicable and reasonable and document/verify that corrections have taken place.

B. Dye Testing

Currently Highland only uses dye testing on a "as-needed" basis for investigation. There are no formal dye testing programs in place. Highland is designated as a Municipal Separate Storm Sewer System (MS4) and is obligated to implement an Illicit Discharge Detection and Elimination (IDDE) Program. Dye Testing is used in this program to ensure that illegal sources connected to the storm sewer system are removed when identified. Highland's MS4 IDDE Program will continue and sanitary sources found to be connected to the storm sewer system will be eliminated.

4.6 Sewer System Inspection

A. CCTV Inspection of Sanitary Sewers and Manholes

CCTV inspection for the District is conducted using a twelve (12) foot TV DRW High Cube Van equipped with a solid-state color sewer TV camera, self-propelled compact steerable camera transporter, and a seventeen (17) inch LCD flat screen industrial TV monitor. The SOP for this system can be found in **Attachment Y.**

In 2011 and 2012, the Highland Public Works Department purchased upgraded sewer televising equipment and had personnel trained in the Pipeline Assessment and Certification Program (PACP) developed by the National Association of Sewer Companies (NASSCO). Televising of main line sewers commenced with condition assessments made by Public Works Staff, based on PACP criteria. Collection system personnel currently use the jet truck and CCTV equipment to clean, televise, inspect, and assess targeted sanitary sewer lines.

Highland has committed to cleaning and televising the entire SSCS every ten years at a rate of 10% annually per NASSCO MACP protocols. If blockages occur at a higher frequency in specific areas, Highland will increase the sewer cleaning frequency. List of higher frequency areas will be reviewed and updated annually as part of Annual CMOM review. Highland has planned the next 5-year cleaning and televising schedule for its sewer system, which will clean approximately 48,428 linear feet of sewer per year across five areas within the SSCS. See **Figure 4-3** for specific cleaning area details.

4.7 Rehabilitation

A. Sanitary Sewer / Manhole Rehabilitation

The Highland Sanitary District is currently conducting three (3) primary programs to reduce the inflow and infiltration into the system. These programs are focused on assessing the condition of the collection system, monitoring flows, and delineating areas where storm drains are connected to the sanitary sewers, in order to identify and prioritize necessary sewer repairs.

The annual Sanitary Sewer Overflow Reports provide a summary of progress that was made on these investigative programs to detect excessive inflow and infiltration into the system and the repairs that were made. **In the future, the annual Sanitary Sewer Overflow Reports will be included in the CMOM.**

The corresponding reports for each program from 2015 - 2023 are included with the Annual SSO Reports which can be found in **Attachment E**. A summary of the sanitary sewers and manholes that have been rehabilitated with CIPP lining since 2009 is shown in **Table 4-1**. A map showing new sanitary sewers installed since 2011, segments that were rehabilitated with CIPP Lining thru 2018, and projected segments for CIPP lining in 2019 can be found in **Figure 4-1**. The pipe sizes and age of the collection system by basin is shown on **Figure 4-2.**

Highland has committed to cleaning and televising the entire SSCS every ten years at a rate of 10% annually per NASSCO MACP protocols. If blockages occur at a higher frequency in specific areas, Highland will increase the sewer cleaning frequency. List of higher frequency areas will be reviewed and updated annually as part of Annual CMOM review. Highland has planned the next 5-year cleaning and televising schedule for its sewer system, which will clean approximately 48,428 linear feet of sewer per year across five areas within the SSCS. See **Figure 4-3** for specific cleaning area details.

B. RedZone Robotics Collection System Assessment Program

This program generated PACP ratings from the system-wide condition assessment, which were used to generate a priority list for repairs and maintenance. As of July 31, 2023, all of the pipe segments in the in the 5th St. basin and the 81st Street Sub-basin. A new 5-year schedule has been implemented to perform televised inspections and cleaning in specific areas of the SSCS.

C. Flow Monitoring

The ongoing Flow Monitoring Program utilizes technology developed by Stantec Consultants which provides valuable assistance in locating small diameter sewers with higher I&I. .

D. Smoke Testing Deficiency Correction Program

The objective of this program is to utilize deficiencies identified in the February 2009 Smoke Testing Study, correct the deficiencies to the extent practicable and reasonable and document/verify that corrections have taken place.

The first project involves removing manhole covers with open pick holes and replacing them with closed pick hole manhole covers.

The second project involves correcting area drains on residential property that have been identified during smoke testing as being connected to the sanitary sewer system. The foundation drain disconnect program has been in place since 1996 and has resulted in the disconnection of approximately 1,700 home foundation drains from the sanitary sewer system with reconnection to the storm sewer system.

The third project consists of disconnecting storm drainage from the sanitary sewer system for commercial/industrial properties, primarily in Downtown Highland.

4.8 Equipment, Parts, and Tools Management

A. Parts Inventory

The Highland Sanitary District has a central location for the storage of spare parts. Critical spare parts have been identified and adequate supplies are kept on hand to facilitate timely repairs of the system. Parts standardization is utilized to efficiently maintain the equipment and Highland maintains a stock of spare parts on its maintenance vehicles for quick access. Two parts are kept in inventory for each piece of major equipment and when one is removed the replacement part is ordered immediately. For those parts which are not kept in inventory, Highland relies on the Standard Equipment Company to fulfill its needs.

B. Equipment and Tools Management

Personnel have access to the necessary equipment and tools to do all aspects of operation and maintenance of the collection system. At minimum, staff are equipped with a manhole pick and flashlight in order to assess a complaint/SSO so that the proper crew and equipment can be deployed. Staff are also provided access to suitable equipment when Highland's equipment is down for repair by using equipment from the adjacent communities of Griffith and Munster. Highland owns portable generators and equipment is stored at the Public Works Garage. Written equipment maintenance procedures are available when necessary. Equipment is replaced as needed due to age of equipment. All maintenance of in-house vehicles is done in the shop and the typical turn-around time for equipment and vehicle maintenance is about 1 day. A list of equipment, inclusive of miscellaneous details, is provided in **Table 4-2**.

Table 4-2
Highland Sanitary District List of Equipment

Unit #	Make	Model	Year	Vin Number	Department	License Plate
2	Chevy	Colorado	2004	1GCCS196548116354	Water	64711
3	Chevy	Silverado	2015	1GC0KUEG9FZ136526	Sewer	28187
5	Chevy	Silverado	2013	1GC0KVCG8DZ258378	Street	16634
6	Chevy	3500 Dump	2013	1GB3CZC87DF164153	Water	20700
7	Chevy	C4500 Dump	2009	1GBE4C1969F407764	Street	82071
8	Chevy	HHR	2008	3GCDA15D48S555862	Water	73587
9	Chevy	Silverado	2008	1GCHK24K08E162567	Sewer	77516
10	Chevy	Express	2007	1GBJG31U771111530	Water	71037
11	Sterling	Bullet Dump	2008	3F6WJ66A28G352014	Street	1076
12	Chevy	Cargo Van	2017	1GCWGBFG081139220	Water	64774
13	Chevy	Colorado	2006	1GCCS198968311989	Sewer	70434
14	Chevy	Silverado	2006	1GCHK24U46E211820	Street	71032
15	Chevy	Silverado	2015	1GCOKUEG5FZ136510	Street	28188
16	International	7400 6-Wheel Dump	2010	1HTWGAAT2AJ288798	Water	83254
17	International	7400 6-Wheel Dump	2010	1HTWGAATXAJ288757	Street	83253
18	International	7400 6-Wheel Dump	2010	1HTWGAAT2AJ288753	Sanitary	83255
19	GMC	C-8500 4-Wheel Dump	2001	1GDP7H1C81J506863	Sewer	57599
20	GMC	C-8500 4-Wheel Dump	2002	1GDP7H1C82JS12146	Sewer	60802
21	Johnston	4000 Sweeper	2003	1J9VM4HA94C172003	Sewer	23756
22	Global	M3 Sweeper	2016	1G9GM3HJ9GS462031	Sewer	78022
23	Freighliner	108SD 4-Wheel Dump	2016	1FVAG5CY9HHIB9841	Street	
24	Case	580 Super M Backhoe	2007	N7C427982	Street	NA
25	Case	580 Super M Backhoe	2007	N7C428054	Water	NA
26	Freightliner	108SD 4-Wheel Dump	2016	1FVAG5CY9HHJB9838	Water	
27	Vactor	Jet Truck	2016	3ALHG3CY3HDJE3366	Sewer	42522
28	Ford	Fusion	2007	3FAHPO7I47R254I620	B & I	74375

Unit #	Make	Model	Year	Vin Number	Department	License Plate
29	Ford	F-250	2002	1FTNF21L42EA64993	Sewer	60597
30	Ford	Fusion	2007	3FAHPO7167R251621	B & I	74376
31	Freightliner	108SD 4-Wheel Dump	2016	1FVAG5CY0HHJB9839	Street	
32	Freightliner	108SD 4-Wheel Dump	2016	1FVAG5CY7HHJB9840	Sanitary	
33	Ford	Bucket Truck	2007	1FDXF47P87EB31693	Street	17258
34	Chevy	Astro Van	2005	1GCDM19X95B132651	Sewer	33343
35	John Deere	5441 Loader	2006	DW544JZ606125	Street	NA
36	John Deere	690DLC Excavator	1988	DW690DL517757	Sewer	NA
37	Case	621E Loader	2009	N9F208012	Street	NA
38	Case	I845C Skid Steer	1993	JAF0102194	Water	NA
39	Chevy	HHR	2008	3GCDA15DX8S5422744	Water	76046
40	Chevy	3500 Dump Truck	2007	1GBJC34K57E591257	Sewer	78903
41	Bobcat	Mini-Excavator	2016	AUYJ12420	Water	NA
42	Chevy	Box/TV Truck	2007	1GBJG31U071119226	Sewer	80214
44	Chevy	Silverado	2008	1GCHK24K68E111901	Street	76651
45	Bomag	Asphalt Roller	2005	901800011258	Street	NA
49	Typhoon	Mug-A-Bug	2004	304959828	Sanitary	NA
50	GMC	Sierra	1980	TKM24AF711737	Street	23066
63	Kohler	Generator	1983	143200	Sewer	NA
68	De-Icing	Brine Applicator	2011	NA	Street	NA
69	Peabody Barnes	10” Pump	1986	68720-S-386	Sewer	NA
70	Arrowmaster	Arrow Board	2011	8107482	Water	NA
71	Arrowmaster	Arrow Board	2011	8107485	Sewer	NA
72	Falcon	Asphalt Hot Patcher	2011	1F9P41424BM339167	Street	NA
75	Smith	Arrowboard	1979	398897	Water	NA
76	Ingersol-Rand	Air Compressor	1987	160356U87953	Street	NA
78	American Roads	Leaf Vac	2005	1A9TC23315M274009	Sanitary	NA

Unit #	Make	Model	Year	Vin Number	Department	License Plate
89	American Roads	Leaf Vac	2004	1A9TC23314M274011	Sanitary	NA
80	American Roads	Leaf Vac	1992	W912524933686	Sanitary	NA
81	American Roads	Leaf Vac	1992	W912724933381	Sanitary	NA
82	American Roads	Leaf Vac	1992	W912624933632	Sanitary	NA
83	American Roads	Leaf Vac	2011	1A9TC2623BM274004	Sanitary	NA
84	Vermeer	Chipper	2008	1VR216IVIV1005243	Sanitary	NA
85	Vermeer	Chipper	2003	1VRU16148310000751	Sanitary	NA
86	Jet-Away	Sewer Cleaner	2013	38647-01	Sewer	NA
88	John Deere	Gator	2008	MOXUVDX021955	Sewer	NA
90	Chevy	Equinox	2012	2GNFLCEK8C6131483	Sewer	NA
131	Ford	Fusion	2007	3fahp07187r251622	B & I	74377
	Vermeer	Dingo	2013	1VRBO7042D1000473		
	Gold Star	Trailer	1999			
	H & H	Trailer	2003			
	Axix	Trailer	2008			
	Cronkhite	Trailer (Bobcat)	2017	473BT2828H1000009	Water	
	Chevrolet		2020	1GCOYLE74LF220226	Public Works	
	Chevrolet		2020	3GCUYAEF1LG287491	Public Works	87662
	Chevrolet		2020	1GCOYLE70LF220126	Public Works	
	Godwin	Pump	2020	16MBB0917LD080322	Public Works	N/A
	Dodge	Durango	2020	1C4RDJFG9LC309037	B & I	87172
	Dodge	Durango	2020	1C4RDJFG5LC368361	B & I	88360
	Dodge	Durango	2020	1C4RDJFG0LC369885	B & I	88359

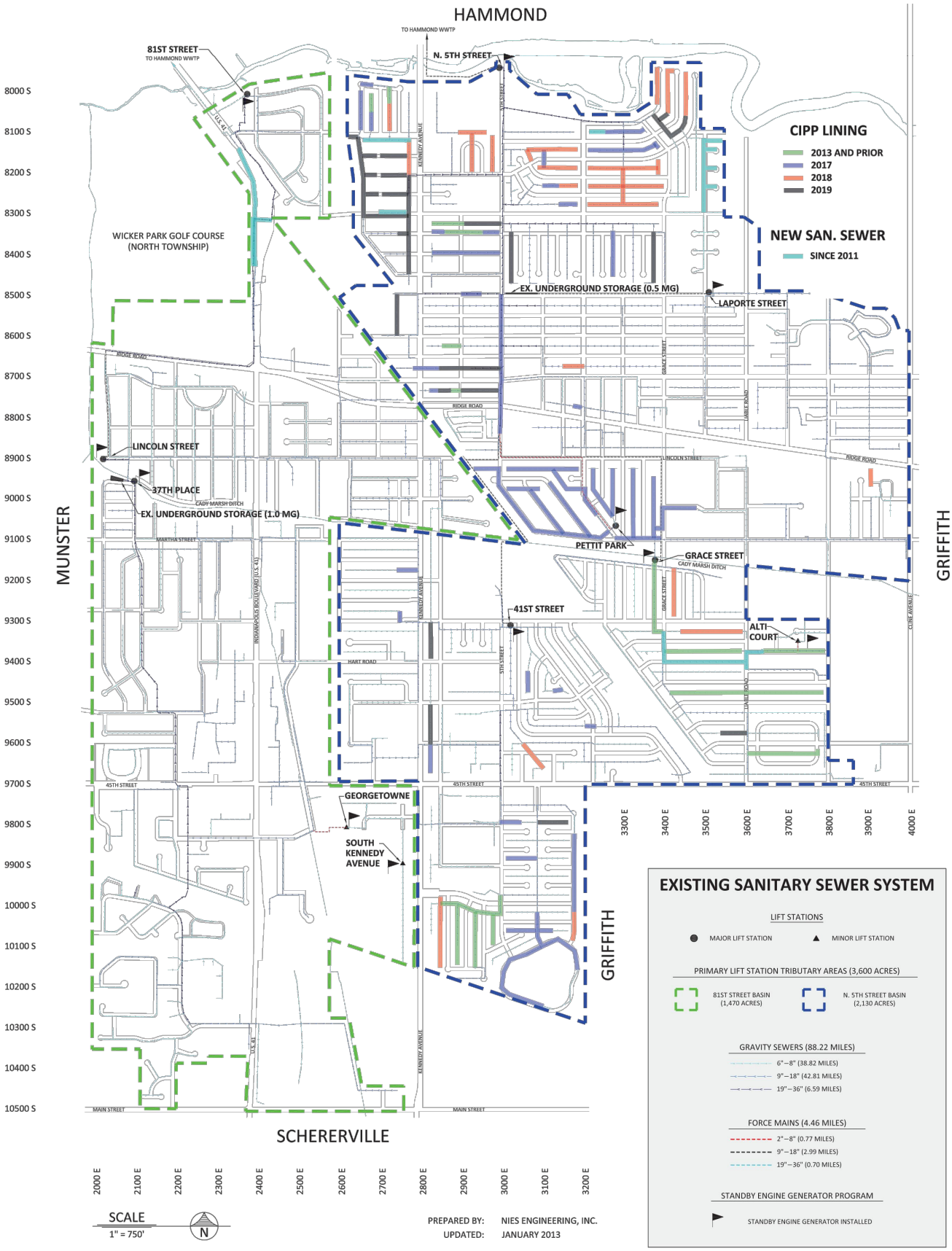

HIGHLAND INCORPORATED 1910

COMMONWEALTH ENGINEERS, INC.

TOWN OF HIGHLAND

FIGURE 4-1

SANITARY SEWER SYSTEM MAP

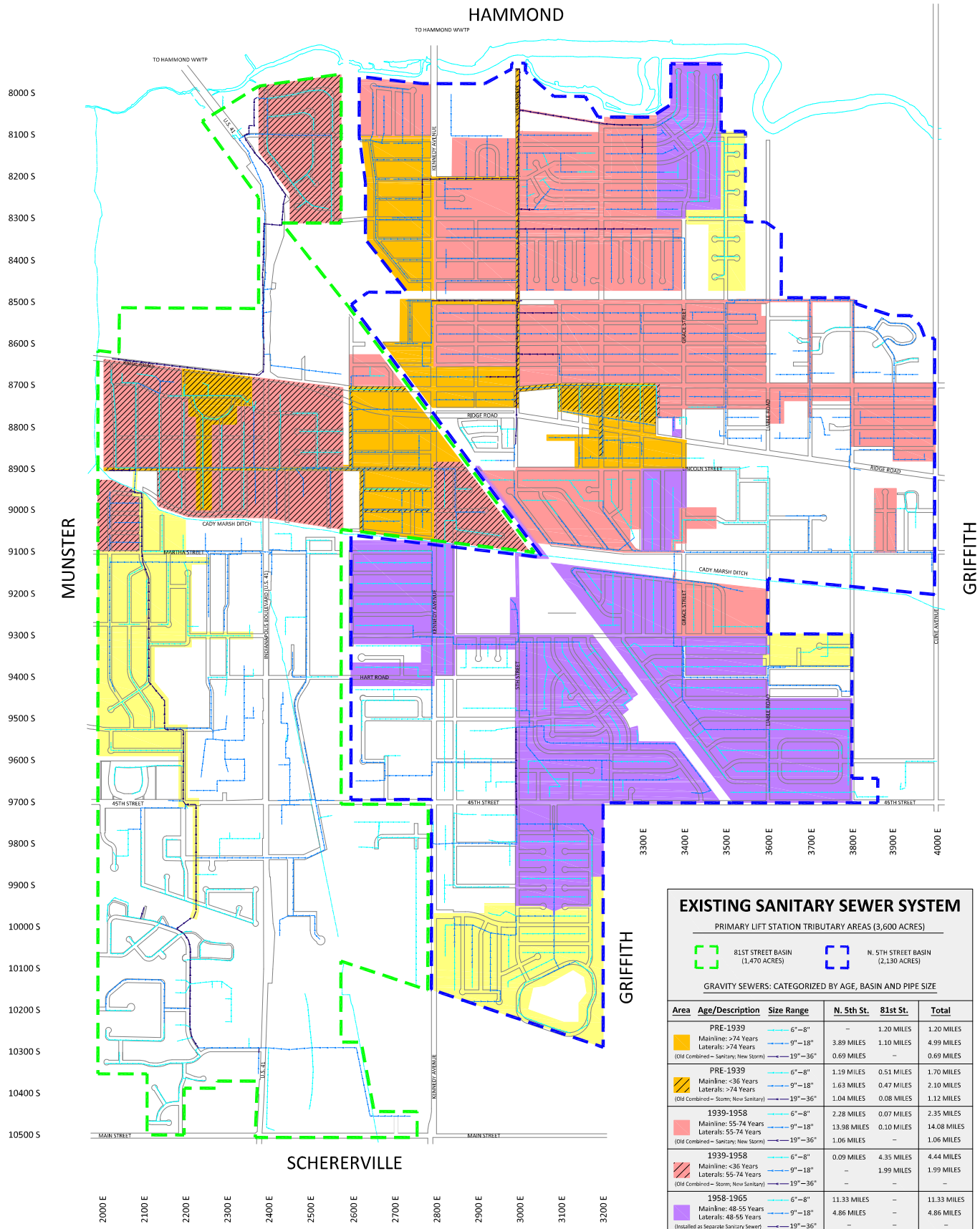

EXISTING SANITARY SEWER SYSTEM

PRIMARY LIFT STATION TRIBUTARY AREAS (3,600 ACRES)

81ST STREET BASIN (1,470 ACRES)

N. 5TH STREET BASIN (2,130 ACRES)

GRAVITY SEWERS: CATEGORIZED BY AGE, BASIN AND PIPE SIZE

Area	Age/Description	Size Range	N. 5th St.	81st St.	Total
	PRE-1939	6"–8"	–	1.20 MILES	1.20 MILES
	Mainline: >74 Years	9"–18"	3.89 MILES	1.10 MILES	4.99 MILES
	Laterals: >74 Years	19"–36"	0.69 MILES	–	0.69 MILES
	(Old Combined – Sanitary; New Storm)				
	PRE-1939	6"–8"	1.19 MILES	0.51 MILES	1.70 MILES
	Mainline: <36 Years	9"–18"	1.63 MILES	0.47 MILES	2.10 MILES
	Laterals: >74 Years	19"–36"	1.04 MILES	0.08 MILES	1.12 MILES
	(Old Combined – Storm; New Sanitary)				
	1939-1958	6"–8"	2.28 MILES	0.07 MILES	2.35 MILES
	Mainline: 55-74 Years	9"–18"	13.98 MILES	0.10 MILES	14.08 MILES
	Laterals: 55-74 Years	19"–36"	1.06 MILES	–	1.06 MILES
	(Old Combined – Sanitary; New Storm)				
	1939-1958	6"–8"	0.09 MILES	4.35 MILES	4.44 MILES
	Mainline: <36 Years	9"–18"	–	1.99 MILES	1.99 MILES
	Laterals: 55-74 Years	19"–36"	–	–	–
	(Old Combined – Storm; New Sanitary)				
	1958-1965	6"–8"	11.33 MILES	–	11.33 MILES
	Mainline: 48-55 Years	9"–18"	4.86 MILES	–	4.86 MILES
	Laterals: 48-55 Years	19"–36"	–	–	–
	(Installed as Separate Sanitary Sewer)				
	1965-1973	6"–8"	3.17 MILES	2.47 MILES	5.64 MILES
	Mainline: 40-48 Years	9"–18"	1.39 MILES	0.71 MILES	2.10 MILES
	Laterals: 40-48 Years	19"–36"	–	1.42 MILES	1.42 MILES
	(Installed as Separate Sanitary Sewer)				

PREPARED BY: NIES ENGINEERING, INC.
UPDATED: JANUARY 2013

HIGHLAND INCORPORATED 1910

SEWER SYSTEM EVALUATION STUDY

SANITARY SEWER SYSTEM AGE

FIGURE 4-2

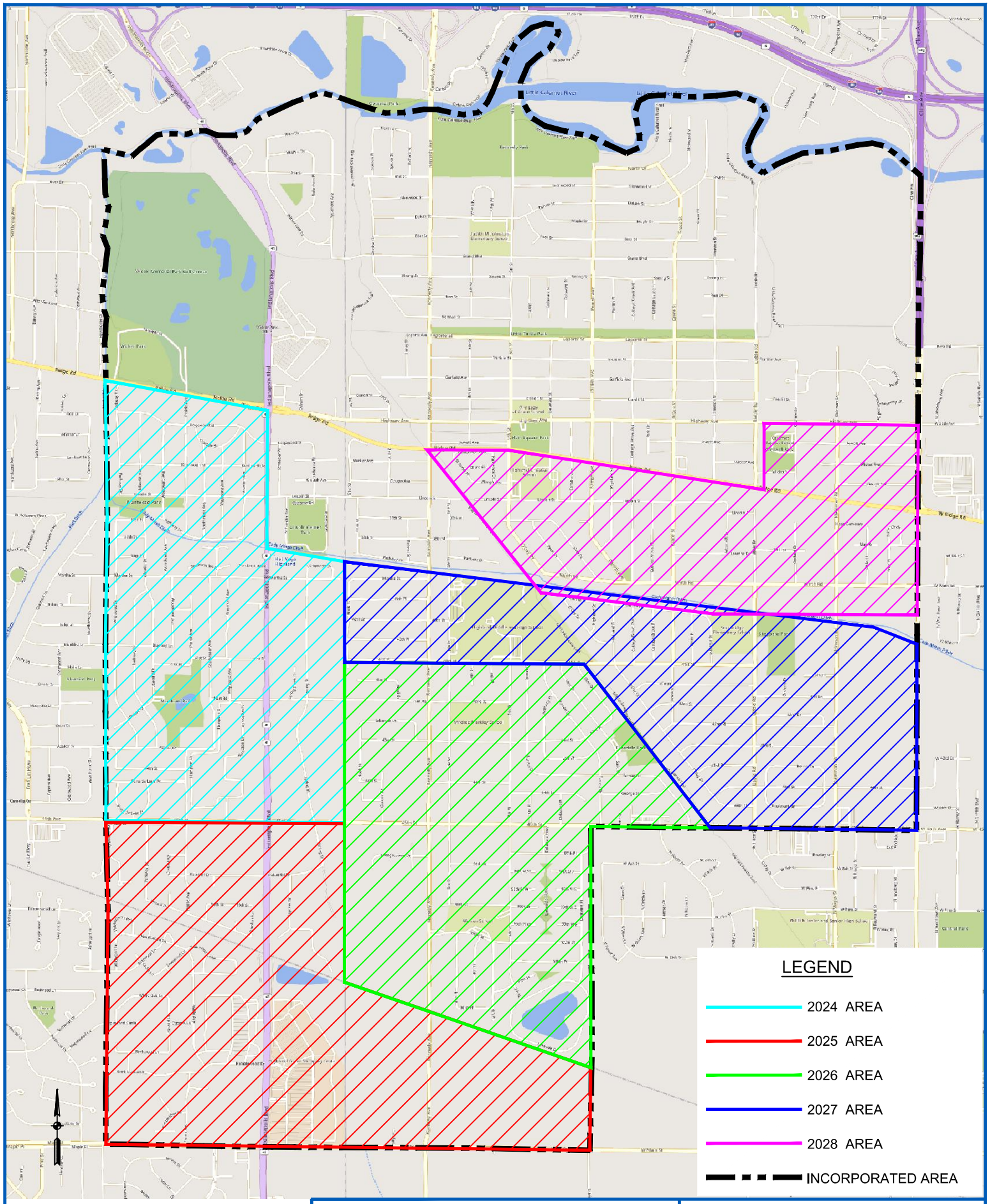

SCALE: 1"=2000'

2000' 0 2000'

COMMONWEALTH ENGINEERS, INC.

TOWN OF HIGHLAND

FIGURE 4-3

CLEANING SCHEDULE AND TELEVISING INSPECTIONS

Z:\Shared\IN Clients A-L\Highland\CMOM\ACAD\CCTV Figure.dwg PRINTED: 1/30/2024 8:05 AM BY: Craig Higbie

ATTACHMENT A

ORGANIZATIONAL CHART

March 2019; Revised June 2019; Revised March 2020; Revised February 2021; Revised January 2024

Public Works
Department of Sanitation
Organization Chart

01/24/2024

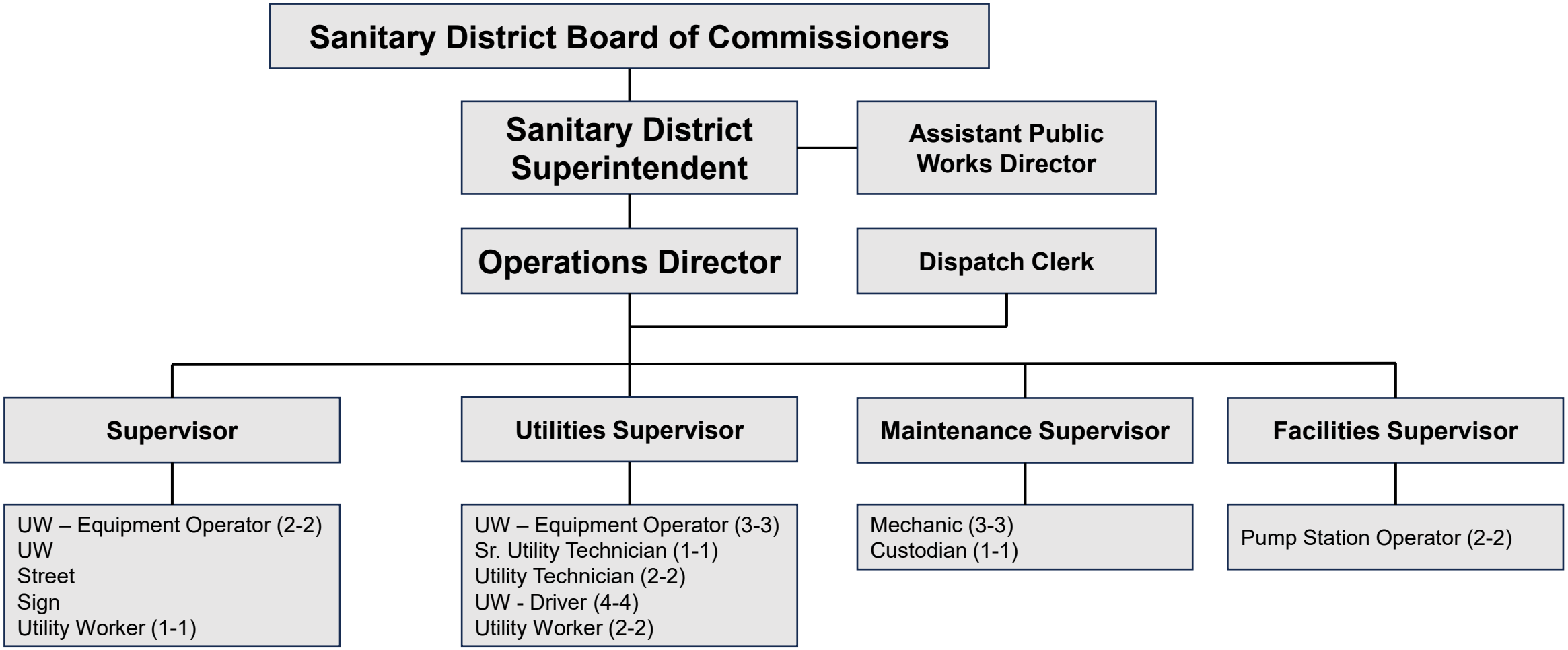

ATTACHMENT B

JOB DESCRIPTIONS

March 2019; Revised June 2019; Revised March 2020; Revised February 2021; Revised January 2024

EXEMPT POSITION DESCRIPTION

Title: Director of Public Works

Date: January 1993

Reports to: Town Council

Approved By: _____

Department: Public Works

Job Grade:

POSITION SUMMARY: Manage and direct the activities of General Supervisor, Secretary, 4 – Supervisors, 1 – Clerk Dispatcher, 31 – craft and non-craft employees performing installation, maintenance and repair on the town's potable water system, storm and sanitary sewer systems, streets and alleys, and public works buildings and related grounds; along with the collection and recycling of refuse.

POSITION FUNCTIONS:

(essential)

1. Plan and schedule regular, routine and major construction and maintenance projects to ensure minimal disruption to services provided to residents.
2. Prepare operating budgets.
3. Analyze projects, prioritize work and develop schedules to complete work in safest, most efficient manner.
4. Schedule and assign personnel to complete specified work and satisfy employee vacation allotments.
5. Recruit, select and hire full and part-time employees for the department. Lead performance evaluation process and recommend salary adjustments where appropriate.
6. Determine and requisition materials, tools and equipment required to perform the job. Supervise the flow of material and equipment to complete the job.
7. Travel to and from work sites to monitor conformance to schedule and safety requirements.
8. Arrange through outside suppliers needed services to complete planned and emergency work.
9. Arrange for the maintenance of equipment and tools utilized by the section and develops specifications for the purchase of new equipment.
10. Attend Town Council, Water Board and Sanitary Board meetings.

(marginal)

11. Prepare and maintain other written documentation including personnel records, work assignments, purchases, inventory, accident reports, etc.

This description is not intended to contain every function/responsibility that may be required to be performed by an incumbent in this job. Incumbents are required to perform other related functions as assigned or prescribed by statute.

Physical and Visual Activities:
Commonly associated with the performance of the functions of this job
Standing, Sitting, Carrving, Reaching, Fingering, Talking, Hearing, Visual Acuity-Near.

Physical Demands:
Commonly associated with the performance of the functions of this job
No significant demands associated with this job.

Environmental/Atmospheric Conditions:
Commonly associated with the performance of the functions of this job
Usual office environmental conditions.

Job Qualification Requirements

Knowledge:
Bachelor's Degree in Engineering or Business. Organization skills, supervisory skills, interpersonal skills and prior experience with Public Works activities and municipal ordinances.

Experience:
Over 3 years up to 5 years.

Machines, Tools, Equipment, Software:
Automobile, personal computer, calculator, copy machine, stationary supplies, fuel, water, lubricants.

Licenses/Certifications:
Vehicle operator's license.

This description is not intended to contain every function/responsibility that may be required to be performed by an incumbent in this job. Incumbents are required to perform other related functions as assigned or prescribed by statute.

EXEMPT POSITION DESCRIPTION

Title: Director of Operations **Date:** January 2016

Reports to: Public Works Director **Approved by:** _____

Department: Public Works

POSITION SUMMARY: Under the general supervision of the Director of Public Works, responsible for supervising and directing the activities of departmental supervisors and their sub-ordinates on the daily operation and maintenance of the various departments of Public Works.

POSITION FUNCTIONS:

Essential Duties:

- Receives work requests from various sources and assigns work to department supervisors, as necessary, and establish procedures to assure that all matters are concluded;
- Analyzes projects, sets priorities, and develops schedules to complete the work in the safest and most effective manner.
- Coordinates the workload and establishes priorities in job assignments to the department supervisors;
- Coordinate and oversee public works projects;
- Submits weekly reports to the Director of Public Works on project status and personnel matters;
- Assures that all employees adhere to the policies and procedures of the Department of Public Works as established by the Highland Municipal Employees Handbook;
- Travel to and from work sites to monitor performance to schedule and safety requirements;
- Purchase materials and supplies according to the procurement policies of the Town;
- Recruit and recommend the hire of full time and part time employees for the department. Perform performance evaluation of departmental supervisors and assure that departmental supervisors are performing performance evaluations on their departmental staff;
- Makes recommendations for the replacement or procurement of equipment. Assist in the development of specifications for the purchase of new equipment;
- Seek and receive training, as necessary, in order to keep current on the latest industry standards.

Marginal Duties:

- Respond to public inquiries, complains, and requests;
- Respond to emergencies;
- Perform other duties as assigned.

This description is not intended to contain every function/responsibility that may be required to be performed by an incumbent in this job. Incumbents are required to perform other related functions as assigned or prescribed by statute.

Working Conditions

- Physical Demands: While performing duties of the job, employee typically handles office equipment, computers, objects, or controls; employee will sit or stand for long periods of time. Constant seeing talking and hearing are required for the performance of all job tasks; required to push, pull or lift up to 50 lbs; frequent stooping, crouching and bending. Commonly associated with the performance of the functions of this job.

- Work Environment: Employee will work in a generally comfortable office setting. Great mental effort required daily; frequent exposure to stress caused by the need to meet deadlines; frequent field field work with exposure to traffic, dust, noise, extreme weather conditions, and construction site hazards. Exposure to wastewater and stormwater.

Machines, Tools, Equipment, Software:

- Automobile or light-duty truck, personal computer and computer software: MS Word, MS Excel, MS Powerpoint, and other computer programs associated with the duties of the position.

Job Qualification Requirements

- **Education:** High school diploma or equivalency. Preferred: Undergraduate degree in supervision, public or business administration, Civil Engineering, or related field of education.

- **Knowledge:** Management principles and practices including governmental budgeting and monitoring, computer skills, organizational skills, supervisory skills, interpersonal skills, communication skills (oral and written), and a working knowledge of the Town's municipal operations including water, wastewater, storm water, transportation, fleet and fleet services, as well as other major department functions. Ability to work independently without direct supervision. Ability to communicate effectively with the elected and appointed officials, employees, and the public.

EXEMPT POSITION DESCRIPTION

Title: Supervisor Utilities

Date: January 1993

Reports to: Operations Director

Approved By: _____

Department: Public Works

Job Grade:

POSITION SUMMARY: Supervise and direct the activities of 2- Equipment Operators, 5- Utilityworker/Drivers, 1- Utilityworker, and 1- Meter Mechanic performing water and sewer line installation and repair along with snow removal.

POSITION FUNCTIONS:

(Essential)

1. Receive instructions from supervisor/dispatcher/general public on nature of work to be performed.
2. Analyze projects, prioritize work and develop schedules to complete work in the safest, most efficient manner.
3. Schedule and assign personnel to complete specified work.
4. Determine and requisition materials, tools, and equipment required to perform the job. Supervise the flow of material and equipment to complete the job.
5. Travel to and from work sites to monitor conformance to schedule and safety requirements.
6. Arrange through outside suppliers needed services to complete planned and emergency work.
7. Instruct and train personnel on work methods and procedures, operations of equipment, etc.

(Marginal)

8. Arrange for the maintenance of equipment and tools utilized by the section.
9. Inform supervision of equipment needs, extraordinary repairs needed, accidents, etc.
10. Prepare and maintain written documentation including personnel records, work assignments, purchases, inventory, accident reports, etc.

Physical and Visual Activities:
Commonly associated with the performance of the functions of this job
Standing, Sitting, Carrying, Reaching, Fingering, Talking, Hearing, Visual Acuity- Near.

Physical Demands:
Commonly associated with the performance of the functions of this job
No significant demands associated with this job.

This description is not intended to contain every function/responsibility that may be required to be performed by an incumbent in this job. Incumbents are required to perform other related functions as assigned or prescribed by statute.

Environmental/Atmospheric Conditions:
Commonly associated with the performance of the functions of this job
20% exposure to both inside and outside weather conditions. 80% usual office environmental conditions.

Job Qualification Requirements

Knowledge:
Organization skills, supervisory skills and, interpersonal skills, and prior experience with Public Works activities and municipal ordinances. Able to understand and present reports and instructions and read blueprints. Requires background in excavation, sewer and water line installation and repair, OSHA and AWWA standards, municipal administrative procedures and Town ordinances.

Experience:
Over 3 years up to 5.

Machines, Tools, Equipment, Software:
Automobile, personal computer, calculator, copy machine, stationary supplies, fuel, water, and lubricants.

Licenses/Certifications:
Vehicle operator's license.

This description is not intended to contain every function/responsibility that may be required to be performed by an incumbent in this job. Incumbents are required to perform other related functions as assigned or prescribed by statute.

EXEMPT POSITION DESCRIPTION

Title: Supervisor Streets & Sanitation

Date: January 1993

Reports to: Operations Director

Approved By: _____

Department: Public Works

Job Grade:

POSITION SUMMARY: Supervise and direct the activities of 1- Sign Coordinator, 1- Equipment Operator, 4- Utilityman/Drivers, 4- Utilityman, and 2- Street Sweep Operators performing street, sidewalk, and lawn repairs along with snow and debris removal.

POSITION FUNCTIONS:

(Essential)

1. Receive instructions from supervisor/ dispatcher/general public on nature of work to be performed.
2. Analyze projects, prioritize work and develop schedules to complete work in the safest, most efficient manner.
3. Schedule and assign personnel to complete specified work.
4. Determine and requisition materials, tools, and equipment required to perform the job. Supervise the flow of material and equipment to complete the job.
5. Travel to and from work sites to monitor conformance to schedule and safety requirements.
6. Arrange through outside suppliers needed services to complete planned and emergency work.
7. Instruct and train personnel on work methods and procedures, operations of equipment, etc.

(Marginal)

8. Arrange for the maintenance of equipment and tools utilized by the section.
9. Inform supervision of equipment needs, extraordinary repairs needed, accidents, etc.
10. Prepare and maintain written documentation including personnel records, work assignments, purchases, inventory, accident reports, etc.
11. Supervise, when necessary, activity outside streets and sanitation division.

Physical and Visual Activities:
Commonly associated with the performance of the functions of this job
Standing, Sitting, Carrying, Reaching, Fingering, Talking, Hearing, Visual Acuity- Near.

This description is not intended to contain every function/responsibility that may be required to be performed by an incumbent in this job. Incumbents are required to perform other related functions as assigned or prescribed by statute.

Physical Demands:
Commonly associated with the performance of the functions of this job
No significant demands associated with this job.

Environmental/Atmospheric Conditions:
Commonly associated with the performance of the functions of this job
20% exposure to both inside and outside weather conditions. 80% usual office environmental conditions.

Job Qualification Requirements

Knowledge:
Organization skills, supervisory skills and, interpersonal skills, and prior experience with Public Works activities and municipal ordinances. Able to understand and present reports and instructions and read blueprints. Requires background in excavation, street repair, OSHA standards, municipal administrative procedures and Town ordinances.

Experience:
Over 3 years up to 5.

Machines, Tools, Equipment, Software:
Automobile, personal computer, calculator, copy machine, stationary supplies, fuel, water, and lubricants.

Licenses/Certifications:
Vehicle operator's license.

This description is not intended to contain every function/responsibility that may be required to be performed by an incumbent in this job. Incumbents are required to perform other related functions as assigned or prescribed by statute.

EXEMPT POSITION DESCRIPTION

Title: Supervisor Facility

Date: January 1993

Reports to: Operations Director

Approved By: _____

Department: Public Works

Job Grade:

POSITION SUMMARY: Supervise and direct the activities of 2- Custodians, 1- Custodian/Handyman, 1- Disposal Unit Attendant, and 1- Sr. Pump Station Mechanic performing the maintenance of all Public Works buildings and grounds (Town Hall- building only), operation of pump stations and disposal/recycling unit.

POSITION FUNCTIONS:

(Essential)

1. Receive instructions from supervisor/dispatcher/general public on nature of work to be performed.
2. Analyze projects, prioritize work and develop schedules to complete work in safest, most efficient manner.
3. Schedule and assign personnel to complete specified work.
4. Determine and requisition materials, tools, and equipment required to perform the job. Supervise the flow of material and equipment to complete the job.
5. Travel to and from work sites to monitor conformance to schedule and safety requirements.
6. Arrange through outside suppliers needed services to complete planned and emergency work.
7. Instruct and train personnel on work methods and procedures, operations of equipment, etc.

(Marginal)

8. Arrange for the maintenance of equipment and tools utilized by the section.
9. Inform supervision of equipment needs, extraordinary repairs needed, accidents, etc.
10. Prepare and maintain written documentation including personnel records, work assignments, purchases, inventory, accident reports, etc.

Physical and Visual Activities:

Commonly associated with the performance of the functions of this job

Standing, Sitting, Carrying, Reaching, Fingering, Talking, Hearing, Visual Acuity- Near.

This description is not intended to contain every function/responsibility that may be required to be performed ban incumbent in this job. Incumbents are required to perform other related functions as assigned or prescribed by statute.

Physical Demands:
Commonly associated with the performance of the functions of this job
No significant demands associated with this job.

Environmental/Atmospheric Conditions:
Commonly associated with the performance of the functions of this job
20% exposure to both inside and outside weather conditions. 80% usual office environmental conditions.

Job Qualification Requirements

Knowledge:
Organization skills, supervisory skills and, interpersonal skills, and prior experience with Public Works activities and municipal ordinances. Able to understand and present reports and instructions and read blueprints. Requires background in excavation, street repair, OSHA standards, municipal administrative procedures and Town ordinances.

Experience:
Over 3 years up to 5.

Machines, Tools, Equipment, Software:
Automobile, personal computer, calculator, copy machine, stationary supplies, fuel, water, and lubricants.

Licenses/Certifications:
Vehicle operator's license.

This description is not intended to contain every function/responsibility that may be required to be performed ban incumbent in this job. Incumbents are required to perform other related functions as assigned or prescribed by statute.

EXEMPT POSITION DESCRIPTION

Title: Supervisor Maintenance

Date: January 1993

Reports to: Operations Director

Approved By: _____

Department: Public Works

Job Grade:

POSITION SUMMARY: Supervise and direct the activities of 1-Mechanic/Welder and 3- Mechanics performing emergency repairs, equipment alteration, and preventative maintenance and inspection on the Town's fleet of vehicles, motorized equipment, trailers, plows and salt spreaders along with snow removal.

POSITION FUNCTIONS:

(Essential)

1. Receive instructions from supervisor/police department/ dispatcher/general public on nature of work to be performed.
2. Inspect equipment/vehicle to determine necessary repairs, prioritize work and develop schedules to complete work in the safest most efficient manner.
3. Schedule and assign personnel to complete specified work.
4. Determine and requisition materials, tools, and equipment required to perform the job. Supervise the flow of material and equipment to complete the job.
5. Monitor conformance to schedule and safety requirements.
6. Arrange through outside suppliers needed services to complete planned and emergency work.
7. Instruct and train personnel on work methods and procedures, operations of equipment, etc.

(Marginal)

8. Arrange for the maintenance of equipment and tools utilized by the section.
9. Inform supervision of equipment needs, extraordinary repairs needed, accidents, etc.
10. Prepare and maintain written documentation including personnel records, work assignments, purchases, inventory, accident reports, etc.
11. Supervise snow removal operations, water main repairs, sewer problems, etc., when necessary and scheduled.

This description is not intended to contain every function/responsibility that may be required to be performed by an incumbent in this job. Incumbents are required to perform other related functions as assigned or prescribed by statute.

Physical and Visual Activities:
Commonly associated with the performance of the functions of this job
Standing, Sitting, Carrying, Reaching, Fingering, Talking, Hearing, Visual Acuity- Near.

Physical Demands:
Commonly associated with the performance of the functions of this job
No significant demands associated with this job.

Environmental/Atmospheric Conditions:
Commonly associated with the performance of the functions of this job
20% exposure to both inside and outside weather conditions. 80% usual office environmental conditions.

Job Qualification Requirements

Knowledge:
Organization skills, supervisory skills and, interpersonal skills. Able to understand and present reports and instructions and read blueprints. Requires background in equipment structural and internal combustion engine repair, operation of garage tools and equipment, safe equipment operating procedures, municipal administrative procedures and Town ordinances.

Experience:
Over 3 years up to 5.

Machines, Tools, Equipment, Software:
Automobile, personal computer, calculator, copy machine, stationary supplies, fuel, water, and lubricants.

Licenses/Certifications:
Vehicle operator's license.

This description is not intended to contain every function/responsibility that may be required to be performed by an incumbent in this job. Incumbents are required to perform other related functions as assigned or prescribed by statute.

EXEMPT POSITION DESCRIPTION

Title: Secretary

Date: January 1993

Reports to: Director of Public Works

Approved By: _____

Department: Public Works

Job Grade:

POSITION SUMMARY: Provide administrative assistance to the Public Works Department.

POSITION FUNCTIONS:

(Essential)

1. Answer telephone calls and receive visitors. Respond to questions and complaints, forward calls or action needed to appropriate party or take messages.

2. Maintain and organize general departmental and personnel files.

3. Record hours worked on personnel records, determine appropriate account to be charges and forward required information to Personnel Clerk for processing of payroll. Develop payroll report and balance with payroll ledger.

4. Perform miscellaneous typing on personal computer. May compose letters as needed.

5. Record purchase orders in ledger, receives invoices, identify proper account to be charged, type and mail claims for processing. Perform book transfers, monitor account balances, reconcile accounts and maintain files for all accounting records.

6. Compute diesel fuel, gasoline and oil consumption. Develop report and process claim or file with Indiana Department of Revenue as needed.

7. Compute and record water consumption and file bacteriological reports with the Indiana Department of Environmental Management.

(Marginal)

8. Serve as recording secretary. Attend meetings, record, type, and distribute minutes.

9. Receive, sort and distribute mail. Act as Notary.

10. Develop various reports and provide budget information as requested by department head.

Physical and Visual Activities:
Commonly associated with the performance of the functions of this job
Standing, Sitting, Stooping, Climbing, Carrying, Reaching, Fingering, Talking, Hearing, Visual Acuity-Near.

This description is not intended to contain every function/responsibility that may be required to be performed by an incumbent in this job. Incumbents are required to perform other related functions as assigned or prescribed by statute.

Physical Demands:
Commonly associated with the performance of the functions of this job
No significant demands associated with this job.

Environmental/Atmospheric Conditions:
Commonly associated with the performance of the functions of this job
Usual office environmental conditions.

Job Qualification Requirements

Knowledge:
Municipal accounting procedures, organization skills, typing, shorthand, word processing, basic math, and interpersonal skills.

Experience:
Over 1 year up to 3 years.

Machines, Tools, Equipment, Software:
Typewriter, phone, copier, calculator, personal computer, dispatch radio, tape recorder, and fax machine.

Licenses/Certifications:
None

This description is not intended to contain every function/responsibility that may be required to be performed by an incumbent in this job. Incumbents are required to perform other related functions as assigned or prescribed by statute.

NONEXEMPT POSITION DESCRIPTION

Title: Senior Utility Technician **Date:** October 2003

Reports to: Supervisor – Water & Sewer **Approved by:** _____

Department: Public Works

POSITION SUMMARY: Has thorough knowledge of the water and wastewater systems. Operates truck and other equipment to support the delivery of water, collection of wastewater (storm and sanitary), and other miscellaneous duties required by the department. Maintain facilities and plant of the Waterworks District, Sanitary District, and Public Works Department. Provides service to customers of the Waterworks District and Sanitary District.

POSITION FUNCTIONS:

(essential)

General Duties

- Receive instructions from supervisor concerning the nature of work to be performed.
- Maintain log of all maintenance and repair work.
- Inform supervision of any equipment irregularities, repairs needed, accidents, etc. Complete routine turn reports as required.
- Maintain trucks, work area, and equipment in a clean, safe, and orderly condition.

Construction and General Maintenance

- Repair and maintain water mains and appurtenances, storm and sanitary sewers and appurtenances, and plant.
- Install new water main, water service lines, fire hydrants, valves, or other appurtenances.
- Install new storm and sanitary sewer lines, manholes, service connections, or other appurtenances.
- Clean, jet, vacuum, televise sewer lines, manholes, catch basins and inlets.
- Operates and maintains the Closed Circuit Television Inspection Unit.
- Receive instructions from the Utility Clerical Staff of the Office of the Clerk-Treasurer concerning the servicing of customers of the water and sewer utility. Functions to include but, not limited to: turning on/off customer's water; locating water and sewer lines; making bank deposits; reading meters; mail deliveries; etc.
- Remove and replace water meters, install new or replacement water meters, or perform miscellaneous repairs of water meters and associated systems.

- Respond for emergency repairs or maintenance or other required work after normal working hours, when necessary.

- Operate truck/tractor to perform snow removal

This description is not intended to contain every function/responsibility that may be required to be performed by an incumbent in this job. Incumbents are required to perform other related functions as assigned or prescribed by statute.

Physical and Visual Activities:

Commonly associated with the performance of the functions of this job.

Standing, Walking, Sitting, Lifting, Pushing, Pulling, Stooping, Kneeling, Crouching, Carrying, Reaching, Fingering, Visual-acuity near, Hearing, and Talking.

Physical Demands:

Commonly associated with the performance of the functions of this job.

Lifting, moving and carrying of weights over 5 lbs up to 25 lbs is required 15% to 40% of the time to install meters, make mail runs, carry equipment, operate water main valves. Able to use small tools and delicate equipment, operate computers and equipment controls; safely access pump stations, equipment and water storage facilities and water towers. Able to handle heavy pumps and hoses, move cylinders, open and close fire hydrants, operate controls, drive, ride, handle light tools, make minor repairs, service equipment, access pump stations and water towers, lubricate equipment, climb on equipment

Environmental/Atmospheric Conditions:

Commonly associated with the functions of this job.

Exposed to inside and outside weather conditions.

Job Qualification Requirements

Knowledge:

Able to understand equipment and maintenance instructions; blueprints; water main installation and repair procedures; safe equipment operating procedures; safety rules; and water instrumentation repair and installation.

Experience:

Ability to work independently without direct supervision, ability to communicate effectively with the public, understanding of the operations of the water and sewer utilities.

Machines, Tools, Equipment, Software:

Utility van, trucks, CCTV Sewer Inspection Unit, construction equipment, various hand tools (pipe wrenches, screw drivers, hand wrenches, drills, hammers, etc), shovel, rake, pick, sledge hammer, metal detectors, and line locating equipment.

Licenses/Certifications:

Distribution System – Large Waterworks Operator
Commercial Driver's license
CCTV Sewer Inspection Unit Training
Trenching and Excavation Competent Person Training
OSHA Training – 10 Hour Course

EXEMPT POSITION DESCRIPTION

Title: Equipment Operator

Date: January 1993

Reports to: Supervisor- Streets & Sanitation

Approved By: _____

Department: Public Works

Job Grade:

POSITION SUMMARY: Operates back hoe, front-end loader, trucks and other light and heavy equipment to perform general excavation work, material transport, street cleaning, and snow removal.

POSITION FUNCTIONS:

(Essential)

1. Receive instructions from supervisor concerning nature of work to be performed.
2. Use steering wheel, hand levers, and/or foot pedals to maneuver truck/tractor, control movement of attachments, etc. to drive implement to and from work sites.
3. Operate street tractor to perform general excavations (Trenching, grading, etc.) loading, unloading and transferring materials at work site.
4. Operate truck/tractor to perform snow removal and general clean-up work and changes attachments as required to perform various work assignments.

(Marginal)

5. Inspect equipment for proper operation and make minor repairs and adjustments to vehicle.
6. Complete routine turn reports as required.
7. Inform supervision of any equipment irregularities, repairs needed, accidents, etc.
8. Maintain tractor and work area in a clean and orderly condition.
9. Perform utility man work (see utility worker job description.)
10. Operates a street sweeper to perform street cleaning on a designated route and dump debris.

Physical and Visual Activities:
Commonly associated with the performance of the functions of this job
Standing, Sitting, Carrying, Reaching, Hearing, Visual Acuity-Far, Depth perception, and field vision.

Significant portion of job requires confinement in tractor cab to control the movement of equipment. Must be able to access equipment and perform required inspection and maintenance, assist in field

This description is not intended to contain every function/responsibtlity that may be required to be performed by an incumbent in this job. Incumbents are required to perform other related functions as assigned or prescribed by statute.

repairs, change attachments, etc. Able to manipulate hand and foot controls to maneuver equipment in close quarters.

Able to judge distances and clearances, monitor equipment operation and recognize hazards. Able to work in low light conditions.

Physical Demands:
Commonly associated with the performance of the functions of this job
No significant demands associated with this job.

Environmental/Atmospheric Conditions:
Commonly associated with the performance of the functions of this job
Exposed to inside and outside weather conditions, cold and hot temperature changes, humidity, noise, vibration, hazards, and fumes.

Job Qualification Requirements

Knowledge:
Able to understand detailed instructions; excavation, street repair and safe equipment operating procedures.

Experience:
Over 1 year up to 3 years

Machines, Tools, Equipment, Software:
Rubber tired tractors with bucket; Yz and %ton pickup trucks; 4, 6, and 10 wheel dump trucks; and various hand implements including shovel, pick, rake, sledge hammer, and misc. small tools.

Licenses/Certifications:
Class B operator's license.

This description is not intended to contain every function/responsibility that may be required to be performed by an incumbent in this job. Incumbents are required to perform other related functions as assigned or prescribed by statute.

NONEXEMPT POSITION DESCRIPTION

Title: Pump Station Operator **Date:** October 2003

Reports to: Supervisor – Facilities **Approved by:** _____

Department: Public Works

POSITION SUMMARY: Operates truck and other light equipment to support the delivery of water, collection of wastewater (storm and sanitary), and other miscellaneous duties required by the department. Maintain facilities and plant of the Waterworks District, Sanitary District, and Public Works Department. Provides service to customers of the Waterworks District and Sanitary District.

POSITION FUNCTIONS:

(essential)

General Duties

- Receive instructions from supervisor concerning the nature of work to be performed.
- Maintain log of all maintenance and repair work.
- Inform supervision of any equipment irregularities, repairs needed, accidents, etc. Complete routine turn reports as required.
- Maintain trucks, work area, and equipment in a clean, safe, and orderly condition.
- Operate truck/tractor to and from work site, transport equipment materials and supplies, and perform snow removal operations.

Facilities and Pump Stations

- Start, stop, adjust, inspect, and maintain pumps and related equipment. Make minor repairs and adjustments to pumping equipment such as tighten nuts and bolts, adjust valves, lubricate, etc.
- Take water and sewage samples, check chlorine residual in water, operate chlorinator, collect flow data from pump stations, as necessary.
- Perform daily routine general maintenance, including lawn and landscaping, on all pump stations and facilities.
- Respond to pump alarms or perform other required work after normal working hours, when necessary, pursuant to the call-out schedule.

(marginal)

- Inform supervision of any equipment irregularities, repairs needed, accidents, materials required, etc.
- Maintain work area, equipment, and vehicles in a clean and orderly condition.

This description is not intended to contain every function/responsibility that may be required to be performed by an incumbent in this job. Incumbents are required to perform other related functions as assigned or prescribed by statute.

Physical and Visual Activities:

Commonly associated with the performance of the functions of this job.

Standing, Walking, Sitting, Lifting, Pushing, Pulling, Stooping, Kneeling, Crouching, Carrying, Reaching, Fingering, Visual-acuity near, Hearing, and Talking.

Physical Demands:

Commonly associated with the performance of the functions of this job.

Lifting, moving and carrying of weights over 5 lbs up to 25 lbs is required 15% to 40% of the time to install meters, make mail runs, carry equipment, operate water main valves. Able to use small tools and delicate equipment, operate computers and equipment controls; safely access pump stations, equipment and water storage facilities and water towers. Able to handle heavy pumps and hoses, move cylinders, open and close fire hydrants, operate controls, drive, ride, handle light tools, make minor repairs, service equipment, access pump stations and water towers, lubricate equipment, climb on equipment

Environmental/Atmospheric Conditions:

Commonly associated with the functions of this job.

Exposed to inside and outside weather conditions.

Job Qualification Requirements

Knowledge:

Able to understand equipment and maintenance instructions; blueprints; water main installation and repair procedures; safe equipment operating procedures; safety rules; and water instrumentation repair and installation.

Experience:

Demonstrated ability to work independently without direct supervision, Demonstrated ability to communicate effectively with the public, Demonstrated understanding of the operations of the water and sewer utilities. 1 to 3 years of mechanical and/or electrical experience.

Machines, Tools, Equipment, Software:

Utility van, trucks, various hand tools (pipe wrenches, screw drivers, hand wrenches, drills, hammers, etc), shovel, rake, pick, sledge hammer, metal detectors, and line locating equipment.

Licenses/Certifications:

Pursuant to State Laws, the Town of Highland is required to have certified personnel operating the Distribution System and Chemical Treatment systems. In order to meet these requirements, the Town reserves the right to require certification of Utility Technicians to meet the state guidelines.

Distribution System – Large Waterworks Operator (within one-year)
Chemical Treatment license (may be required)
Backflow Prevention Certification (may be required)
Vehicle Driver's License
Commercial Driver's license (may be required)

NONEXEMPT POSITION DESCRIPTION

Title: Utility Technician **Date:** October 2003

Reports to: Supervisor – Water & Sewer **Approved by:** _____

Department: Public Works

POSITION SUMMARY: Operates truck and other equipment to support the delivery of water, collection of wastewater (storm and sanitary), and other miscellaneous duties required by the department. Maintain facilities and plant of the Waterworks District, Sanitary District, and Public Works Department. Provides service to customers of the Waterworks District and Sanitary District.

POSITION FUNCTIONS:
(essential)

General Duties

- Receive instructions from supervisor concerning the nature of work to be performed.
- Maintain log of all maintenance and repair work.
- Inform supervision of any equipment irregularities, repairs needed, accidents, etc. Complete routine turn reports as required.
- Maintain trucks, work area, and equipment in a clean, safe, and orderly condition.

Construction and General Maintenance

- Repair and maintain water mains and appurtenances, storm and sanitary sewers and appurtenances, and plant.
- Install new water main, water service lines, fire hydrants, valves, or other appurtenances.
- Install new storm and sanitary sewer lines, manholes, service connections, or other appurtenances.
- Clean, jet, vacuum, televise sewer lines, manholes, catch basins and inlets.
- Receive instructions from the Utility Clerical Staff of the Office of the Clerk-Treasurer concerning the servicing of customers of the water and sewer utility. Functions to include but, not limited to: turning on/off customer's water; locating water and sewer lines; making bank deposits; reading meters; mail deliveries; etc.
- Remove and replace water meters, install new or replacement water meters, or perform miscellaneous repairs of water meters and associated systems.
- Respond for emergency repairs or maintenance or other required work after normal working hours, when necessary.

- Operate truck/tractor to perform snow removal

This description is not intended to contain every function/responsibility that may be required to be performed by an incumbent in this job. Incumbents are required to perform other related functions as assigned or prescribed by statute.

Physical and Visual Activities:

Commonly associated with the performance of the functions of this job.

Standing, Walking, Sitting, Lifting, Pushing, Pulling, Stooping, Kneeling, Crouching, Carrying, Reaching, Fingering, Visual-acuity near, Hearing, and Talking.

Physical Demands:

Commonly associated with the performance of the functions of this job.

Lifting, moving and carrying of weights over 5 lbs up to 25 lbs is required 15% to 40% of the time to install meters, make mail runs, carry equipment, operate water main valves. Able to use small tools and delicate equipment, operate computers and equipment controls; safely access pump stations, equipment and water storage facilities and water towers. Able to handle heavy pumps and hoses, move cylinders, open and close fire hydrants, operate controls, drive, ride, handle light tools, make minor repairs, service equipment, access pump stations and water towers, lubricate equipment, climb on equipment

Environmental/Atmospheric Conditions:

Commonly associated with the functions of this job.

Exposed to inside and outside weather conditions.

Job Qualification Requirements

Knowledge:

Able to understand equipment and maintenance instructions; blueprints; water main installation and repair procedures; safe equipment operating procedures; safety rules; and water instrumentation repair and installation.

Experience:

Ability to work independently without direct supervision, ability to communicate effectively with the public, understanding of the operations of the water and sewer utilities.

Machines, Tools, Equipment, Software:

Utility van, trucks, construction equipment, various hand tools (pipe wrenches, screw drivers, hand wrenches, drills, hammers, etc), shovel, rake, pick, sledge hammer, metal detectors, and line locating equipment.

Licenses/Certifications:

Pursuant to State Laws, the Town of Highland is required to have certified personnel operating the Distribution System. In order to meet these requirements, the Town reserves the right to require certification of Utility Technicians to meet the state guidelines.

Distribution System – Large Waterworks Operator (within one-year)
Commercial Driver's license

NONEXEMPT POSITION DESCRIPTION

Title:	**Utility Worker/Driver**	**Date: January 1993**
Reports to:	**Supervisor**	**Approved By: _____**
Department:	**Public Works**	**Job Grade:**

POSITION SUMMARY: Operates front-end loader, jet truck/sewer rodder, black top roller, trucks and other light and heavy equipment to perform street and sidewalk repair and construction, water and sewer line repair and installations, material transport, snow and debris removal.

POSITION FUNCTIONS:

(essential)

1. Receive instructions from supervisor concerning nature of work to be performed.

2. Use steering wheel, hand levers, and/or foot pedals to maneuver truck/tractor, control movement of attachments, etc. to drive implement to and from work sites.

3. Operate vehicles to perform general excavations (trenching, grading, etc.), loading, unloading and transferring materials need to perform street and sidewalk repair and construction, water and sewer line repair, remove debris, clean basins, etc.

4. Operate truck/tractor to perform snow removal and general clean-up work and changes attachments as required to perform various work assignments.

5. Direct and support performance of utililtyman work (see Utilityman job description).

(marginal)

6. Inspect equipment for proper operation and makes minor repairs and adjustment to vehicle.

7. Complete routine turn reports as required.

8. Inform supervision of any equipment irregularities, repairs needed, accidents, etc.

9. Maintain truck, tractor and work area in a clean and orderly condition.

This description is not intended to contain function/responsibility that may be required to be performed by an incumbent in this job. Incumbents are required to perform other related functions as assigned or prescribed by statute.

NONEXEMPT POSITION ESCRIPTION

Title: Utility Worker (A & B) **Date:** January 2014

Reports to: Supervisor – Division **Approved by:** _____

Department: Public Works

POSITION SUMMARY: Operates trucks and other equipment to perform street, sidewalk, and lawn repairs and maintenance, including snow removal; collect branches and debris; perform water and sewer line installation and repair.

POSITION FUNCTIONS:

General

- Receive instructions from supervisor concerning nature of work to be performed.
- Travel to and from work site and prepare site for work.
- Maintain trucks and work area in a clean and orderly condition.
- Operates manual or motorized equipment, saws, breakers, mowers, pumps, shovels, picks, rakes, hammers, and other tools.

Basic Position Functions (B)
(essential)

- Collect branches, leaves, and other debris for disposal.
- Assist in performing maintenance: patch potholes, hot patch pavements, stone alleys, lawn restorations, remove concrete and asphalt pavements, make repairs, etc.
- Operate equipment (mowers, edgers, line trimmers, etc.) for lawn maintenance.
- Assist in installing signs and applying pavement markings, installation and removal of banners, flags, holiday decorations.
- Assist in the installation, repair, and maintenance of water mains, valves, fire hydrants, sewers, manholes, catch basins, etc. and other sewer or water delivery equipment.
- Performs housekeeping duties including sweeping floors, cleaning, washing, mopping, painting, etc.
- Operate equipment/truck to perform snow removal.

This description is not intended to contain every function/responsibility that may be required to be performed by an incumbent in this job. Incumbents are required to perform other related functions as assigned or prescribed by statute.

Basic Position Functions (A)
(essential)

- Includes all Basic Position Functions (B); and

- Has experience and demonstrated competence in one or more of the following areas:

  a. Experience and demonstrated competence in the installation, repair, and maintenance of water mains, valves, hydrants, sewers, manholes, catch basins and other sewer or water delivery equipment;
  b. Experience and demonstrated competence in street maintenance such as hot patching, tree removal, snow removal operations, or landscape maintenance activities, including but not limited to trimming, pruning, planting, landscape layout and design;

- Inspect equipment for proper operation and make minor repairs and adjustments. Complete routine turn reports as required.

- Inform supervision of any equipment irregularities, repairs needed, accidents, etc.

Physical and Visual Activities:
Commonly associated with the performance of the functions of this job.
Standing, walking, sitting, lifting, carrying, pushing, pulling, stooping, kneeling, crouching, handling, reaching, fingering and talking.

Physical Demands:
Commonly associated with the performance of the functions of this job
Able to control the movement of equipment. Must be able to access equipment and perform required inspection and maintenance, assist in field repairs, change attachments, etc. Able to clean equipment, move material, level asphalt. Frequently handle heavy tools and materials up to 100 lbs. in weight.

Able to manipulate hand and foot controls to maneuver equipment in close quarters. Able to use equipment and tools in confined places and over uneven terrain.

Environmental/Atmospheric Conditions:
Commonly associated with the functions of this job.
Exposed to inside and outside weather conditions, hot and cold temperature changes, wet, humidity, noise, vibration and hazards.

Exposed to salt, slag, sand, dirt, sod, grass seed, gravel, concrete and other miscellaneous construction materials; copper, brass, steel and cast iron sewer and plumbing parts; cleaning solvents, debris, refuse, fuel, water, lubricants, etc.

Job Qualification Requirements

Knowledge:
Able to understand instructions; read blueprints; excavation, street, sewer and water installation and repair procedures and safe equipment operating procedures.

Experience:
Over 3 months up to 12 months.

Machine, Tools, Equipment, Software.
½, ¾, 1 ton pick-up trucks; air compressor and jackhammer; wood chipper; sewer rodder; walking, demolition and chain saws along with various hand implements including wheelbarrow, shovel, pick, rake, sledge hammer and miscellaneous small tools.

Licenses/Certifications:
Vehicle operator's license.

This description is not intended to contain every function/responsibility that may be required to be performed by an incumbent in this job. Incumbents are required to perform other related functions as assigned or prescribed by statute.

NONEXEMPT POSITION DESCRIPTION

Title: Sign and Traffic Control Technician **Date:** October 2003

Reports to: Supervisor – Street **Approved by:** _____

Department: Public Works

POSITION SUMMARY: Repair and install signs and safety markings on streets, place barricades for traffic control, maintain traffic control devices.

POSITION FUNCTIONS:

(essential)

- Receive instructions from supervisors concerning the nature of work to be performed.
- Travel to and from work site and prepare site for work
- Install, repair, and remove street signs and apply or remove pavement markings; all pursuant to the Manual on Uniform Traffic Control Devices (MUTCD)
- Operate equipment to repair, install, and remove street signs and apply or remove pavement markings
- Inspect street signs for sight obstruction, reflectivity, proper installation and repair as necessary
- Place barricades for work zone protection pursuant to the MUTCD
- Place barricades as required for community events and parades and perform miscellaneous duties in support thereof (cleanup, holiday decorations, trash removal)
- Inspect crosswalk lights and replace as necessary
- Install Banners, Flags, Semaphores, as necessary
- Operate equipment/truck to perform snow removal operations
- Maintain log of all maintenance and repair work.

(marginal)

- Inspect equipment for proper operation and make minor repairs and adjustments. Complete reports for data entry.
- Inform supervision of any equipment irregularities, repairs needed, accidents, materials required, etc.
- Maintain work area in a clean and orderly condition.

This description is not intended to contain every function/responsibility that may be required to be performed by an incumbent in this job. Incumbents are required to perform other related functions as assigned or prescribed by statute.

Physical and Visual Activities:

Commonly associated with the performance of the functions of this job.

Standing, Walking, Sitting, Lifting, Pushing, Pulling, Stooping, Kneeling, Crouching, Carrying, Reaching, Fingering, Visual-acuity near, Hearing, and Talking.

Physical Demands:

Commonly associated with the performance of the functions of this job.

Able to utilize post pounder, jack hammer, miscellaneous small tools, climb ladder, and other equipement. Lifting, moving and carrying of weights over 5 lbs up to 25 lbs is required 15% to 40% of the time. Able to apply paint and decals to tight tolerances on pavement. Able to use equipment and tools in confined and elevated spaces.

Environmental/Atmospheric Conditions:

Commonly associated with the functions of this job.

Exposed to inside and outside weather conditions.

Exposed to salt, dirt, cleaning solvents, paint, debris, fuel, water, lubricants, etc.

Job Qualification Requirements

Knowledge:

Able to understand equipment and maintenance instructions; Thoroughly familiar with the Indiana Manual on Uniform Traffic Control Devices

Experience:

Demonstrated ability to work independently without direct supervision, Demonstrated ability to communicate effectively with the public, Demonstrated understanding of the operations of the traffic control devices (signs, signals, pavement markings). 1 to 3 years of experience.

Machines, Tools, Equipment, Software:

Utility Truck, various hand tools (pipe wrenches, screw drivers, hand wrenches, drills, hammers, etc), shovel, rake, pick, sledge hammer, post pounder, paint brushes, and paint spraying equipment.

Licenses/Certifications:

Vehicle Driver's License
Commercial Driver's license (may be required)
MUTCD Certification

EXEMPT POSITION DESCRIPTION

Title: Street Sweep Operator

Date: January 1993

Reports to: Supervisor- Streets & Sanitation

Approved By: _____

Department: Public Works

Job Grade:

POSITION SUMMARY: Operates front-end loader, trucks and street sweeper to perform street cleaning and snow removal.

POSITION FUNCTIONS:

(Essential)

1. Receive instructions from supervisor concerning nature of work to be performed.
2. Use steering wheel, hand levers, and/or foot pedals to maneuver truck/tractor, control movement of attachments, etc. to drive implement to and from work sites.
3. Operate street sweeper to perform street cleaning on a designated route and dump debris.
4. Operate street sweeper to perform street cleaning on a designated route and dump debris

(Marginal)

5. Inspect equipment for proper operation and make minor repairs and adjustments to vehicle.
6. Complete routine turn reports as required.
7. Inform supervision of any equipment irregularities, repairs needed, accidents, etc.
8. Maintain tractor and work area in a clean and orderly condition.
9. Perform utility man work (see utility worker job description.)
10. When street sweeping season concludes, incumbent shall perform duties consistent with utility worker/driver.

Physical and Visual Activities:

Commonly associated with the performance of the functions of this job

Standing, Sitting, Carrying, Reaching, Fingering, Talking, Hearing, Visual Acuity-Far, Depth perception, and field vision.

Significant portion of job requires confinement in tractor cab to control the movement of equipment. Must be able to access equipment and perform required inspection and maintenance, assist in field

This description is not intended to contain every function/responsibility that may be required to be performed by an incumbent in this job. Incumbents are required to perform other related functions as assigned or prescribed by statute.

repairs, change attachments, etc. Able to manipulate hand and foot controls to maneuver equipment in close quarters.

Able to judge distances and clearances, monitor equipment operation and recognize hazards. Able to work in low light conditions.

Physical Demands:
Commonly associated with the performance of the functions of this job
No significant demands associated with this job.

Environmental/Atmospheric Conditions:
Commonly associated with the performance of the functions of this job
Exposed to inside and outside weather conditions, cold and hot temperature changes, humidity, noise, vibration, hazards, and fumes.

Job Qualification Requirements

Knowledge:
Able to understand detailed instructions; excavation, street repair and safe equipment operating procedures.

Experience:
Over 1 year up to 3 years

Machines, Tools, Equipment, Software:
Rubber tired tractors with bucket; ½ and ¾ ton pickup trucks; 4, 6, and 10 wheel dump trucks; and various hand implements including shovel, pick, rake, sledge hammer, and misc. small tools.

Licenses/Certifications:
Class B operator's license.

EXEMPT POSITION DESCRIPTION

Title: Assistant Public Works Director **Date:** September 23, 2022

Reports to: Public Works Director **Approved by:** _____

Department: Public Works

POSITION SUMMARY: Under the general supervision of the Director of Public Works, assists with the management of operations, budgeting, and personnel in the Public Works Department.

POSITION FUNCTIONS:

Essential Duties:

- Assist the Public Works Director in planning, development, coordination and implementation of department-wide activities and programs;
- Manage department related budgets and prepare budget proposals;
- Supervise department support staff; assist in hiring, training, motivating, disciplining, evaluating, and terminating employees;
- Represent the Director of Public Works at meetings or functions within the department, with other Town departments, and with outside organizations;
- Interact and coordinate with other Town departments;
- Manage and coordinate department personnel activities;
- Record and maintain department Payroll/HR/CDL records;
- Manage and coordinate department purchasing activities;
- Process department purchases, perform book transfers, and balance accounts;
- Process department insurance claims and accident reports;
- Schedule and track water meter replacements and inventory;
- Coordinate the Public Works computer network, communication system and fuel system;
- Serve on various committees as needed;
- Seek and receive training, as necessary, to keep current on the latest industry standards.

Marginal Duties:

- Respond to public inquiries, complains, and requests;
- Respond to emergencies;
- Perform other duties as assigned.

This description is not intended to contain every function/responsibility that may be required to be performed by an incumbent in this job. Incumbents are required to perform other related functions as assigned or prescribed by statute.

Working Conditions

- Physical Demands: While performing duties of the job, employee typically handles office equipment, computers, objects, or controls; employee will sit or stand for long periods of time.

- Work Environment: Employee will work in a generally comfortable office setting. Great mental effort required daily; frequent exposure to stress caused by the need to meet deadlines.

Machines, Tools, Equipment, Software:

- Automobile or light-duty truck, personal computer and computer software: MS Word, MS Excel, MS Powerpoint, ESRI GIS software, and other computer programs associated with the duties of the position.

Job Qualification Requirements

- **Education:** High school diploma or equivalency. Preferred: Undergraduate degree in public or business administration, Civil Engineering, or related field of education.

- **Knowledge:** Management principles and practices including accounting principles. governmental budgeting and monitoring, computer skills, organizational skills, supervisory skills, interpersonal skills, communication skills (oral and written), and a working knowledge of the Town's municipal operations including water, wastewater, storm water, transportation, fleet and fleet services, as well as other major department functions. Ability to work independently without direct supervision. Ability to communicate effectively with elected and appointed officials, employees, and the public.

- **Experience**: Requires three to five years of management and administrative experience in the public or private sector.

- **Certificates/Licenses:** Valid Driver's license.

ATTACHMENT C

SAFETY, EQUIPMENT, AND CONFERENCE TRAINING

March 2019; Revised June 2019; Revised March 2020; Revised February 2021; Revised January 2024

1/30/2019

Underground Safety: P Job Site Hazards

Bartok, Paul		Peterson, Keith	
Cashman, Bart		Pizzuto, Dennis	
Clayton, Dan		Plucinski, Bill	
Geary, Chris		Rastovsky, Kyle	
Higgins, Kevin		Ruzycki, Robert	
Hoekstra, Rich		Siple, Jeff	
Hurt, Dwight		Slifko, Timothy	
Kokinda, Pete		Teske, Brett	
Krestel, Aaron		Westerlund, Trey	
Lee, Joseph		Williams, Lou	
Limoncu, Koray		Winget, Steven	
Luyster, Bruce			
Martinez, Danny		Bell, Brian	
Maslan, Michael		Gembala, Tim	
Matusik, Sean		Knesek, Mark	
Patricks, Bradley		Mourtides, John	
		Pipta, Mike	

Bertosi

	1/3/2017	1/10/2017	1/17/2017	1/24/2017	1/31/2017	2/7/2017	2/14/2017
	Meeting 1	2	3	4	5	6	7
Bartok	XX	XX	XX	XX	XX	XX	XX
Bell			XX	XX	XX	XX	XX
Cashman	XX	XX	XX	XX	XX	XX	
Clayton						XX	XX
Geary	XX	XX	XX	XX	XX	XX	XX
Gembala	XX	XX	XX	XX	XX		XX
Gerenda	XX	XX	XX	XX	XX	XX	XX
Green		XX		XX	XX	XX	XX
Halton	XX	XX	XX	XX	XX	XX	XX
Hansen			XX	XX	XX		XX
Hoekstra		XX	XX	XX		XX	XX
			XX				
Hurt	XX	XX	XX	XX	XX	XX	XX
Knesek	XX	XX	XX	XX	XX	XX	XX
Kobeszka	XX	XX	XX	XX	XX		XX
Kokinda	XX	XX	XX	XX	XX	XX	XX
Krestel	XX	XX	XX		XX	XX	XX
Luyster		XX					
Martinez	XX	XX	XX	XX	XX	XX	XX
Matusik	XX	XX	XX	XX	XX	XX	XX
Meier							
Mouratides	XX	XX		XX	XX		XX
Orban		XX	XX	XX	XX	XX	XX
Peterson K		XX	XX				
Pipta	XX	XX	XX	XX		XX	XX
Pizzuto	XX	XX	XX	XX	XX	XX	XX
Plucinski	XX	XX	XX	XX	XX	XX	XX
Rastovsky	XX	XX	XX	XX	XX		XX
Siple	XX	XX	XX	XX	XX	XX	XX
Williams	XX	XX	XX	XX	XX	XX	XX
Zufall	XX	XX	XX	XX	XX	XX	XX

Meeting 1 (1-3-15) Cold Weather
Meeting 2 (1-10-16) New Employees
Meeting 3 (1-17-17) Check Before You Move
Meeting 4 (1-24-17) Air Monitoring
Meeting 5 (1-31-17) Don't Give Fire a Chance
Meeting 6 (2-7-17) Foresight Preserves Eyesight
Meeting 7 (2-14-17) Drinking & Drugs
Meeting 8 (2-21-17) Slips and falls
Meeting 9 (2-28-17 Save your Hands

Meeting 10 (3-7-17) Refueling Equipment
Meeting 11 (3-14-17) Check Before You Move
Meeting 12 (3-21-17) Chain Saws
Meeting 13 (3-28-17) Safety Checklist
Meeting 14 (4-4-17) First Aid for Burns
Meeting 15 (4-18-17) Electricity
Meeting 16 (4-25-17) Illumination
Meeting 17 (5-2-17) Pre trip inspection
Meeting 18 (5-9-17) Wheelbarrows
Meeting 19 (5-16-17) Housekeeping & tripping hazards
Meeting 20 (5-23-17) Heat Stress Prevention
Meeting 21 (5-30-17) Check Before You Move
Meeting 22 (6-6-17) Hearing Protection
Meeting 23 (6-13-17) MSDS
Meeting 24 (6-20-17) Motor Vehicles
Meeting 25 (6-27-17) Weather
Meeting 26 (7-5-17) Job Safety Checklist
Meeting 27 (7-11-17) Traffic Control
Meeting 28 (7-18-17) Don't Give Fire a Chance
Meeting 29 (7-25-17) Heat Stroke
Meeting 30 (8-1-17) Gasoline
Meeting 31 (8-8-17) Portable Electric Tools
Meeting 32 (8-15-17) Off-The-Job Safety
Meeting 33 (8-22-17) Back to School
Meeting 34 (8-29-17) From Head to Foot
Meeting 35 (9-5-17) Electrical Path to Groung Missing
Meeting 36 (9-12-17) Horse Play
Meeting 37 (9-19-17) Same Old Alibis'
Meeting 38 (9-26-17) Anticipate Accidents
Meeting 39 (10-3-17) Barricades and Warning Devices
Meeting 40 (10-10-17) Courtesy
Meeting 41 (10-17-17) Personal Protective Equipment
Meeting 42 (10-24-17) Who am I
Meeting 43 (10-31-17) Barricades and Warning Devices
Meeting 44 (11-7-17) Anticipate Accidents
Meeting 45 (11-14-17) Ten Little Fingers
Meeting 46 (11-21-17) Entering and Leaving The Work Area
Meeting 47 (11-28-17) Lifting
Meeting 48 (12-5-17) Eyes, A Priceless Possession
Meeting 49 (12-12-17) Holiday Safety
Meeting 50 (12-19-17) Vehicle Safety
Meeting 51 (12-26-17) Same Old Alibis'

	2/21/2017	2/28/2017	3/7/2017	3/14/2017	3/21/2017	3/28/2017	4/4/2017
	Meeting 8	9	10	11	12	13	14
Bartok	XX		XX	XX	XX	XX	XX
Bell	XX	XX	XX	XX	XX	XX	XX
Cashman	XX	XX		XX	XX	XX	XX
Clayton	XX		XX	XX	XX	XX	XX
Geary	XX	XX	XX	XX	XX	XX	XX
Gembala	XX	XX	XX	XX	XX	XX	XX
Gerenda	XX	XX	XX	XX	XX	XX	XX
Green		XX	XX			XX	XX
Halton	XX	XX	XX	XX	XX	XX	XX
Hansen	XX	XX		XX	XX	XX	XX
Hoekstra		XX	XX	XX	XX	XX	XX
Hurt	XX	XX	XX	XX	XX		XX
Knesek	XX		XX	XX	XX		
Kobeszka	XX	XX	XX	XX	XX	XX	
Kokinda	XX	XX	XX	XX	XX	XX	XX
Krestel	XX	XX	XX	XX		XX	XX
Luyster		XX				XX	XX
Martinez		XX	XX	XX	XX	XX	
Matusik	XX	XX	XX	XX	XX		XX
			XX	XX			
Mouratides	XX		XX	XX	XX	XX	
Orban	XX	XX	XX	XX	XX	XX	
Peterson K							
Pipta	XX	XX	XX		XX	XX	XX
Pizzuto	XX	XX	XX	XX		XX	XX
Plucinski	XX	XX	XX		XX	XX	XX
Rastovsky	XX	XX	XX	XX	XX	XX	XX
Ruzycki			XX			XX	XX
Siple	XX	XX	XX	XX	XX	XX	XX
Williams	XX	XX	XX	XX	XX	XX	XX
Zufall	XX	XX	XX	XX	XX		XX

Meeting 1 (1-3-15) Cold Weather
Meeting 2 (1-10-16) New Employees
Meeting 3 (1-17-17) Check Before You Move
Meeting 4 (1-24-17) Air Monitoring
Meeting 5 (1-31-17) Don't Give Fire a Chance
Meeting 6 (2-7-17) Foresight Preserves Eyesight
Meeting 7 (2-14-17) Drinking & Drugs
Meeting 8 (2-21-17) Slips and Falls
Meeting 9 (2-28-17) Save your hands
Meeting 10 (3-7-17) Refueling Equipment

	4/18/2017	4/25/2017	5/2/2017	5/9/2017	5/16/2017	5/23/2017	5/30/2017
	Meeting 15	16	17	18	19	20	21
Bartok	XX	XX	XX	XX	XX	XX	XX
Bell	XX	XX	XX	XX		XX	
Cashman	XX	XX	XX	XX	XX	XX	
Clayton	XX	XX	XX	XX	XX	XX	XX
Geary	XX	XX	XX	XX	XX	XX	XX
Gembala	XX		XX	XX	XX	XX	XX
Green	XX	XX					
Halton	XX	XX	XX	XX	XX		XX
Hoekstra	XX	XX	XX		XX		XX
Hurt	XX	XX	XX	XX	XX	XX	XX
Knesek	XX	XX	XX				XX
Kobeszka	XX	XX					
Kokinda		XX	XX	XX	XX	XX	
Krestel	XX	XX	XX	XX	XX	XX	XX
Luyster						XX	XX
Martinez	XX	XX	XX	XX	XX	XX	XX
Matusik	XX	XX	XX		XX	XX	XX
Mouratides	XX	XX	XX	XX	XX	XX	XX
Orban	XX	XX	XX	XX	XX	XX	XX
Peterson K				XX			
Pipta	XX						
Pizzuto	XX	XX	XX	XX	XX	XX	
Plucinski	XX	XX	XX	XX	XX	XX	XX
Rastovsky	XX	XX	XX	XX	XX	XX	XX
Ruzycki	XX	XX	XX	XX	XX	XX	XX
Siple		XX	XX	XX			XX
Teske						XX	XX
Westerlund							
Williams	XX	XX	XX	XX	XX	XX	XX
Zufall	XX	XX	XX	XX	XX	XX	XX

Meeting 1 (1-3-15) Cold Weather
Meeting 2 (1-10-16) New Employees
Meeting 3 (1-17-17) Check Before You Move
Meeting 4 (1-24-17) Air Monitoring
Meeting 5 (1-31-17) Don't Give Fire a Chance
Meeting 6 (2-7-17) Foresight Preserves Eyesight
Meeting 7 (2-14-17) Drinking & Drugs
Meeting 8 (2-21-17) Slips and Falls
Meeting 9 (2-28-17) Save your hands
Meeting 10 (3-7-17) Refueling Equipment

	6/6/2017	6/13/2017	6/20/2017	6/27/2017	7/4/2017	7/11/2017	7/18/2017
	Meeting 22	23	24	25	26	27	28
Bartok	XX	XX	XX	XX		XX	XX
Bell	XX	XX	XX	XX			XX
Cashman				XX		XX	XX
Clayton	XX	XX		XX	XX	XX	
Geary	XX		XX	XX	XX	XX	XX
Gembala	XX	XX	XX		XX	XX	XX
Green							
Halton	XX	XX	XX	XX		XX	XX
Hoekstra	XX	XX	XX	XX		XX	XX
Hurt	XX	XX	XX	XX	XX	XX	XX
Knesek	XX	XX	XX	XX		XX	XX
Kobeszka		XX				XX	
Kokinda	XX	XX	XX	XX	XX	XX	XX
Krestel	XX	XX	XX	XX	XX		XX
Luyster	XX	XX	XX	XX	XX		XX
Martinez	XX	XX			XX	XX	XX
Matusik	XX	XX	XX	XX	XX	XX	
Mouratides	XX	XX	XX	XX	XX		XX
Orban	XX	XX	XX	XX	XX	XX	XX
Peterson K	XX					XX	XX
Pipta	XX		XX				
Pizzuto	XX	XX		XX	XX		XX
Plucinski	XX	XX	XX	XX	XX	XX	
Rastovsky	XX	XX		XX	XX	XX	XX
Ruzycki	XX	XX	XX	XX	XX	XX	XX
Siple	XX	XX		XX			XX
Teske	XX	XX	XX	XX	XX	XX	XX
Westerlund	XX	XX	XX	XX		XX	XX
Williams	XX	XX	XX	XX		XX	XX
Zufall	XX	XX		XX		XX	XX

Meeting 1 (1-3-15) Cold Weather
Meeting 2 (1-10-16) New Employees
Meeting 3 (1-17-17) Check Before You Move
Meeting 4 (1-24-17) Air Monitoring
Meeting 5 (1-31-17) Don't Give Fire a Chance
Meeting 6 (2-7-17) Foresight Preserves Eyesight
Meeting 7 (2-14-17) Drinking & Drugs
Meeting 8 (2-21-17) Slips and Falls
Meeting 9 (2-28-17) Save your hands
Meeting 10 (3-7-17) Refueling Equipment

	7/25/2017	8/1/2017	8/8/2017	8/15/2017	8/22/2017	8/29/2017	9/5/2017
	Meeting 29	30	31	32	33	34	35
Bartok	XX	XX			XX	XX	XX
Bell		XX	XX	XX	XX	XX	XX
Cashman			XX		XX	XX	
Clayton	XX	XX	XX	XX	XX	XX	XX
Geary	XX	XX	XX	XX		XX	XX
Gembala		XX	XX	XX	XX	XX	
Green							
Halton	XX	XX	XX	XX	XX		XX
Hoekstra	XX		XX	XX		XX	
Hurt	XX	XX	XX	XX	XX	XX	XX
Knesek			XX		XX	XX	XX
Kobeszka							
Kokinda	XX	XX	XX	XX	XX		XX
Krestel	XX	XX	XX	XX	XX	XX	XX
Luyster	XX						
Martinez	XX		XX	XX	XX		XX
Matusik	XX	XX	XX	XX	XX	XX	XX
Mouratides		XX	XX	XX	XX		XX
Orban	XX	XX	XX	XX	XX	XX	XX
Peterson K	XX	XX	XX	XX	XX	XX	XX
Pipta		XX					XX
Pizzuto	XX		XX	XX	XX	XX	XX
Plucinski	XX	XX	XX	XX		XX	XX
Rastovsky	XX	XX	XX	XX	XX	XX	XX
Ruzycki	XX	XX	XX	XX	XX	XX	XX
Siple					XX	XX	XX
Teske	XX	XX	XX				
Westerlund	XX	XX	XX		XX		XX
Williams		XX	XX	XX	XX	XX	XX
Zufall		XX	XX	XX		XX	

Meeting 1 (1-3-15) Cold Weather
Meeting 2 (1-10-16) New Employees
Meeting 3 (1-17-17) Check Before You Move
Meeting 4 (1-24-17) Air Monitoring
Meeting 5 (1-31-17) Don't Give Fire a Chance
Meeting 6 (2-7-17) Foresight Preserves Eyesight
Meeting 7 (2-14-17) Drinking & Drugs
Meeting 8 (2-21-17) Slips and Falls
Meeting 9 (2-28-17) Save your hands
Meeting 10 (3-7-17) Refueling Equipment

	9/12/2017	9/19/2017	9/26/2017	10/3/2017	10/10/2017	10/17/2017	10/24/2017
	Meeting 36	37	38	39	40	41	42
Bartok		XX	XX	XX			XX
Bell		XX	XX	XX	XX	XX	XX
Cashman	XX		XX			XX	XX
Clayton	XX	XX	XX	XX	XX	XX	XX
Geary	XX	XX	XX	XX	XX	XX	XX
Gembala	XX	XX		XX	XX	XX	XX
Green	XX		XX	XX	XX	XX	XX
Halton		XX		XX	XX	XX	XX
Higgins						XX	XX
Hoekstra	XX	XX	XX	XX	XX	XX	XX
Hurt		XX	XX	XX	XX	XX	XX
Knesek	XX		XX		XX	XX	
Kobeszka			XX			XX	XX
Kokinda	XX	XX	XX	XX	XX	XX	XX
Krestel	XX	XX	XX	XX	XX	XX	XX
Luyster							
Martinez	XX		XX	XX		XX	XX
Matusik	XX	XX	XX	XX	XX	XX	XX
Mouratides	XX		XX				XX
Orban	XX	XX	XX	XX	XX	XX	XX
Patricks						XX	XX
Peterson K	XX	XX	XX		XX	XX	XX
Pipta				XX		XX	XX
Pizzuto		XX		XX	XX		XX
Plucinski	XX	XX		XX	XX	XX	XX
Rastovsky	XX	XX	XX	XX	XX	XX	XX
Ruzycki	XX	XX	XX	XX	XX	XX	XX
Siple		XX		XX	XX	XX	XX
Teske							
Westerlund	XX	XX	XX				
Williams	XX	XX	XX	XX	XX		
Zufall	XX	XX	XX	XX	XX	XX	XX

Meeting 1 (1-3-15) Cold Weather
Meeting 2 (1-10-16) New Employees
Meeting 3 (1-17-17) Check Before You Move
Meeting 4 (1-24-17) Air Monitoring
Meeting 5 (1-31-17) Don't Give Fire a Chance
Meeting 6 (2-7-17) Foresight Preserves Eyesight
Meeting 7 (2-14-17) Drinking & Drugs
Meeting 8 (2-21-17) Slips and Falls
Meeting 9 (2-28-17) Save your hands
Meeting 10 (3-7-17) Refueling Equipment

	10/31/2017	11/7/2017	11/14/2017	11/21/2017	11/28/2017	12/5/2017	12/12/2017
	Meeting 43	44	45	46	47	48	49
Bartok	XX	XX				XX	XX
Bell	XX	XX	XX		XX	XX	XX
Cashman		XX	XX			XX	XX
Clayton	XX	XX					XX
Geary	XX	XX	XX	XX	XX	XX	
Gembala	XX		XX		XX	XX	XX
Green	XX	XX	XX	XX			
Halton	XX					XX	XX
Higgins	XX	XX		XX		XX	XX
Hoekstra	XX	XX			XX	XX	XX
Hurt	XX	XX	XX				XX
Knesek		XX		XX	XX	XX	XX
Kobeszka					XX	XX	XX
Kokinda	XX	XX	XX	XX		XX	XX
Krestel	XX	XX					XX
Luyster							
Martinez	XX	XX	XX	XX		XX	XX
Matusik	XX	XX				XX	XX
Mouratides					XX	XX	XX
Orban	XX	XX	XX	XX	XX	XX	XX
Patricks	XX	XX	XX	XX	XX	XX	XX
Peterson K	XX		XX	XX	XX	XX	
Pipta				XX			
Pizzuto						XX	XX
Plucinski	XX	XX		XX	XX	XX	XX
Rastovsky	XX	XX	XX	XX	XX	XX	XX
Ruzycki	XX	XX		XX	XX	XX	XX
Siple	XX	XX	XX		XX	XX	XX
Slifko	XX	XX				XX	XX
Teske							
Westerlund						XX	
Williams			XX		XX	XX	XX
Zufall	XX	XX		XX	XX	XX	XX

Meeting 1 (1-3-15) Cold Weather
Meeting 2 (1-10-16) New Employees
Meeting 3 (1-17-17) Check Before You Move
Meeting 4 (1-24-17) Air Monitoring
Meeting 5 (1-31-17) Don't Give Fire a Chance
Meeting 6 (2-7-17) Foresight Preserves Eyesight
Meeting 7 (2-14-17) Drinking & Drugs
Meeting 8 (2-21-17) Slips and Falls
Meeting 9 (2-28-17) Save your hands

	12/19/2017	12/26/2017					
	Meeting 50	51					
Bartok	XX	XX					
Bell		XX					
Cashman		XX					
Clayton	XX	XX					
Geary	XX	XX					
Gembala	XX						
Halton	XX	XX					
Higgins	XX	XX					
Hoekstra	XX	XX					
Hurt	XX	XX					
Kinley	XX	XX					
Knesek							
Kobeszka		XX					
Kokinda	XX	XX					
Krestel	XX	XX					
Luyster							
Martinez	XX	XX					
Matusik	XX						
Mouratides	XX	XX					
Orban	XX	XX					
Patricks	XX	XX					
Peterson K	XX	XX					
Pipta		XX					
Pizzuto							
Plucinski	XX	XX					
Rastovsky	XX						
Ruzycki	XX	XX					
Siple	XX	XX					
Slifko	XX	XX					
Teske							
Westerlund	XX	XX					
Williams							
Zufall	XX	XX					

Meeting 1 (1-3-15) Cold Weather
Meeting 2 (1-10-16) New Employees
Meeting 3 (1-17-17) Check Before You Move
Meeting 4 (1-24-17) Air Monitoring
Meeting 5 (1-31-17) Don't Give Fire a Chance
Meeting 6 (2-7-17) Foresight Preserves Eyesight
Meeting 7 (2-14-17) Drinking & Drugs
Meeting 8 (2-21-17) Slips and Falls
Meeting 9 (2-28-17) Save your hands

	1/2/2018	1/9/2018	1/16/2018	1/23/2018	1/30/2018	2/6/2018	2/13/2018
	Meeting 1	2	3	4	5	6	7
Bartok	XX	XX	XX	XX	XX		
Bell		XX	XX	XX	XX	XX	XX
Cashman	XX	XX	XX	XX			
Clayton	XX	XX	XX	XX	XX	XX	XX
Geary	XX	XX	XX	XX	XX	XX	XX
Gembala		XX	XX	XX	XX		XX
	XX						
Higgins	XX	XX	XX	XX	XX	XX	XX
Hoekstra	XX	XX	XX	XX	XX	XX	XX
Hurt	XX	XX	XX	XX	XX	XX	XX
Kinley	XX		XX	XX			
Knesek	XX						XX
Kobeszka		XX	XX	XX		XX	XX
Kokinda	XX	XX	XX	XX	XX	XX	XX
Krestel	XX	XX	XX	XX	XX	XX	XX
Luyster							
Martinez	XX	XX	XX	XX	XX	XX	XX
Matusik	XX	XX	XX	XX	XX	XX	
Mouratides	XX	XX	XX	XX			
Orban	XX	XX	XX	XX	XX	XX	XX
Patricks	XX	XX	XX		XX	XX	XX
Peterson K	XX	XX	XX	XX	XX	XX	XX
Pipta				XX			XX
Pizzuto	XX	XX	XX	XX	XX	XX	XX
Plucinski	XX	XX	XX	XX	XX	XX	XX
Rastovsky	XX	XX	XX	XX	XX	XX	XX
Ruzycki	XX	XX	XX	XX	XX	XX	
Siple	XX	XX	XX	XX	XX	XX	XX
Slifko	XX	XX	XX	XX	XX	XX	XX
Teske		XX	XX	XX	XX	XX	XX
Westerlund	XX	XX	XX	XX	XX	XX	XX
Williams					XX	XX	XX
Zufall	XX	XX	XX	XX	XX	XX	XX

Meeting 1 (1-2-18) Cold Weather
Meeting 2 (1-9-18) Check Before You Move
Meeting 3 (1-16-18) Don't Give Fire a Chance
Meeting 4 (1-23-18) Foresight Preserves Eyesight
Meeting 5 (1-30-18) Drinking and Drugs
Meeting 6 (2-6-18) Slips and Falls
Meeting 7 (2-13-18) Save Your Hands

Meeting 10 (3-6-18) Chainsaws
Meeting 11 (3-13-18) Spotters
Meeting 12 (3-20-18) Strains in the construction industry
Meeting 13 (3-27-18) Housekeeping on the job
Meeting 14 (4-3-18) Dress for the job
Meeting 15 (4/10/18) Vehicle Safety
Meeting 16 (4/17/18) Excavations and Trenching
Meeting 17 (4/24/18)
Meeting 18 (5/1/18) Traffic Control
Meeting 19 (5/8/18) Teamwork
Meeting 20 (5/15/18 Eye Protection
Meeting 21 (5/22/18) 10 Commandments of good safty
Meeting 22 (5/29/18) Heat illness prevention
Meeting 23 (6/5/18) Motor Vehicles
Meeting 24 (6/12/18) Be alert on moving equipment
Meeting 25 (6/19/18) What can you do to prevent accidents
Meeting 26 (6/26/18) Safe use of hand tools
Meeting 27 (7/3/18) Minor injuries
Meeting 28 (7/10/18 MSDS
Meeting 29 (7/17/18) Do you know safty
Meeting 30 (7/24/18) Preventive Maintainance
Meeting 31 (7/31/18) Lifting
Meeting 32 (8/7/18) Identifying construction hazards
Meeting 33 (8/14/18) Gasoline safety
Meeting 34 (8/21/18) Job training a must
Meeting 35 (8/28/18) Overhead loads
meeting 36 (9/4/18) Weather
Meeting 37 (9/11/18) 9 1 1
Meeting 38 (9/18/18) Look before you leap
Meeting 39 (9/25/18) Off the job safty
Meeting 40 (10/2/18) Ladder Tips
Meeting 41 (10/9/18) Near Miss
Meeting 42 (10/16/18) The right boot for the job
Meeting 43 (10/23/18) Standard signals
Meeting 44 (10/30/18) Wheelbarrows
Meeting 45 (11/6/18) S Shovel Safety
Meeting 46 (11/13/18) Falling Objects
Meeting 47 (11/20/18) Back to the Basics
Meeting 48 (11/27/18) Sudden stops
Meeting 49 (12/4/18) Wrenches
Meeting 50 (12/11/18) Snow Plow Driver Safety
Meeting 51 (12/18/18) The Fire Triangle

	2/20/2018 Meeting 8	2/27/2018 9	3/6/2018 10	3/13/2018 11	3/20/2018 12	3/27/2018 13	4/3/2018 14	4/10/2018 15
Bartok	XX	XX	XX	XX	XX			
Bell		XX	XX	XX	XX	XX	XX	XX
Cashman	XX	XX	XX	XX				
Clayton	XX	XX	XX	XX	XX	XX	XX	XX
Geary	XX	XX	XX	XX	XX	XX	XX	XX
Gembala		XX	XX	XX	XX		XX	XX
	XX							
Higgins	XX	XX	XX	XX	XX	XX	XX	XX
Hoekstra	XX	XX	XX	XX	XX	XX	XX	XX
Hurt	XX	XX	XX	XX	XX	XX	XX	XX
Kinley	XX		XX	XX				
Knesek	XX						XX	XX
Kobeszka		XX	XX	XX		XX	XX	XX
Kokinda	XX	XX	XX	XX	XX	XX	XX	XX
Krestel	XX	XX	XX	XX	XX	XX	XX	XX
Luyster								
Martinez	XX	XX	XX	XX	XX	XX	XX	XX
Matusik	XX	XX	XX	XX	XX	XX		
Mouratides	XX	XX	XX	XX				
Orban	XX	XX	XX	XX	XX	XX	XX	XX
Patricks	XX	XX	XX		XX	XX	XX	XX
Peterson K	XX	XX	XX	XX	XX	XX	XX	XX
Pipta				XX			XX	XX
Pizzuto	XX	XX	XX	XX	XX	XX	XX	XX
Plucinski	XX	XX	XX	XX	XX	XX	XX	XX
Rastovsky	XX	XX	XX	XX	XX	XX	XX	XX
Ruzycki	XX	XX	XX	XX	XX	XX		
Siple	XX	XX	XX	XX	XX	XX	XX	XX
Slifko	XX	XX	XX	XX	XX	XX	XX	XX
Teske		XX	XX	XX	XX	XX	XX	XX
Westerlund	XX	XX	XX	XX	XX	XX	XX	XX
Williams					XX	XX	XX	XX
Zufall	XX	XX	XX	XX	XX	XX	XX	XX

Meeting 8 (2/20/18) Refueling Equipment
Meeting 9 (2/27/18) Check before you move
Meeting 10 (3/6/18) Chainsaws
Meeting 11 (3/13/18) Spotters
Meeting 12 (3/20/18) Eye Protection
Meeting 13 (3/27/18) Housekeeping on the job
Meeting 14 (4/3/18) Dress for the job

	4/17/2018	4/24/2018	5/1/2018	5/8/2018	5/15/2018	5/22/2018	5/29/2018	6/5/2018
	Meeting 16	17	18	19	20	21	22	23
Bartok	XX	XX	XX		XX	XX		XX
Bell	XX	XX	XX	XX	XX		XX	XX
Cashman	XX	XX	XX	XX	XX	XX	XX	XX
Clayton	XX	XX	XX	XX	XX	XX	XX	XX
Geary	XX	XX	XX	XX	XX	XX	XX	XX
Gembala	XX	XX	XX	XX	XX	XX	XX	XX
Higgins	XX	XX	XX	XX	XX	XX	XX	XX
Hoekstra	XX	XX	XX	XX	XX	XX	XX	XX
Hurt	XX		XX	XX	XX	XX	XX	XX
Knesek	XX		XX	XX	XX	XX	XX	XX
Kokinda		XX	XX	XX	XX		XX	
Krestel	XX	XX	XX	XX	XX	XX	XX	XX
Luyster	XX		XX	XX	XX	XX	XX	XX
Martinez	XX			XX	XX	XX	XX	XX
Maslan				XX	XX	XX	XX	XX
Matusik	XX	XX	XX	XX	XX	XX	XX	XX
Mouratides	XX	XX	XX		XX	XX	XX	XX
Orban	XX	XX	XX	XX	XX		XX	XX
Patricks	XX	XX		XX	XX	XX		XX
Peterson	XX	XX	XX	XX	XX		XX	XX
Pipta	XX			XX	XX	XX	XX	XX
Pizzuto	XX	XX	XX	XX	XX	XX	XX	XX
Plucinski	XX	XX	XX		XX	XX	XX	XX
Rastosky	XX	XX	XX	XX		XX		XX
Ruzycki	XX	XX	XX	XX	XX	XX	XX	
Siple	XX	XX	XX	XX	XX	XX	XX	XX
Slifko	XX	XX	XX	XX	XX	XX	XX	XX
Teske	XX		XX	XX		XX	XX	XX
Webb								
Westerlund	XX	XX	XX		XX		XX	XX
Williams	XX	XX			XX	XX	XX	XX
Zufall	XX	XX			XX	XX	XX	XX

Meeting 1 (1-2-18) Cold Weather
Meeting 2 (1-9-18) Check Before You Move
Meeting 3 (1-16-18) Don't Give Fire a Chance
Meeting 4 (1-23-18) Foresight Preserves Eyesight
Meeting 5 (1-30-18) Drinking and Drugs
Meeting 6 (2-6-18) Slips and Falls
Meeting 7 (2-13-18) Save Your Hands
Meeting 8 (2-20-18) Refueling Equipment
Meeting 9 (2-27-18) Check before you move

	6/12/2018	6/19/2018	6/26/2018	7/3/2018	7/10/2018	7/17/2018	7/24/2018	
	Meeting 24	25	26	27	28	29	30	
Bartok					XX	XX	XX	
Bell	XX	XX		XX	XX	XX		
Cashman	XX	XX	XX		XX	XX	XX	
Clayton	XX		XX	XX	XX	XX	XX	
Geary	XX	XX	XX	XX	XX	XX	XX	
Gembala	XX	XX	XX			XX	XX	
Higgins		XX	XX	XX	XX	XX	XX	
Hoekstra			XX	XX	XX	XX	XX	
Hurt	XX	XX	XX		XX	XX	XX	
Knesek	XX	XX	XX		XX	XX	XX	
Kokinda	XX	XX	XX	XX	XX	XX	XX	
Krestel	XX	XX	XX		XX	XX		
Luyster				XX	XX	XX	XX	
Martinez	XX	XX	XX	XX	XX	XX		
Maslan				XX	XX	XX	XX	
Matusik	XX		XX	XX	XX	XX	XX	
Mouratides	XX	XX	XX		XX	XX	XX	
Patricks	XX	XX	XX	XX	XX	XX	XX	
Peterson		XX	XX			XX		
Pipta	XX	XX				XX	XX	
Pizzuto		XX	XX	XX	XX		XX	
Plucinski	XX	XX	XX	XX	XX	XX	XX	
Rastosky	XX	XX	XX	XX			XX	
Ruzycki	XX	XX	XX	XX	XX	XX	XX	
Siple	XX	XX	XX	XX				
Slifko		XX	XX	XX	XX	XX	XX	
Teske					XX			
Webb								
Westerlund	XX	XX	XX				XX	
Williams	XX	XX	XX			XX	XX	
Zufall	XX	XX	XX	XX	XX	XX	XX	

Meeting 1 (1-2-18) Cold Weather
Meeting 2 (1-9-18) Check Before You Move
Meeting 3 (1-16-18) Don't Give Fire a Chance
Meeting 4 (1-23-18) Foresight Preserves Eyesight
Meeting 5 (1-30-18) Drinking and Drugs
Meeting 6 (2-6-18) Slips and Falls
Meeting 7 (2-13-18) Save Your Hands
Meeting 8 (2-20-18) Refueling Equipment
Meeting 9 (2-27-18) Check before you move
Meeting 10 (3-6-18) Chainsaws

	7/31/2018 Meeting 31	8/7/2018 32	8/14/2018 33	8/21/2018 34	8/28/2018 35	9/4/2018 36	9/11/2018 37
Bartok	XX			XX	XX	XX	XX
Bell	XX			XX	XX	XX	XX
Cashman	XX	XX		XX	XX		XX
Clayton		XX	XX	XX	XX	XX	XX
Geary	XX	XX	XX	XX			XX
Gembala	XX	XX		XX	XX	XX	
Higgins							XX
Hoekstra		XX					XX
Hurt	XX		XX	XX	XX	XX	XX
Knesek		XX	XX	XX	XX	XX	
Kokinda	XX				XX	XX	XX
Krestel	XX	XX		XX	XX	XX	XX
Luyster					XX		
Martinez		XX		XX	XX	XX	XX
Maslan	XX	XX				XX	XX
Matusik						XX	XX
Mouratides	XX	XX	XX		XX	XX	XX
Patricks		XX	XX		XX		
Peterson	XX	XX	XX	XX		XX	XX
Pipta	XX	XX	XX	XX			XX
Pizzuto	XX	XX	XX	XX	XX	XX	XX
Plucinski	XX	XX	XX	XX	XX	XX	
Rastosky	XX	XX	XX	XX	XX		XX
Ruzycki	XX	XX	XX	XX	XX		XX
Siple	XX	XX		XX	XX	XX	XX
Slifko	XX	XX	XX	XX	XX	XX	XX
Teske		XX			XX		XX
Webb							
Westerlund	XX	XX	XX	XX	XX	XX	XX
Williams	XX	XX	XX		XX	XX	XX
Zufall	XX	XX		XX	XX	XX	XX

Meeting 31	(7/31/18)	Lifting
Meeting 32	(8/7/18)	Identifying construction hazards
Meeting 33	(8/14/18)	Gasoline safety
Meeting 34	(8/21/18)	Job training a must
Meeting 35	(8/28/18)	Overhead loads
Meeting 36	(9/4/18)	Weather
Meeting 37	(9/11/18)	9 1 1

	9/18/2018	9/25/2018	10/2/2018	10/9/2018	10/16/2018	10/23/2018	10/30/2018
	Meeting 38	39	40	41	42	43	44
Bartok	XX	XX	XX	XX	XX	XX	XX
Bell	XX	XX	XX	XX	XX	XX	XX
Cashman	XX	XX	XX			XX	
Clayton	XX	XX	XX	XX	XX	XX	XX
Geary	XX	XX	XX	XX	XX	XX	XX
Gembala	XX	XX	XX	XX	XX	XX	XX
Higgins	XX	XX	XX	XX	XX		XX
Hoekstra	XX	XX		XX	XX	XX	XX
Hurt	XX	XX	XX	XX	XX		XX
Knesek	XX	XX	XX		XX		XX
Kokinda	XX	XX			XX	XX	XX
Krestel	XX	XX	XX	XX	XX	XX	XX
Luyster						XX	
Martinez	XX	XX	XX	XX	XX	XX	XX
Maslan	XX	XX	XX	XX	XX	XX	XX
Matusik	XX	XX	XX	XX	XX	XX	XX
Mouratides	XX	XX		XX			XX
Patricks	XX	XX	XX	XX	XX	XX	XX
Peterson	XX	XX	XX	XX			XX
Pipta	XX			XX	XX	XX	
Pizzuto	XX	XX	XX		XX	XX	
Plucinski	XX		XX	XX	XX	XX	XX
Rastosky	XX	XX	XX	XX	XX	XX	XX
Ruzycki	XX	XX	XX	XX	XX	XX	XX
Siple	XX		XX	XX	XX		XX
Slifko	XX	XX	XX	XX	XX	XX	XX
Teske							XX
Webb							
Westerlund	XX	XX	XX	XX	XX	XX	XX
Williams	XX	XX	XX	XX	XX	XX	XX

Meeting 1 (1-2-18) Cold Weather
Meeting 2 (1-9-18) Check Before You Move
Meeting 3 (1-16-18) Don't Give Fire a Chance
Meeting 4 (1-23-18) Foresight Preserves Eyesight
Meeting 5 (1-30-18) Drinking and Drugs
Meeting 6 (2-6-18) Slips and Falls
Meeting 7 (2-13-18) Save Your Hands
Meeting 8 (2-20-18) Refueling Equipment
Meeting 9 (2-27-18) Check before you move
Meeting 10 (3-6-18) Chainsaws

	11/6/2018	11/13/2018	11/20/2018	11/27/2018	12/4/2018	12/11/2018	12/18/2018
	Meeting 45	46	47	48	49	50	51
Bartok	XX	XX	XX	XX	XX	XX	XX
Bell	XX	XX		XX	XX	XX	XX
Cashman	XX				XX		XX
Clayton		XX	XX	XX	XX	XX	XX
Geary	XX	XX	XX	XX			XX
Gembala	XX	XX		XX	XX	XX	
Higgins							XX
Hoekstra		XX					XX
Hurt	XX		XX	XX	XX	XX	XX
Knesek		XX	XX	XX	XX	XX	
Kokinda	XX				XX	XX	XX
Krestel	XX	XX		XX	XX	XX	XX
Luyster					XX		
Martinez	XX	XX	XX	XX	XX	XX	XX
Maslan	XX	XX					
Matusik						XX	XX
Mouratides	XX	XX	XX		XX	XX	XX
Patricks	XX				XX	XX	XX
Peterson	XX	XX	XX	XX			
Pipta	XX	XX	XX	XX			XX
Pizzuto						XX	XX
Plucinski	XX	XX	XX	XX	XX	XX	
Rastosky	XX			XX	XX		XX
Ruzycki	XX		XX	XX	XX		XX
Siple	XX	XX		XX	XX	XX	XX
Slifko						XX	XX
Teske		XX			XX		XX
Webb							
Winget		XX	XX	XX	XX		XX
Westerlund	XX	XX	XX	XX	XX	XX	XX
Williams	XX	XX	XX		XX	XX	XX

Meeting 1 (1-2-18) Cold Weather
Meeting 2 (1-9-18) Check Before You Move
Meeting 3 (1-16-18) Don't Give Fire a Chance
Meeting 4 (1-23-18) Foresight Preserves Eyesight
Meeting 5 (1-30-18) Drinking and Drugs
Meeting 6 (2-6-18) Slips and Falls
Meeting 7 (2-13-18) Save Your Hands
Meeting 8 (2-20-18) Refueling Equipment
Meeting 9 (2-27-18) Check before you move

Highland Sanitary District - Training Completion Schedule

Employee	Date	Exp. Date	Training Topic	Trainer	Hours
Bartok, Paul	11/11/2015	11/11/18	Underground Storage Tank "C" Operator Training	Robert Johnsen	
Bell, Brian	11/11/2015	11/11/18	Underground Storage Tank "C" Operator Training	Robert Johnsen	
Bell, Brian	10/11/2018		2018 IEP Safety Seminar	Robert Davidson	4
Cashman, Bart	11/11/2015	11/11/18	Underground Storage Tank "C" Operator Training	Robert Johnsen	
Cashman, Bart	4/25/2017		MEI Corp. Clinic	Rick May	
Geary, Chris	11/11/2015	11/11/18	Underground Storage Tank "C" Operator Training	Robert Johnsen	
Geary, Chris	10/11/2018		2018 IEP Safety Seminar	Robert Davidson	4
Gembala, Tim	10/11/2018		2018 IEP Safety Seminar	Robert Davidson	4
Gembala, Tim	11/1/2012	11/01/17	IRMCA Jobsite Washout Training	Jerry Larson	
Gembala, Tim		06/30/17	Grade DSL Water Dist. System Operator		
Higgins, Kevin	10/11/2018		2018 IEP Safety Seminar	Robert Davidson	4
Higgins, Kevin	9/11-9/13/18		Vactor 2100 Plus Operations		
Hurt, Dwight	11/11/2015	11/11/18	Underground Storage Tank "C" Operator Training	Robert Johnsen	
Knesek, Mark	3/5/2017		INDOT Local Public Agency: Basic 101	INDOT University	
Knesek, Mark	12/12/2017		Asphalt PASER for Practitioners	Acus Learning Systems	2.5
Kokinda, Peter	11/11/2015	11/11/18	Underground Storage Tank "C" Operator Training	Robert Johnsen	
Krestel, Aaron	11/11/2015	11/11/18	Underground Storage Tank "C" Operator Training	Robert Johnsen	
Luyster, Bruce	11/11/2015	11/11/18	Underground Storage Tank "C" Operator Training	Robert Johnsen	
Martinez, Danny	11/11/2015	11/11/18	Underground Storage Tank "C" Operator Training	Robert Johnsen	
Martinez, Danny	5/10/2017		Competent Person Trenching and Excavating	Thomas C. Moore Jr.	8
Matusik, Sean	10/11/2018		2018 IEP Safety Seminar	Robert Davidson	4
Matusik, Sean	11/11/2015	11/11/18	Underground Storage Tank "C" Operator Training	Robert Johnsen	
Peterson, Keith	10/11/2018		2018 IEP Safety Seminar	Robert Davidson	4
Pipta, Mike	7/1/2016		RTCR Level 2 Assessments	Artemis Nikolauo	
Pizzuto, Dennis	11/11/2015	11/11/18	Underground Storage Tank "C" Operator Training	Robert Johnsen	
Plucinski, Bill	11/11/2015	11/11/18	Underground Storage Tank "C" Operator Training	Robert Johnsen	
Plucinski, Bill	4/25/2017		MEI Corp. Clinic	Rick May	
Rastovsky, Kyle	5/10/2017		Competent Person Trenching and Excavating	Thomas C. Moore Jr.	
Rastovsky, Kyle	6/19-6/21/17		Vactor 2100 Plus Operations		
Ruzycki, Bob	9/11-9/13/18		Vactor 2100 Plus Operations		
Ruzycki, Bob	10/11/2018		2018 IEP Safety Seminar	Robert Davidson	4
Siple, Jeff	11/11/2015	11/11/18	Underground Storage Tank "C" Operator Training	Robert Johnsen	
Siple, Jeff	10/11/2018		2018 IEP Safety Seminar	Robert Davidson	4
Slifko, Tim	10/11/2018		2018 IEP Safety Seminar	Robert Davidson	4
Westerlund, Trey	10/11/2018		2018 IEP Safety Seminar	Robert Davidson	4
Williams, Lou	11/11/2015	11/11/18	Underground Storage Tank "C" Operator Training	Robert Johnsen	

1/30/2019

Underground Safety: Personal Protection

Bartok, Paul		Peterson, Keith	
Cashman, Bart		Pizzuto, Dennis	
Clayton, Dan		Plucinski, Bill	
Geary, Chris		Rastovsky, Kyle	
Higgins, Kevin		Ruzycki, Robert	
Hoekstra, Rich		Siple, Jeff	
Hurt, Dwight		Slifko, Timothy	
Kokinda, Pete		Teske, Brett	
Krestel, Aaron		Westerlund, Trey	
Lee, Joseph		Williams, Lou	
Limoncu, Koray		Winget, Steven	
Luyster, Bruce			
Martinez, Danny		Bell, Brian	
Maslan, Michael		Gembala, Tim	
Matusik, Sean		Knesek, Mark	
Patricks, Bradley		Mourtides, John	
		Pipta, Mike	

1/30/2019

The Snowfighters

Bartok, Paul		Peterson, Keith	
Cashman, Bart	Bart Cashman	Pizzuto, Dennis	
Clayton, Dan		Plucinski, Bill	
Geary, Chris		Rastovsky, Kyle	
Higgins, Kevin		Ruzycki, Robert	
Hoekstra, Rich	Rich Hoekstra	Siple, Jeff	
Hurt, Dwight		Slifko, Timothy	
Kokinda, Pete	Peter Kokinda	Teske, Brett	
Krestel, Aaron		Westerlund, Trey	
Lee, Joseph	Joseph Lee	Williams, Lou	
Limoncu, Koray		Winget, Steven	
Luyster, Bruce			
Martinez, Danny		Bell, Brian	
Maslan, Michael		Gembala, Tim	
Matusik, Sean	Sean T. Matusik	Knesek, Mark	
Patricks, Bradley		Mourtides, John	
J Bertossi		Pipta, Mike	

1/30/2019 Underground Safety: P Trench Shields

Bartok, Paul		Peterson, Keith	
Cashman, Bart		Pizzuto, Dennis	
Clayton, Dan		Plucinski, Bill	
Geary, Chris		Rastovsky, Kyle	
Higgins, Kevin		Ruzycki, Robert	
Hoekstra, Rich	Rich Hoekstra	Siple, Jeff	
Hurt, Dwight		Slifko, Timothy	
Kokinda, Pete	Peter Kokinda	Teske, Brett	
Krestel, Aaron		Westerlund, Trey	
Lee, Joseph	Joseph Lee	Williams, Lou	
Limoncu, Koray		Winget, Steven	
Luyster, Bruce			
Martinez, Danny		Bell, Brian	
Maslan, Michael		Gembala, Tim	
Matusik, Sean		Knesek, Mark	
Patricks, Bradley		Mourtides, John	
		Pipta, Mike	

Bertossi

1/30/2019 Underground Safety: P Heavy Equipment Operations

Bartok, Paul		Peterson, Keith	
Cashman, Bart		Pizzuto, Dennis	
Clayton, Dan		Plucinski, Bill	
Geary, Chris		Rastovsky, Kyle	
Higgins, Kevin		Ruzycki, Robert	
Hoekstra, Rich	Rich Hoekstra	Siple, Jeff	
Hurt, Dwight		Slifko, Timothy	
Kokinda, Pete		Teske, Brett	
Krestel, Aaron		Westerlund, Trey	
Lee, Joseph		Williams, Lou	
Limoncu, Koray		Winget, Steven	
Luyster, Bruce			
Martinez, Danny		Bell, Brian	
Maslan, Michael		Gembala, Tim	
Matusik, Sean		Knesek, Mark	
Patricks, Bradley		Mourtides, John	
J Bertoni		Pipta, Mike	

1/30/2019

Excavation Best Practices Near Pipelines

Bartok, Paul		Peterson, Keith	
Cashman, Bart		Pizzuto, Dennis	
Clayton, Dan		Plucinski, Bill	
Geary, Chris		Rastovsky, Kyle	
Higgins, Kevin		Ruzycki, Robert	
Hoekstra, Rich		Siple, Jeff	
Hurt, Dwight		Slifko, Timothy	
Kokinda, Pete		Teske, Brett	
Krestel, Aaron		Westerlund, Trey	
Lee, Joseph		Williams, Lou	
Limoncu, Koray		Winget, Steven	
Luyster, Bruce			
Martinez, Danny		Bell, Brian	
Maslan, Michael		Gembala, Tim	
Matusik, Sean		Knesek, Mark	
Patricks, Bradley		Mourtides, John	
		Pipta, Mike	

1/30/2019

Chipper Use and Safety

Bartok, Paul		Peterson, Keith	
Cashman, Bart		Pizzuto, Dennis	
Clayton, Dan		Plucinski, Bill	
Geary, Chris		Rastovsky, Kyle	
Higgins, Kevin		Ruzycki, Robert	
Hoekstra, Rich		Siple, Jeff	
Hurt, Dwight		Slifko, Timothy	
Kokinda, Pete		Teske, Brett	
Krestel, Aaron		Westerlund, Trey	
Lee, Joseph		Williams, Lou	
Limoncu, Koray		Winget, Steven	
Luyster, Bruce			
Martinez, Danny		Bell, Brian	
Maslan, Michael		Gembala, Tim	
Matusik, Sean		Knesek, Mark	
Patricks, Bradley		Mourtides, John	
		Pipta, Mike	

J Bartoni

1/30/2019

Remember Charlie

Bartok, Paul
Cashman, Bart
Clayton, Dan
Geary, Chris
Higgins, Kevin
Hoekstra, Rich
Hurt, Dwight
Kokinda, Pete
Krestel, Aaron
Lee, Joseph
Limoncu, Koray
Luyster, Bruce
Martinez, Danny
Maslan, Michael
Matusik, Sean
Patricks, Bradley
Bertoni

Peterson, Keith
Pizzuto, Dennis
Plucinski, Bill
Rastovsky, Kyle
Ruzycki, Robert
Siple, Jeff
Slifko, Timothy
Teske, Brett
Westerlund, Trey
Williams, Lou
Winget, Steven

Bell, Brian
Gembala, Tim
Knesek, Mark
Mourtides, John
Pipta, Mike

1/30/2019

Loader Backhoe Safety

Bartok, Paul		Peterson, Keith	
Cashman, Bart		Pizzuto, Dennis	
Clayton, Dan		Plucinski, Bill	
Geary, Chris		Rastovsky, Kyle	
Higgins, Kevin		Ruzycki, Robert	
Hoekstra, Rich	Rich Hoekstra	Siple, Jeff	
Hurt, Dwight		Slifko, Timothy	
Kokinda, Pete		Teske, Brett	
Krestel, Aaron		Westerlund, Trey	
Lee, Joseph		Williams, Lou	
Limoncu, Koray		Winget, Steven	
Luyster, Bruce			
Martinez, Danny		Bell, Brian	
Maslan, Michael		Gembala, Tim	
Matusik, Sean		Knesek, Mark	
Patricks, Bradley		Mourtides, John	
		Pipta, Mike	

JBertoni

Public Works 1st Quarter 2019 Safety Training

Date	1/2	1/8	1/15	1/22	1/29	2/5	2/12	2/19	2/26	3/5	3/12	3/19	3/26
Meeting #	1	2	3	4	5	6	7	8	9	10	11	12	13
Bartok	XX	XX	XX	XX	XX	XX	XX						
Bell	XX	XX	XX	XX	XX	XX	XX	BKB					
Cashman			XX	XX	XX	XX		BC					
Clayton	XX	XX	XX	XX	XX	XX	XX	DC					
Geary	XX	XX	XX	XX	XX	XX	XX						
Gembala	XX	XX	XX	XX	XX	XX	XX						
Higgins	XX	XX	XX	XX	XX	XX	XX	KH					
Hoekstra	XX	XX	XX	XX	XX	XX	XX	RH					
Hurt	XX	XX	XX	XX	XX	XX	XX						
Knesek	XX	XX	XX	XX	XX	XX	XX						
Kokinda	XX	XX	XX	XX	XX	XX		PK					
Krestel	XX	XX	XX	XX	XX	XX	XX						
Luyster				XX									
Martinez	XX	XX		XX	XX	XX	XX	DM					
Maslan	XX		XX	XX	XX	XX	XX						
Matusik	XX	XX	XX	XX	XX	XX	XX	SM					
Mouratides	XX	XX		XX	XX	XX	XX						
Patricks	XX	XX	XX	XX	XX	XX	XX						
Peterson	XX	XX				XX	XX	KP					
Pipta		XX	XX		XX								
Pizzuto	XX	XX	XX		XX	XX	XX	DP					
Plucinski	XX	XX			XX	XX	XX	BP					
Rastosky	XX	XX	XX	XX	XX	XX	XX	KR					
Ruzycki	XX	XX	XX	XX	XX	XX		BR					
Siple	XX	XX	XX	XX	XX	XX	XX						
Slifko	XX	XX	XX	XX	XX	XX	XX	TS					
Teske					XX								
Webb													
Winget						XX							
Westerlund	XX	XX	XX	XX	XX	XX	XX						
Williams	XX	XX	XX	XX	XX	XX	XX	LW					

Meeting 1 (1-3-19) Cold Weather Safty
Meeting 2 (1-8-19) Excavations
Meeting 3 (1-15-19) Buckle up
Meeting 4 (1-22-19) Accident Factors
Meeting 5 (1-29-19) Bloodborne Pathogens
Meeting 6 (2-5-19) Drinking & Drugs
Meeting 7 (2-12-19) Eye Protection
Meeting 8 (2-19-19) Protective Footwear
Meeting 9 (2-26-19) Backs

Meeting 10
Meeting 11
Meeting 12
Meeting 13

	1/3/2019	1/8/2019	1/15/2019	1/22/2019	1/29/2019	2/5/2019	2/12/2019
	Meeting 1	2	3	4	5	6	7
Bartok	XX	XX	XX	XX	RB		
Bell	XX	XX	XX	XX	BXB		
Cashman			XX	XX	BC		
Clayton	XX	XX	XX	XX	DC		
Geary	XX	XX	XX	XX			
Gembala	XX	XX	XX	XX			
Higgins	XX	XX	XX	XX			
Hoekstra	XX	XX	XX	XX			
Hurt	XX	XX	XX	XX	DH		
Knesek	XX	XX	XX	XX			
Kokinda	XX	XX	XX	XX	PK		
Krestel	XX	XX	XX	XX	AK		
Luyster				XX			
Martinez	XX	XX		XX			
Maslan	XX		XX	XX			
Matusik	XX	XX	XX	XX	SM		
Mouratides	XX	XX		XX			
Patricks	XX	XX	XX	XX			
Peterson	XX	XX					
Pipta		XX	XX				
Pizzuto	XX	XX	XX				
Plucinski	XX	XX					
Rastosky	XX	XX	XX	XX	JR		
Ruzycki	XX	XX	XX	XX	BR		
Siple	XX	XX	XX	XX			
Slifko	XX	XX	XX	XX	TS		
Teske					BT		
Webb							
Winget							
Westerlund	XX	XX	XX	XX			
Williams	XX	XX	XX	XX			

Meeting 1 (1-3-19) Cold Weather Safty
Meeting 2 (1-8-19) Excavations
Meeting 3 (1-15-19) Buckle up
Meeting 4 (1-22-19) Accident Factors
Meeting 5 (1-29-19) Bloodborne Pathogens
Meeting 6 (2-5-19) Drinking & Drugs
Meeting 7 (2-12-19) Eye Protection
Meeting 8 (2-19-19) Protective Footwear
Meeting 9 (2-26-19) Backs

Joshua Bertossi

	1/3/2019 Meeting 1	1/8/2019 2	1/15/2019 3	1/22/2019 4	1/29/2019 5	2/5/2019 6	2/12/2019 7
Bartok	XX	XX	PB				
Bell	XX	XX	KB				
Cashman			BC				
Clayton	XX	XX	[illegible]				
Geary	XX	XX	[illegible]				
Gembala	XX	XX	[illegible]				
Higgins	XX	XX	[illegible]				
Hoekstra	XX	XX	[illegible]				
Hurt	XX	XX	DH				
Knesek	XX	XX					
Kokinda	XX	XX	PK				
Krestel	XX	XX	AK				
Luyster							
Martinez	XX	XX					
Maslan	XX		[illegible]				
Matusik	XX	XX	SM				
Mouratides	XX	XX					
Patricks	XX	XX	[illegible]				
Peterson	XX	XX	[illegible]				
Pipta		XX	MP				
Pizzuto	XX	XX	DMP				
Plucinski	XX	XX					
Rastosky	XX	XX	JR				
Ruzycki	XX	XX	[illegible]				
Siple	XX	XX	[illegible]				
Slifko	XX	XX	TS				
Teske							
Webb							
Winget							
Westerlund	XX	XX	JW				
Williams	XX	XX	[illegible]				

Meeting 1 (1-3-19) Cold Weather Safty
Meeting 2 (1-8-19) Excavations
Meeting 3 (1-15-19) Buckle up
Meeting 4 (1-22-19) Accident Factors
Meeting 5 (1-29-19) Bloodborne Pathogens
Meeting 6 (2-5-19) Drinking & Drugs
Meeting 7 (2-12-19) Eye Protection
Meeting 8 (2-19-19) Protective Footwear
Meeting 9 (2-26-19) Backs

Josh Bertossi

	1/3/2019 Meeting 1	1/8/2019 2	1/15/2019 3	1/22/2019 4	1/29/2019 5	2/5/2019 6	2/12/2019 7
Bartok	XX						
Bell	XX						
Cashman							
Clayton	XX						
Geary	XX						
Gembala	XX						
Higgins	XX						
Hoekstra	XX						
Hurt	XX						
Knesek	XX						
Kokinda	XX						
Krestel	XX						
Luyster							
Martinez	XX						
Maslan	XX						
Matusik	XX						
Mouratides	XX						
Patricks	XX						
Peterson	XX						
Pipta							
Pizzuto	XX						
Plucinski	XX						
Rastosky	XX						
Ruzycki	XX						
Siple	XX						
Slifko	XX						
Teske							
Webb							
Winget							
Westerlund	XX						
Williams	XX						

Meeting 1 (1-3-19) Cold Weather Safty
Meeting 2 (1-8-19) Excavations
Meeting 3 (1-15-19) Buckle up
Meeting 4 (1-22-19) Accident Factors
Meeting 5 (1-29-19) Bloodborne Pathogens
Meeting 6 (2-5-19) Drinking & Drugs
Meeting 7 (2-12-19) Eye Protection
Meeting 8 (2-19-19) Protective Footwear
Meeting 9 (2-26-19) Backs

J Bertossi

	1/3/2019 Meeting 1	1/8/2019 2	1/15/2019 3	1/22/2019 4	1/29/2019 5	2/5/2019 6	2/12/2019 7
Bartok							
Bell	BKB						
Cashman							
Clayton	DC						
Geary	CG.						
Gembala							
Higgins							
Hoekstra							
Hurt							
Knesek	mK						
Kokinda	PK						
Krestel	AK						
Luyster							
Martinez							
Maslan							
Matusik	SM						
Mouratides							
Patricks							
Peterson							
Pipta							
Pizzuto							
Plucinski							
Rastosky							
Ruzycki							
Siple							
Slifko							
Teske							
Webb							
Winget							
Westerlund							
Williams							

Meeting 1 (1-3-19) Cold Weather Safty
Meeting 2 (1-8-19) Excavations
Meeting 3 (1-15-19) Buckle up
Meeting 4 (1-22-19) Accident Factors
Meeting 5 (1-29-19) Bloodborne Pathogens
Meeting 6 (2-5-19) Drinking & Drugs
Meeting 7 (2-12-19) Eye Protection
Meeting 8 (2-19-19) Protective Footwear
Meeting 9 (2-26-19) Backs

Joshua Bertossi

	1/3/2019 Meeting 1	1/8/2019 2	1/15/2019 3	1/22/2019 4	1/29/2019 5	2/5/2019 6	2/12/2019 7
Bartok	XX	XX	XX	BJB			
Bell	XX	XX	XX	BKB			
Cashman			XX	BTC			
Clayton	XX	XX	XX	DC			
Geary	XX	XX	XX	CG			
Gembala	XX	XX	XX	TG			
Higgins	XX	XX	XX	KH			
Hoekstra	XX	XX	XX	RH			
Hurt	XX	XX	XX	DH			
Knesek	XX	XX	XX				
Kokinda	XX	XX	XX	PK			
Krestel	XX	XX	XX	AK			
Luyster				BL			
Martinez	XX	XX		DM			
Maslan	XX		XX	[illegible]			
Matusik	XX	XX	XX	SM			
Mouratides	XX	XX		JM			
Patricks	XX	XX	XX	DP			
Peterson	XX	XX					
Pipta		XX	XX				
Pizzuto	XX	XX	XX				
Plucinski	XX	XX					
Rastosky	XX	XX	XX	KR			
Ruzycki	XX	XX	XX	BR			
Siple	XX	XX	XX	AS			
Slifko	XX	XX	XX	TS			
Teske							
Webb							
Winget							
Westerlund	XX	XX	XX	TW			
Williams	XX	XX	XX	LW			

Meeting 1 (1-3-19) Cold Weather Safty
Meeting 2 (1-8-19) Excavations
Meeting 3 (1-15-19) Buckle up
Meeting 4 (1-22-19) Accident Factors
Meeting 5 (1-29-19) Bloodborne Pathogens
Meeting 6 (2-5-19) Drinking & Drugs
Meeting 7 (2-12-19) Eye Protection
Meeting 8 (2-19-19) Protective Footwear
Meeting 9 (2-26-19) Backs

Joshua Bertossi

	1/3/2019	1/8/2019	1/15/2019	1/22/2019	1/29/2019	2/5/2019	2/12/2019
	Meeting 1	2	3	4	5	6	7
Bartok	XX	XX	XX	XX	XX	DB	
Bell	XX	XX	XX	XX	XX	BKB	
Cashman			XX	XX	XX	BJC	
Clayton	XX	XX	XX	XX	XX	DC	
Geary	XX	XX	XX	XX	XX	[illegible]	
Gembala	XX	XX	XX	XX	XX	[illegible]	
Higgins	XX	XX	XX	XX	XX	[illegible]	
Hoekstra	XX	XX	XX	XX	XX	RJ	
Hurt	XX	XX	XX	XX	XX	DWH	
Knesek	XX	XX	XX	XX	XX		
Kokinda	XX	XX	XX	XX	XX	PK	
Krestel	XX	XX	XX	XX	XX	AK	
Luyster				XX			
Martinez	XX	XX		XX	XX	[illegible]	
Maslan	XX		XX	XX	XX	[illegible]	
Matusik	XX	XX	XX	XX	XX	SM	
Mouratides	XX	XX		XX	XX	[illegible]	
Patricks	XX	XX	XX	XX	XX	BSP	
Peterson	XX	XX				RP	
Pipta		XX	XX		XX		
Pizzuto	XX	XX	XX		XX	DMP	
Plucinski	XX	XX			XX	BP	
Rastosky	XX	XX	XX	XX	XX	RK	
Ruzycki	XX	XX	XX	XX	XX	BR	
Siple	XX	XX	XX	XX	XX	GTS	
Slifko	XX	XX	XX	XX	XX	[illegible]	
Teske					XX		
Webb							
Winget						[illegible]	
Westerlund	XX	XX	XX	XX	XX	[illegible]	
Williams	XX	XX	XX	XX	XX	[illegible]	

Meeting 1 (1-3-19) Cold Weather Safty
Meeting 2 (1-8-19) Excavations
Meeting 3 (1-15-19) Buckle up
Meeting 4 (1-22-19) Accident Factors
Meeting 5 (1-29-19) Bloodborne Pathogens
Meeting 6 (2-5-19) Drinking & Drugs
Meeting 7 (2-12-19) Eye Protection
Meeting 8 (2-19-19) Protective Footwear
Meeting 9 (2-26-19) Backs

	1/3/2019	1/8/2019	1/15/2019	1/22/2019	1/29/2019	2/5/2019	2/12/2019
	Meeting 1	2	3	4	5	6	7
Bartok	XX	XX	XX	XX	XX	XX	
Bell	XX	XX	XX	XX	XX	XX	BCB
Cashman			XX	XX	XX	XX	
Clayton	XX	XX	XX	XX	XX	XX	DC
Geary	XX	XX	XX	XX	XX	XX	CG
Gembala	XX	XX	XX	XX	XX	XX	
Higgins	XX	XX	XX	XX	XX	XX	KH
Hoekstra	XX	XX	XX	XX	XX	XX	RH
Hurt	XX	XX	XX	XX	XX	XX	DH
Knesek	XX	XX	XX	XX	XX	XX	
Kokinda	XX	XX	XX	XX	XX	XX	
Krestel	XX	XX	XX	XX	XX	XX	AK
Luyster				XX			
Martinez	XX	XX		XX	XX	XX	X
Maslan	XX		XX	XX	XX	XX	
Matusik	XX	XX	XX	XX	XX	XX	SM
Mouratides	XX	XX		XX	XX	XX	
Patricks	XX	XX	XX	XX	XX	XX	BP
Peterson	XX	XX				XX	KP
Pipta		XX	XX		XX		
Pizzuto	XX	XX	XX		XX	XX	
Plucinski	XX	XX			XX	XX	BP
Rastosky	XX	XX	XX	XX	XX	XX	KR
Ruzycki	XX	XX	XX	XX	XX	XX	
Siple	XX	XX	XX	XX	XX	XX	
Slifko	XX	XX	XX	XX	XX	XX	TS
Teske					XX		
Webb							
Winget						XX	
Westerlund	XX	XX	XX	XX	XX	XX	
Williams	XX	XX	XX	XX	XX	XX	LW

Limonia

Meeting 1 (1-3-19) Cold Weather Safty
Meeting 2 (1-8-19) Excavations
Meeting 3 (1-15-19) Buckle up
Meeting 4 (1-22-19) Accident Factors
Meeting 5 (1-29-19) Bloodborne Pathogens
Meeting 6 (2-5-19) Drinking & Drugs
Meeting 7 (2-12-19) Eye Protection
Meeting 8 (2-19-19) Protective Footwear
Meeting 9 (2-26-19) Backs

Public Works 1st Quarter 2019 Safety Training

Date	1/2	1/8	1/15	1/22	1/29	2/5	2/12	2/19	2/26	3/5	3/12	3/19	3/26
Meeting #	1	2	3	4	5	6	7	8	9	10	11	12	13
Bartok	XX	XX	XX	XX	XX	XX	XX	XX	XX				
Bell	XX	XX	XX	XX	XX	XX	XX	XX	XX	BEB			
Cashman			XX	XX	XX	XX		XX	XX				
Clayton	XX	XX	XX	XX	XX	XX	XX	XX	XX	JC			
Geary	XX	XX	XX	XX	XX	XX	XX	XX	XX	CG			
Gembala	XX	XX	XX	XX	XX	XX	XX	XX	XX	JG			
Higgins	XX	XX	XX	XX	XX	XX	XX	XX	XX	KH			
Hoekstra	XX	XX	XX	XX	XX	XX	XX	XX		RH			
Hurt	XX	XX	XX	XX	XX	XX	XX	XX	XX	DH			
Knesek	XX	XX	XX	XX	XX	XX	XX	XX	XX	[illegible]			
Kokinda	XX	XX	XX	XX	XX	XX		XX	XX	PK			
Krestel	XX	XX	XX	XX	XX	XX	XX		XX	AK			
Luyster				XX									
Martinez	XX	XX		XX	XX	XX	XX	XX	XX	NM			
Maslan	XX		XX	XX	XX	XX	XX	XX	XX	[illegible]			
Matusik	XX	XX	XX	XX	XX	XX	XX	XX	XX	SM			
Mouratides	XX	XX		XX	XX	XX	XX	XX	XX	[illegible]			
Patricks	XX	XX	XX	XX	XX	XX	XX	XX		BP			
Peterson	XX	XX				XX	XX	XX	XX	[illegible]			
Pipta		XX	XX		XX				XX	DP			
Pizzuto	XX	XX	XX		XX	XX	XX	XX	XX	AP			
Plucinski	XX	XX			XX	XX	XX	XX	XX	BP			
Rastosky	XX	XX	XX	XX	XX	XX	XX	XX	XX	KR			
Ruzycki	XX	XX	XX	XX	XX	XX		XX	XX	BR			
Siple	XX	XX	XX	XX	XX	XX	XX	XX	XX	[illegible]			
Slifko	XX	XX	XX	XX	XX	XX	XX	XX	XX	TS			
Teske					XX				XX	BT			
Webb													
Winget						XX			XX				
Westerlund	XX	XX	XX	XX	XX	XX	XX	XX	XX	[illegible]			
Williams	XX	XX	XX	XX	XX	XX	XX	XX		LW			

Meeting 1 (1-3-19) Cold Weather Safty
Meeting 2 (1-8-19) Excavations
Meeting 3 (1-15-19) Buckle up
Meeting 4 (1-22-19) Accident Factors
Meeting 5 (1-29-19) Bloodborne Pathogens
Meeting 6 (2-5-19) Drinking & Drugs
Meeting 7 (2-12-19) Eye Protection
Meeting 8 (2-19-19) Protective Footwear
Meeting 9 (2-26-19) Backs

Meeting 10 (3/5/19) Flagging Traffic
Meeting 11 (3/12/19) Check before you move
Meeting 12 (3/19/19) Googles- Gloves
Meeting 13 (3/26/19) Gasoline

Public Works 1st Quarter 2019 Safety Training

Date	1/2	1/8	1/15	1/22	1/29	2/5	2/12	2/19	2/26	3/5	3/12	3/19	3/26
Meeting #	1	2	3	4	5	6	7	8	9	10	11	12	13
Bartok	XX	XX	XX	XX	XX	XX	XX	XX	XX	XX			
Bell	XX	XX	XX	XX	XX	XX	XX	XX	XX	XX			
Cashman			XX	XX	XX	XX		XX	XX		BAC		
Clayton	XX	XX	XX	XX	XX	XX	XX	XX	XX	XX	DC		
Geary	XX	XX	XX	XX	XX	XX	XX	XX	XX	XX	CG		
Gembala	XX	XX	XX	XX	XX	XX	XX	XX	XX	XX	JW		
Higgins	XX	XX	XX	XX	XX	XX	XX	XX	XX	XX			
Hoekstra	XX	XX	XX	XX	XX	XX	XX	XX		XX	RH		
Hurt	XX	XX	XX	XX	XX	XX	XX	XX	XX	XX	DH		
Knesek	XX	XX	XX	XX	XX	XX	XX	XX	XX	XX	mk		
Kokinda	XX	XX	XX	XX	XX	XX		XX	XX		PK		
Krestel	XX	XX	XX	XX	XX	XX	XX		XX	XX	AK		
Luyster				XX									
Martinez	XX	XX		XX	XX	XX	XX	XX	XX	XX			
Maslan	XX		XX	XX	XX	XX	XX	XX	XX	XX	Mike		
Matusik	XX	XX	XX	XX	XX	XX	XX	XX	XX	XX	SM		
Mouratides	XX	XX		XX	XX	XX	XX	XX	XX	XX			
Patricks	XX	XX	XX	XX	XX	XX	XX	XX		XX			
Peterson	XX	XX				XX	XX	XX	XX	XX	LP		
Pipta		XX	XX		XX				XX	XX			
Pizzuto	XX	XX	XX		XX	XX	XX	XX	XX	XX			
Plucinski	XX	XX			XX	XX	XX	XX	XX	XX			
Rastosky	XX	XX	XX	XX	XX	XX	XX	XX	XX	XX	LR		
Ruzycki	XX	XX	XX	XX	XX	XX		XX	XX	XX	BR		
Siple	XX	XX	XX	XX	XX	XX	XX	XX	XX	XX			
Slifko	XX	XX	XX	XX	XX	XX	XX	XX	XX	XX			
Teske					XX				XX	XX			
Webb													
Winget						XX			XX				
Westerlund	XX	XX	XX	XX	XX	XX	XX	XX	XX	XX	JW		
Williams	XX	XX	XX	XX	XX	XX	XX	XX		XX			

Meeting 1 (1-3-19) Cold Weather Safty
Meeting 2 (1-8-19) Excavations
Meeting 3 (1-15-19) Buckle up
Meeting 4 (1-22-19) Accident Factors
Meeting 5 (1-29-19) Bloodborne Pathogens
Meeting 6 (2-5-19) Drinking & Drugs
Meeting 7 (2-12-19) Eye Protection
Meeting 8 (2-19-19) Protective Footwear
Meeting 9 (2-26-19) Backs

Meeting 10 (3/5/19) Flagging Traffic
Meeting 11 (3/12/19) Check before you move
Meeting 12 (3/19/19) Googles- Gloves
Meeting 13 (3/26/19) Gasoline

Public Works 1st Quarter 2019 Safety Training

Date	1/2	1/8	1/15	1/22	1/29	2/5	2/12	2/19	2/26	3/5	3/12	3/19	3/26
Meeting #	1	2	3	4	5	6	7	8	9	10	11	12	13
Bartok	XX	XX	XX	XX	XX	XX	XX	XX	XX	XX			
Bell	XX	XX	XX	XX	XX	XX	XX	XX	XX	XX		BKB	
Cashman			XX	XX	XX	XX		XX	XX		XX		
Clayton	XX	XX	XX	XX	XX	XX	XX	XX	XX	XX	XX	DC	
Dennison											XX		
Geary	XX	XX	XX	XX	XX	XX	XX	XX	XX	XX	XX		
Gembala	XX	XX	XX	XX	XX	XX	XX	XX	XX	XX	XX		
Higgins	XX	XX	XX	XX	XX	XX	XX	XX	XX	XX			
Hoekstra	XX	XX	XX	XX	XX	XX	XX	XX		XX	XX		
Hurt	XX	XX	XX	XX	XX	XX	XX	XX	XX	XX	XX		
Knesek	XX	XX	XX	XX	XX	XX	XX	XX	XX	XX	XX		
Kokinda	XX	XX	XX	XX	XX	XX		XX	XX		XX	PIC	
Krestel	XX	XX	XX	XX	XX	XX	XX		XX	XX	XX		
Martinez	XX	XX		XX	XX	XX	XX	XX	XX	XX			
Maslan	XX		XX	XX	XX	XX	XX	XX	XX	XX	XX		
Matusik	XX	XX	XX	XX	XX	XX	XX	XX	XX	XX	XX	SM	
Mouratides	XX	XX		XX	XX	XX	XX	XX	XX	XX	XX		
Patricks	XX	XX	XX	XX	XX	XX	XX	XX		XX		BP	
Peterson	XX	XX				XX	XX	XX	XX	XX	XX		
Pipta		XX	XX		XX				XX	XX	XX		
Pizzuto	XX	XX	XX		XX	XX	XX	XX	XX	XX	XX		
Plucinski	XX	XX			XX	XX	XX	XX	XX	XX	XX		
Rastosky	XX	XX	XX	XX	XX	XX	XX	XX	XX	XX	XX		
Ruzycki	XX	XX	XX	XX	XX	XX		XX	XX	XX	XX	BR	
Siple	XX	XX	XX	XX	XX	XX	XX	XX	XX	XX	XX		
Slifko	XX	XX	XX	XX	XX	XX	XX	XX	XX	XX			
Teske					XX				XX	XX			
Webb													
Winget						XX			XX		XX		
Westerlund	XX	XX	XX	XX	XX	XX	XX	XX	XX	XX	XX		
Williams	XX	XX	XX	XX	XX	XX	XX	XX		XX	XX		

Meeting 1 (1-3-19) Cold Weather Safty
Meeting 2 (1-8-19) Excavations
Meeting 3 (1-15-19) Buckle up
Meeting 4 (1-22-19) Accident Factors
Meeting 5 (1-29-19) Bloodborne Pathogens
Meeting 6 (2-5-19) Drinking & Drugs
Meeting 7 (2-12-19) Eye Protection
Meeting 8 (2-19-19) Protective Footwear
Meeting 9 (2-26-19) Backs
Meeting 10 (3/5/19) Flagging Traffic
Meeting 11 (3/12/19) Check before you move
Meeting 12 (3/19/19) Googles- Gloves
Meeting 13 (3/26/19) Gasoline

Public Works 1st Quarter 2019 Safety Training

Date	1/2	1/8	1/15	1/22	1/29	2/5	2/12	2/19	2/26	3/5	3/12	3/19	3/26
Meeting #	1	2	3	4	5	6	7	8	9	10	11	12	13
Bartok	XX	XX	XX	XX	XX	XX	XX	XX	XX	XX		XX	
Bell	XX	XX	XX	XX	XX	XX	XX	XX	XX	XX		XX	
Cashman			XX	XX	XX	XX		XX	XX		XX		
Clayton	XX	XX	XX	XX	XX	XX	XX	XX	XX	XX	XX	XX	
Dennison											XX	XX	
Geary	XX	XX	XX	XX	XX	XX	XX	XX	XX	XX	XX	XX	
Gembala	XX	XX	XX	XX	XX	XX	XX	XX	XX	XX	XX	XX	
Higgins	XX	XX	XX	XX	XX	XX	XX	XX	XX	XX		XX	
Hoekstra	XX	XX	XX	XX	XX	XX	XX	XX		XX	XX	XX	
Hurt	XX	XX	XX	XX	XX	XX	XX	XX	XX	XX	XX	XX	
Knesek	XX	XX	XX	XX	XX	XX	XX	XX	XX	XX	XX	XX	
Kokinda	XX	XX	XX	XX	XX	XX		XX	XX		XX	XX	
Krestel	XX	XX	XX	XX	XX	XX	XX		XX	XX	XX	XX	
Martinez	XX	XX		XX	XX	XX	XX	XX	XX	XX			
Maslan	XX		XX	XX	XX	XX	XX	XX	XX	XX	XX	XX	
Matusik	XX	XX	XX	XX	XX	XX	XX	XX	XX	XX	XX	XX	
Mouratides	XX	XX		XX	XX	XX	XX	XX	XX	XX	XX	XX	
Patricks	XX	XX	XX	XX	XX	XX	XX	XX		XX		XX	
Peterson	XX	XX				XX	XX	XX	XX	XX	XX		
Pipta		XX	XX		XX				XX	XX	XX	XX	
Pizzuto	XX	XX	XX		XX	XX	XX	XX	XX	XX	XX	XX	
Plucinski	XX	XX			XX	XX	XX	XX	XX	XX	XX		
Rastosky	XX	XX	XX	XX	XX	XX	XX	XX	XX	XX	XX	XX	
Ruzycki	XX	XX	XX	XX	XX	XX		XX	XX	XX	XX	XX	
Siple	XX	XX	XX	XX	XX	XX	XX	XX	XX	XX	XX		
Slifko	XX	XX	XX	XX	XX	XX	XX	XX	XX	XX		XX	
Teske					XX				XX	XX		XX	
Webb													
Winget						XX			XX		XX		
Westerlund	XX	XX	XX	XX	XX	XX	XX	XX	XX	XX	XX	XX	
Williams	XX	XX	XX	XX	XX	XX	XX	XX		XX	XX	XX	

Meeting 1 (1-3-19) Cold Weather Safty
Meeting 2 (1-8-19) Excavations
Meeting 3 (1-15-19) Buckle up
Meeting 4 (1-22-19) Accident Factors
Meeting 5 (1-29-19) Bloodborne Pathogens
Meeting 6 (2-5-19) Drinking & Drugs
Meeting 7 (2-12-19) Eye Protection
Meeting 8 (2-19-19) Protective Footwear
Meeting 9 (2-26-19) Backs
Meeting 10 (3/5/19) Flagging Traffic
Meeting 11 (3/12/19) Check before you move
Meeting 12 (3/19/19) Googles- Gloves
Meeting 13 (3/26/19) Gasoline

Public Works 2nd Quarter 2019 Safety Training

Date	4/2	4/9	4/16	4/23	4/30	5/7	5/14	5/21	5/28	6/4	6/11	6/18	6/25
Meeting #	14	15	16	17	18	19	20	21	22	23	24	25	26
Bartok													
Bell	BL												
Cashman	BC												
Clayton	DC												
Geary	CG												
Gembala	TG												
Hamilton													
Higgins	KH												
Hoekstra	PH												
Hurt	DH												
Knesek													
Kokinda	PK												
Krestel	AK												
Martinez													
Maslan	Mike												
Matusik	SM												
Mouratides	[illegible]												
Patricks	BP												
Peterson													
Pipta	MP												
Pizzuto													
Plucinski	[illegible]												
Rastosky	[illegible]												
Ruzycki	BR												
Siple	JS												
Slifko	[illegible]												
Teske													
Webb													
Winget	[illegible]												
Westerlund	[illegible]												
Williams	SW												

Meeting 1 (1-3-19) Cold Weather Safty
Meeting 2 (1-8-19) Excavations
Meeting 3 (1-15-19) Buckle up
Meeting 4 (1-22-19) Accident Factors
Meeting 5 (1-29-19) Bloodborne Pathogens
Meeting 6 (2-5-19) Drinking & Drugs
Meeting 7 (2-12-19) Eye Protection
Meeting 8 (2-19-19) Protective Footwear

Meeting 10 (3/5/19) Flagging Traffic
Meeting 11 (3/12/19) Check before you move
Meeting 12 (3/19/19) Googles- gloves
Meeting 13 (3/26/19) Gasoline
Meeting 14 (4/2/19) What can you do to prevent accid
Meeting 15 (4/9/19) Refueling Equipment
Meeting 16 (4/16/19) Ladder Tips
Meeting 17 (4/23/19) Moving Equipment

Public Works 2nd Quarter 2019 Safety Training

Date	4/2	4/9	4/16	4/23	4/30	5/7	5/14	5/21	5/28	6/4	6/11	6/18	6/25
Meeting #	14	15	16	17	18	19	20	21	22	23	24	25	26
Bartok	XX												
Bell	XX	BKB											
Cashman	XX												
Clayton	XX	DC											
Geary	XX	CG											
Gembala	XX												
Hamilton		JH											
Higgins	XX												
Hoekstra	XX												
Hurt	XX												
Knesek	XX												
Kokinda	XX	PK											
Krestel	XX	AK											
Maslan	XX												
Matusik	XX	JM											
Mouratides	XX												
Patricks	XX												
Peterson													
Pipta	XX												
Pizzuto													
Plucinski	XX												
Rastosky	XX												
Ruzycki	XX												
Siple	XX												
Slifko	XX												
Teske													
Winget	XX												
Westerlund	XX												
Williams	XX												

Dennison

Meeting 1 (1-3-19) Cold Weather Safty
Meeting 2 (1-8-19) Excavations
Meeting 3 (1-15-19) Buckle up
Meeting 4 (1-22-19) Accident Factors
Meeting 5 (1-29-19) Bloodborne Pathogens
Meeting 6 (2-5-19) Drinking & Drugs
Meeting 7 (2-12-19) Eye Protection
Meeting 8 (2-19-19) Protective Footwear
Meeting 9 (2-26-19) Backs
Meeting 10 (3/5/19) Flagging Traffic
Meeting 11 (3/12/19) Check before you move
Meeting 12 (3/19/19) Googles- gloves
Meeting 13 (3/26/19) Gasoline
Meeting 14 (4/2/19) What can you do to prevent accid
Meeting 15 (4/9/19) Refueling Equipment
Meeting 16 (4/16/19) Ladder Tips
Meeting 17 (4/23/19) Moving Equipment
Meeting 18 (4/30/19) First day on the job

Public Works 2nd Quarter 2019 Safety Training

Date	4/2	4/9	4/16	4/23	4/30	5/7	5/14	5/21	5/28	6/4	6/11	6/18	6/25
Meeting #	14	15	16	17	18	19	20	21	22	23	24	25	26
Bartok	XX	XX											
Bell	XX	XX	BKB										
Cashman	XX	XX											
Clayton	XX	XX	DC										
Dennison	XX	XX											
Geary	XX	XX											
Gembala	XX												
Hamilton		XX	JH										
Higgins	XX	XX											
Hoekstra	XX	XX	RH										
Hurt	XX		DH										
Knesek	XX	XX											
Kokinda	XX	XX	PK										
Krestel	XX	XX	AK										
Maslan	XX	XX											
Matusik	XX	XX	SM										
Mouratides	XX	XX	JM										
Patricks	XX	XX											
Peterson													
Pipta	XX	XX											
Pizzuto		XX											
Plucinski	XX	XX											
Rastosky	XX	XX	RR										
Ruzycki	XX	XX	BR										
Siple	XX	XX											
Slifko	XX	XX	TS										
Teske		XX											
Winget	XX	XX											
Westerlund	XX	XX											
Williams	XX	XX											

Meeting 1 (1-3-19) Cold Weather Safty
Meeting 2 (1-8-19) Excavations
Meeting 3 (1-15-19) Buckle up
Meeting 4 (1-22-19) Accident Factors
Meeting 5 (1-29-19) Bloodborne Pathogens
Meeting 6 (2-5-19) Drinking & Drugs
Meeting 7 (2-12-19) Eye Protection
Meeting 8 (2-19-19) Protective Footwear
Meeting 9 (2-26-19) Backs
Meeting 10 (3/5/19) Flagging Traffic
Meeting 11 (3/12/19) Check before you move
Meeting 12 (3/19/19) Googles- gloves
Meeting 13 (3/26/19) Gasoline
Meeting 14 (4/2/19) What can you do to prevent accid
Meeting 15 (4/9/19) Refueling Equipment
Meeting 16 (4/16/19) Ladder Tips
Meeting 17 (4/23/19) Moving Equipment
Meeting 18 (4/30/19) First day on the job

Public Works 2nd Quarter 2019 Safety Training

Date	4/2	4/9	4/16	4/23	4/30	5/7	5/14	5/21	5/28	6/4	6/11	6/18	6/25
Meeting #	14	15	16	17	18	19	20	21	22	23	24	25	26
Bartok	XX	XX	XX										
Bell	XX	XX	XX	BKB	BKB								
Cashman	XX	XX		BZC									
Clayton	XX	XX	XX	DC	DC								
Dennison	XX	XX	XX										
Geary	XX	XX											
Gembala	XX												
Hamilton		XX	XX	JH	JH								
Higgins	XX	XX											
Hoekstra	XX	XX	XX	RH	RH								
Hurt	XX		XX		PH								
Knesek	XX	XX	XX	MK									
Kokinda	XX	XX	XX	PK									
Krestel	XX	XX	XX	AK	AK								
Maslan	XX	XX	XX										
Matusik	XX	XX	XX	SM	SM								
Mouratides	XX	XX	XX										
Patricks	XX	XX	XX										
Peterson			XX										
Pipta	XX	XX	XX	MP									
Pizzuto		XX	XX										
Plucinski	XX	XX	XX										
Rastosky	XX	XX	XX	KR	KR								
Ruzycki	XX	XX	XX	BR	BR								
Siple	XX	XX	XX										
Slifko	XX	XX	XX										
Teske		XX	XX										
Winget	XX	XX	XX	SW	SW								
Westerlund	XX	XX	XX										
Williams	XX	XX	XX										

Meeting 1 (1-3-19) Cold Weather Safty
Meeting 2 (1-8-19) Excavations
Meeting 3 (1-15-19) Buckle up
Meeting 4 (1-22-19) Accident Factors
Meeting 5 (1-29-19) Bloodborne Pathogens
Meeting 6 (2-5-19) Drinking & Drugs
Meeting 7 (2-12-19) Eye Protection
Meeting 8 (2-19-19) Protective Footwear
Meeting 9 (2-26-19) Backs
Meeting 10 (3/5/19) Flagging Traffic
Meeting 11 (3/12/19) Check before you move
Meeting 12 (3/19/19) Googles- gloves
Meeting 13 (3/26/19) Gasoline
Meeting 14 (4/2/19) What can you do to prevent accid
Meeting 15 (4/9/19) Refueling Equipment
Meeting 16 (4/16/19) Ladder Tips
Meeting 17 (4/23/19) Moving Equipment
Meeting 18 (4/30/19) First day on the job

ABectorsi

Public Works 2nd Quarter 2019 Safety Training

Date	4/2	4/9	4/16	4/23	4/30	5/7	5/14	5/21	5/28	6/4	6/11	6/18	6/25
Meeting #	14	15	16	17	18	19	20	21	22	23	24	25	26
Arnold					XX								
Bartok	XX	XX	XX	XX	XX								
Bell	XX	XX	XX	XX	XX								
Cashman	XX	XX		XX		B&B.	B&B						
Clayton	XX	XX	XX	XX	XX	DC	DC						
Dennison	XX	XX	XX	XX	XX								
Geary	XX	XX	CG	CG	CG	CG	CG						
Gembala	XX			XX	XX								
Hamilton		XX	XX	XX									
Higgins	XX	XX		XX	XX								
Hoekstra	XX	XX	XX	XX	XX								
Hurt	XX		XX	XX	XX								
Knesek	XX	XX	XX	XX	XX								
Kokinda	XX	XX	XX	XX		PK	PK						
Krestel	XX	XX	XX	XX	XX	AK	AK						
Maslan	XX	XX	XX										
Matusik	XX	XX	XX	XX	XX	JM	JM						
Mouratides	XX	XX	XX	XX									
Patricks	XX	XX	XX										
Peterson			XX	XX	XX								
Pipta	XX	XX	XX	XX									
Pizzuto		XX	XX	XX	XX								
Plucinski	XX	XX	XX	XX	XX								
Rastosky	XX	XX	XX	XX	XX								
Ruzycki	XX	XX	XX	XX	XX								
Siple	XX	XX	XX		XX								
Slifko	XX	XX	XX	XX	XX								
Teske		XX	XX	XX									
Winget	XX	XX	XX	XX	XX	SW	SW						
Westerlund	XX	XX	XX	XX	XX								
Williams	XX	XX	XX	XX	XX	SW	SW						
Kinney							MK						
Joseph							JB						
Kow							KK						

Bartosz Kiolek

Luke Reid

Brian Burbridge

Meeting 1 (1-3-19) Cold Weather Safty
Meeting 2 (1-8-19) Excavations
Meeting 3 (1-15-19) Buckle up
Meeting 4 (1-22-19) Accident Factors
Meeting 5 (1-29-19) Bloodborne Pathogens
Meeting 6 (2-5-19) Drinking & Drugs
Meeting 7 (2-12-19) Eye Protection
Meeting 8 (2-19-19) Protective Footwear
Meeting 9 (2-26-19) Backs
Meeting 10 (3/5/19) Flagging Traffic
Meeting 11 (3/12/19) Check before you move
Meeting 12 (3/19/19) Googles- gloves
Meeting 13 (3/26/19) Gasoline
Meeting 14 (4/2/19) What can you do to prevent accid
Meeting 15 (4/9/19) Refueling Equipment
Meeting 16 (4/16/19) Ladder Tips
Meeting 17 (4/23/19) Moving Equipment
Meeting 18 (4/30/19) First day on the job

Public Works 2nd Quarter 2019 Safety Training

Date	4/2	4/9	4/16	4/23	4/30	5/7	5/14	5/21	5/28	6/4	6/11	6/18	6/25
Meeting #	14	15	16	17	18	19	20	21	22	23	24	25	26
Arnold					XX	CA							
Bartok	XX	XX	XX	XX	XX								
Bell	XX	XX	XX	XX	XX	BKB							
Cashman	XX	XX		XX		BC							
Clayton	XX	XX	XX	XX	XX	DC							
Dennison	XX	XX	XX	XX	XX								
Geary	XX	XX											
Gembala	XX			XX	XX								
Hamilton		XX	XX	XX									
Higgins	XX	XX		XX	XX	KPH							
Hoekstra	XX	XX	XX	XX	XX	RH							
Hurt	XX		XX	XX	XX								
Knesek	XX	XX	XX	XX	XX								
Kokinda	XX	XX	XX	XX									
Krestel	XX	XX	XX	XX	XX	AK							
Maslan	XX	XX	XX										
Matusik	XX	XX	XX	XX	XX	SM							
Mouratides	XX	XX	XX	XX									
Patricks	XX	XX	XX										
Peterson			XX	XX	XX								
Pipta	XX	XX	XX	XX									
Pizzuto		XX	XX	XX	XX								
Plucinski	XX	XX	XX	XX	XX								
Rastosky	XX	XX	XX	XX	XX								
Ruzycki	XX	XX	XX	XX	XX	BR							
Siple	XX	XX	XX		XX	CTS							
Slifko	XX	XX	XX	XX	XX								
Teske		XX	XX	XX									
Winget	XX	XX	XX	XX	XX	SW							
Westerlund	XX	XX	XX	XX	XX								
Williams	XX	XX	XX	XX	XX								

Kinley Mia

NVE

Meeting 19 (5-7-19) Horseplay
Meeting 20 (5-14-19) First day on the job
Meeting 21 (5-21-19) Confined Spaces
Meeting 22 (5-28-19) Spotters
Meeting 23 (6-4-19) Barricades and Warning Devices
Meeting 24 (6-11-19) Fire Extinguishers
Meeting 25 (6-18-19) Off the job safety

Joshua Bartosi
Brian Burbridge
Luke Reid
Joseph Burgess
Michael Wagner
Dylan Klecek

Public Works 2nd Quarter 2019 Safety Training

Date	4/2	4/9	4/16	4/23	4/30	5/7	5/14	5/21	5/28	6/4	6/11	6/18	6/25
Meeting #	14	15	16	17	18	19	20	21	22	23	24	25	26
Arnold					XX	XX	XX	XX	GA				
Bartok	XX	XX	XX	XX	XX	XX	XX	XX					
Bell	XX	XX	XX	XX	XX	XX		XX					
Cashman	XX	XX		XX		XX	XX	XX					
Clayton	XX	XX	XX	XX	XX	XX	XX	XX	DC				
Dennison	XX	XX	XX	XX	XX			XX					
Geary	XX	XX	XX	XX	XX	XX	CG	XX	CG				
Gembala	XX			XX	XX	XX	XX						
Hamilton		XX	XX	XX									
Higgins	XX	XX		XX	XX	XX	XX	XX	EPH				
Hoekstra	XX	XX	XX	XX	XX	XX	XX	XX					
Knesek	XX	XX	XX	XX	XX	XX		XX					
Kokinda	XX	XX	XX	XX		XX	XX		PK				
Krestel	XX	XX	XX	XX	XX	XX	XX	XX	AK				
Maslan	XX	XX	XX										
Matusik	XX	XX	XX	XX	XX	XX	XX	XX					
Mouratides	XX	XX	XX	XX		XX		XX					
Patricks	XX	XX	XX			XX	XX	XX					
Peterson			XX	XX	XX								
Pipta	XX	XX	XX	XX			XX						
Pizzuto		XX	XX	XX	XX	XX	XX	XX					
Plucinski	XX	XX	XX	XX	XX	XX	XX	XX					
Rastosky	XX	XX	XX	XX	XX	XX	XX						
Ruzycki	XX	XX	XX	XX	XX	XX	XX	XX	BR				
Siple	XX	XX	XX		XX	XX	XX	XX					
Slifko	XX	XX	XX	XX	XX			XX					
Teske		XX	XX	XX									
Winget	XX	XX	XX	XX	XX	XX	XX	XX	SW				
Westerlund	XX	XX	XX	XX	XX								
Williams	XX	XX	XX	XX	XX	XX	XX						

Meeting 19 (5-7-19) Horseplay
Meeting 20 (5-14-19) First day on the job
Meeting 21 (5-21-19) Confined Spaces
Meeting 22 (5-28-19) Spotters
Meeting 23 (6-4-19) Barricades and Warning Devices
Meeting 24 (6-11-19) Fire Extinguishers
Meeting 25 (6-18-19) Off the job safety

Luke Reid
Michael Wagner
Joshua Bertossi
Joseph Burgess
Mia Kinney
Gavin Adler
Joseph Lee
Brian Burbridge

Public Works 2nd Quarter 2019 Safety Training

Date	4/2	4/9	4/16	4/23	4/30	5/7	5/14	5/21	5/28	6/4	6/11	6/18	6/25
Meeting #	14	15	16	17	18	19	20	21	22	23	24	25	26
Arnold					XX	XX	XX	XX	XX	GA			
Bartok	XX	XX	XX	XX	XX	XX	XX	XX	XX	BB			
Bell	XX	XX	XX	XX	XX	XX		XX		BxB			
Cashman	XX	XX		XX		XX	XX	XX		BC			
Clayton	XX	XX	XX	XX	XX	XX	XX	XX	XX				
Dennison	XX	XX	XX	XX	XX			XX	XX				
Geary	XX	XX	XX	XX	XX	XX		XX	XX	CG			
Gembala	XX			XX	XX	XX	XX		XX				
Hamilton		XX	XX	XX						JH			
Higgins	XX	XX		XX	XX	XX	XX	XX	XX	KH			
Hoekstra	XX	XX	XX	XX	XX	XX	XX	XX		RH			
Knesek	XX	XX	XX	XX	XX	XX	XX	XX	XX				
Kokinda	XX	XX	XX	XX		XX	XX		XX	PK			
Krestel	XX	XX	XX	XX	XX	XX	XX	XX	XX	AK			
Maslan	XX	XX	XX										
Matusik	XX	XX	XX	XX	XX	XX	XX	XX		SM			
Mouratides	XX	XX	XX	XX		XX		XX	XX				
Patricks	XX	XX	XX			XX	XX	XX	BP	BP			
Peterson			XX	XX	XX					KP			
Pipta	XX	XX	XX	XX			XX			MP			
Pizzuto		XX	XX	XX	XX	XX	XX	XX					
Plucinski	XX	XX	XX	XX	XX	XX	XX	XX	XX				
Rastosky	XX	XX	XX	XX	XX	XX	XX		XX				
Ruzycki	XX	XX	XX	XX	XX	XX	XX	XX	XX				
Siple	XX	XX	XX		XX	XX	XX	XX	XX				
Slifko	XX	XX	XX	XX	XX			XX	XX				
Teske		XX	XX	XX						BT			
Winget	XX	XX	XX	XX	XX	XX	XX	XX	XX	SW			
Westerlund	XX	XX	XX	XX	XX				XX				
Williams	XX	XX	XX	XX	XX	XX	XX		XX	LW			

Meeting 19 (5-7-19) Horseplay
Meeting 20 (5-14-19) First day on the job
Meeting 21 (5-21-19) Confined Spaces
Meeting 22 (5-28-19) Spotters
Meeting 23 (6-4-19) Barricades and Warning Devices
Meeting 24 (6-11-19) Fire Extinguishers
Meeting 25 (6-18-19) Off the job safety

Joshua Bertossi
Luke Reid
Brian Burbridge
Mia Kinney
Gavin Hayes
Dylan Klocek
Michael Wagner

Public Works 2nd Quarter 2019 Safety Training

Date	4/2	4/9	4/16	4/23	4/30	5/7	5/14	5/21	5/28	6/4	6/11	6/18	6/25
Meeting #	14	15	16	17	18	19	20	21	22	23	24	25	26
Arnold					XX	XX	XX	XX	XX	XX			
Bartok	XX	XX	XX	XX	XX	XX	XX	XX	XX	XX			
Bell	XX	XX	XX	XX	XX	XX		XX		XX	BCB		
Cashman	XX	XX		XX		XX	XX	XX		XX	BJC		
Clayton	XX	XX	XX	XX	XX	XX	XX	XX	XX				
Dennison	XX	XX	XX	XX	XX			XX	XX	XX			
Geary	XX	XX	XX	XX	XX	XX		XX	XX	XX			
Gembala	XX			XX	XX	XX	XX		XX				
Hamilton		XX	XX	XX									
Higgins	XX	XX		XX	XX	XX	XX	XX	XX	XX	KPH		
Hoekstra	XX	XX	XX	XX	XX	XX	XX	XX		XX			
Knesek	XX	XX	XX	XX	XX	XX	XX	XX	XX	XX			
Kokinda	XX	XX	XX	XX		XX	XX		XX	XX	PK		
Krestel	XX	XX	XX	XX	XX	XX	XX	XX	XX	XX	AK		
Maslan	XX	XX	XX										
Matusik	XX	XX	XX	XX	XX	XX	XX	XX		XX			
Mouratides	XX	XX	XX	XX		XX		XX	XX	XX			
Patricks	XX	XX	XX			XX	XX	XX		XX			
Peterson			XX	XX	XX					XX			
Pipta	XX	XX	XX	XX			XX			XX			
Pizzuto		XX	XX	XX	XX	XX	XX	XX		XX			
Plucinski	XX	XX	XX	XX	XX	XX	XX	XX	XX	XX			
Rastosky	XX	XX	XX	XX	XX	XX	XX		XX	XX			
Ruzycki	XX	XX	XX	XX	XX	XX	XX	XX	XX	XX			
Siple	XX	XX	XX		XX	XX	XX	XX	XX	XX			
Slifko	XX	XX	XX	XX	XX			XX	XX	XX	TV		
Teske		XX	XX	XX						XX			
Winget	XX	XX	XX	XX	XX	XX	XX	XX	XX	XX	SW		
Westerlund	XX	XX	XX	XX	XX				XX	XX			
Williams	XX	XX	XX	XX	XX	XX	XX		XX	XX	LW		

Mia Kinley
Luke Reid
Joshua Bertossi
Michael Wagner
Gavin Holder

Meeting 19 (5-7-19) Horseplay
Meeting 20 (5-14-19) First day on the job
Meeting 21 (5-21-19) Confined Spaces
Meeting 22 (5-28-19) Spotters
Meeting 23 (6-4-19) Barricades and Warning Devices
Meeting 24 (6-11-19) Fire Extinguishers
Meeting 25 (6-18-19) Off the job safety

Public Works 2nd Quarter 2019 Safety Training

Date	4/2	4/9	4/16	4/23	4/30	5/7	5/14	5/21	5/28	6/4	6/11	6/26	7/2
Meeting #	14	15	16	17	18	19	20	21	22	23	24	25	26
Arnold					XX	XX	XX	XX	XX	XX		CA	
Bartok	XX	XX	XX	XX	XX	XX	XX	XX	XX	XX	XX		
Bell	XX	XX	XX	XX	XX	XX		XX		XX	XX		
Cashman	XX	XX		XX		XX	XX	XX		XX		BTC	
Clayton	XX	XX	XX	XX	XX	XX	XX	XX	XX	DC	XX	DC	
Dennison	XX	XX	XX	XX	XX			XX	XX	XX	XX		
Geary	XX	XX	XX	XX	XX	XX		XX	XX	XX	XX		
Gembala	XX			XX	XX	XX	XX		XX		XX	JG	
Hamilton		XX	XX	XX									
Higgins	XX	XX		XX	XX	XX	XX	XX	XX	XX	XX		
Hoekstra	XX	XX	XX	XX	XX	XX	XX	XX		XX		RH	
Knesek	XX	XX	XX	XX	XX	XX	XX	XX	XX	XX			
Kokinda	XX	XX	XX	XX		XX	XX		XX	XX			
Krestel	XX	XX	XX	XX	XX	XX	XX	XX	XX	XX	XX	AK	
Maslan	XX	XX	XX								XX		
Matusik	XX	XX	XX	XX	XX	XX	XX	XX		XX		SM	
Mouratides	XX	XX	XX	XX		XX		XX	XX	XX	XX		
Patricks	XX	XX	XX			XX	XX	XX		XX	XX		
Peterson			XX	XX	XX					XX	XX		
Pipta	XX	XX	XX	XX			XX			XX			
Pizzuto		XX	XX	XX	XX	XX	XX	XX		XX			
Plucinski	XX	XX	XX	XX	XX	XX	XX	XX	XX	XX	XX		
Rastosky	XX	XX	XX	XX	XX	XX	XX		XX	XX			
Ruzycki	XX	XX	XX	XX	XX	XX	XX	XX	XX	XX		BR	
Siple	XX	XX	XX		XX	XX	XX	XX	XX	XX			
Slifko	XX	XX	XX	XX	XX			XX	XX	XX	XX	TS	
Teske		XX	XX	XX						XX			
Winget	XX	XX	XX	XX	XX	XX	XX	XX	XX	XX	XX		
Westerlund	XX	XX	XX	XX	XX				XX	XX			
Williams	XX	XX	XX	XX	XX	XX	XX		XX	XX	XX		

Meeting 19 (5-7-19) Horseplay
Meeting 20 (5-14-19) First day on the job
Meeting 21 (5-21-19) Confined Spaces
Meeting 22 (5-28-19) Spotters
Meeting 23 (6-4-19) Barricades and Warning Devices
Meeting 24 (6-11-19) Fire Extinguishers
Meeting 25 (6-26-19) Off the Job Safty

Joshua Bertossi
Mica Kinley
Gavin Hooper
Joseph Burgess
Michael Wagner
Joseph Lee
Rory Johnson
Brian Bitteridge
Luke Reid

Public Works 2nd Quarter 2019 Safety Training

Date	4/2	4/9	4/16	4/23	4/30	5/7	5/14	5/21	5/28	6/4	6/11	6/26	7/9
Meeting #	14	15	16	17	18	19	20	21	22	23	24	25	26
Arnold					XX	XX	XX	XX	XX	XX		XX	GA
Bartok	XX	XX	XX	XX	XX	XX	XX	XX	XX	XX	XX	XX	
Bell	XX	XX	XX	XX	XX	XX		XX		XX	XX		BKB
Cashman	XX	XX		XX		XX	XX	XX		XX		XX	
Clayton	XX	XX	XX	XX	XX	XX	XX	XX	XX		XX	XX	DC
Dennison	XX	XX	XX	XX	XX			XX	XX	XX	XX	XX	
Geary	XX	XX	XX	XX	XX	XX		XX	XX	XX	XX	XX	
Gembala	XX			XX	XX	XX	XX		XX		XX	XX	
Hamilton		XX	XX	XX									
Higgins	XX	XX		XX	XX	XX	XX	XX	XX	XX	XX	XX	KH
Hoekstra	XX	XX	XX	XX	XX	XX	XX	XX		XX		XX	RH
Knesek	XX	XX	XX	XX	XX	XX	XX	XX	XX	XX			mK
Kokinda	XX	XX	XX	XX		XX	XX		XX	XX		XX	PK
Krestel	XX	XX	XX	XX	XX	XX	XX	XX	XX	XX	XX	XX	
Maslan	XX	XX	XX								XX		
Matusik	XX	XX	XX	XX	XX	XX	XX	XX		XX		XX	
Mouratides	XX	XX	XX	XX		XX		XX	XX	XX	XX	XX	
Patricks	XX	XX	XX			XX	XX	XX		XX	XX	XX	
Peterson			XX	XX	XX					XX	XX		
Pipta	XX	XX	XX	XX			XX			XX		XX	
Pizzuto		XX	XX	XX	XX	XX	XX	XX		XX		XX	
Plucinski	XX	XX	XX	XX	XX	XX	XX	XX	XX	XX	XX	XX	
Rastosky	XX	XX	XX	XX	XX	XX	XX		XX	XX		XX	KR
Ruzycki	XX	XX	XX	XX	XX	XX	XX	XX	XX	XX		XX	BR
Siple	XX	XX	XX		XX	XX	XX	XX	XX	XX			
Slifko	XX	XX	XX	XX	XX			XX	XX	XX	XX	XX	TS
Teske		XX	XX	XX						XX			
Winget	XX	XX	XX	XX	XX	XX	XX	XX	XX	XX	XX	XX	
Westerlund	XX	XX	XX	XX	XX				XX	XX		XX	
Williams	XX	XX	XX	XX	XX	XX	XX		XX	XX	XX	XX	

Meeting 19 (5-7-19) Horseplay
Meeting 20 (5-14-19) First day on the job
Meeting 21 (5-21-19) Confined Spaces
Meeting 22 (5-28-19) Spotters
Meeting 23 (6-4-19) Barricades and Warning Devices
Meeting 24 (6-11-19) Fire Extinguishers
Meeting 25 (6-26-19) Off the Job Safty
Meeting 26 (7-9-19) Golden rule of confined space entry

Joshua Bertorsi
Gavin Holder
Luke Reid
Brian Burcridge
Joseph Burgess
Michael Wagner
Mia Kinley

Public Works 2nd Quarter 2019 Safety Training

Date	7/16	7/23	7/30	8/6	8/13	8/20	8/27	9/3	9/10	9/17	9/24	10/1	10/8
Meeting #	27	28	29	30	31	32	33	34	35	36	37	38	39
Arnold	GA												
Bartok													
Bell	BB												
Cashman													
Clayton	DC												
Dennison													
Geary	G												
Gembala													
Hamilton													
Higgins													
Hoekstra													
Knesek													
Kokinda	PK												
Krestel	AK												
Maslan													
Matusik	SM												
Mouratides													
Patricks													
Peterson													
Pipta													
Pizzuto													
Plucinski													
Rastosky													
Ruzycki													
Siple													
Slifko													
Teske													
Winget													
Westerlund													
Williams													

Meeting 27 (7/16/19) Chain saw safety
Metting 28 (7/23/19) Cell phone use
Meeting 29 (7/30/19) Awareness on the job
Meeting 30 (8/6/19) Common Sense
Meeting 31 (8/13/19) Bad Habits
Meeting 32 (8/20/19) All in the fun
Meeting 33 (8/27/19) Who is responsible for safety
Meeting 34 (9/3/19) Controlling Stress

Brian Burcridge
Michael Wagner
joseph Burgess
Mia Kinney
Dylan
Gavin Hooper
Joseph Lee

Public Works 2nd Quarter 2019 Safety Training

Date	7/16	7/23	7/30	8/6	8/13	8/20	8/27	9/3	9/10	9/17	9/24	10/1	10/8
Meeting #	27	28	29	30	31	32	33	34	35	36	37	38	39
Arnold	XX												
Bartok	XX												
Bell	XX	BJB											
Cashman		BRC											
Clayton	XX												
Dennison	XX												
Geary	XX	CG											
Gembala													
Hamilton													
Higgins	XX	KRH											
Hoekstra	XX	RH											
Knesek	XX	mk											
Kokinda	XX	PK											
Krestel	XX	DK											
Maslan													
Matusik	XX	JM											
Mouratides													
Patricks	XX												
Peterson	XX	RP											
Pipta	XX												
Pizzuto	XX	NMP											
Plucinski													
Rastosky	XX												
Ruzycki													
Siple													
Slifko	XX												
Teske		BT											
Winget	XX	SW											
Westerlund	XX												
Williams	XX												

Meeting 27 (7/16/19) Chain saw safety
Metting 28 (7/23/19) Cell phone use
Meeting 29 (7/30/19) Awareness on the job
Meeting 30 (8/6/19) Common Sense
Meeting 31 (8/13/19) Bad Habits
Meeting 32 (8/20/19) All in the fun
Meeting 33 (8/27/19) Who is responsible for safety
Meeting 34 (9/3/19) Controlling Stress

Luke Reid
Gavin Holder
Dylan Klock
Mia Kinley
Michael Wagner
Brian Rutherdge
Joseph Burgess

Public Works 2nd Quarter 2019 Safety Training

Date	7/16	7/23	7/30	8/6	8/13	8/20	8/27	9/3	9/10	9/17	9/24	10/1	10/8
Meeting #	27	28	29	30	31	32	33	34	35	36	37	38	39
Arnold	XX												
Bartok	XX												
Bell	XX	XX	BKB										
Cashman		XX											
Clayton	XX	XX	DC										
Dennison	XX												
Geary	XX	XX											
Gembala													
Hamilton													
Higgins	XX	XX											
Hoekstra	XX	XX											
Knesek	XX	XX	KK										
Kokinda	XX	XX	PK										
Krestel	XX	XX	AK										
Maslan													
Matusik	XX	XX											
Mouratides		XX											
Patricks	XX	XX											
Peterson	XX	XX											
Pipta	XX	XX											
Pizzuto	XX	XX											
Plucinski		XX											
Rastosky	XX												
Ruzycki			BR										
Siple		XX											
Slifko	XX	XX											
Teske		XX											
Winget	XX	XX	SW										
Westerlund	XX	XX											
Williams	XX	XX											

Meeting 27 (7/16/19) Chain saw safety
Metting 28 (7/23/19) Cell phone use
Meeting 29 (7/30/19) Awareness on the job
Meeting 30 (8/6/19) Common Sense
Meeting 31 (8/13/19) Bad Habits
Meeting 32 (8/20/19) All in the fun
Meeting 33 (8/27/19) Who is responsible for safety
Meeting 34 (9/3/19) Controlling Stress

Joshua Bortossi
Brian Bowerridge
Joseph Burgess
Mia Kinney

Public Works 2nd Quarter 2019 Safety Training

Date	7/16	7/23	7/30	8/6	8/13	8/20	8/27	9/3	9/10	9/17	9/24	10/1	10/8
Meeting #	27	28	29	30	31	32	33	34	35	36	37	38	39
Arnold	XX			GA									
Bartok	XX												
Bell	XX	XX	XX	BB									
Cashman		XX											
Clayton	XX	XX	XX	DC									
Dennison	XX		XX	[illegible]									
Geary	XX	XX	XX	CG									
Gembala			XX	TG									
Hamilton													
Higgins	XX	XX	XX										
Hoekstra	XX	XX		RH									
Knesek	XX	XX	XX	mk									
Kokinda	XX	XX	XX	PK									
Krestel	XX	XX	XX	AK									
Maslan													
Matusik	XX	XX	XX	SM									
Mouratides		XX	XX	[illegible]									
Patricks	XX	XX	XX	[illegible]									
Peterson	XX	XX	XX	RP									
Pipta	XX	XX	XX										
Pizzuto	XX	XX	XX										
Plucinski		XX	XX										
Rastosky	XX			RR									
Ruzycki			XX										
Siple		XX		[illegible]									
Slifko	XX	XX	XX	[illegible]									
Teske		XX											
Winget	XX	XX	XX	SW									
Westerlund	XX	XX	XX	[illegible]									
Williams	XX	XX	XX										

Meeting 27 (7/16/19) Chain saw safety — Luke Reid
Metting 28 (7/23/19) Cell phone use — Dylan Maul
Meeting 29 (7/30/19) Awareness on the job — Gavin Holzer
Meeting 30 (8/6/19) Common Sense — Mia Kenny
Meeting 31 (8/13/19) Bad Habits — Joseph Burgess
Meeting 32 (8/20/19) All in the fun — Brian Burridge
Meeting 33 (8/27/19) Who is responsible for safety
Meeting 34 (9/3/19) Controlling Stress

Public Works 2nd Quarter 2019 Safety Training

Date	7/16	7/23	7/30	8/6	8/13	8/20	8/27	9/3	9/10	9/17	9/24	10/1	10/8
Meeting #	27	28	29	30	31	32	33	34	35	36	37	38	39
Arnold	XX			XX	GA								
Bartok	XX												
Bell	XX	XX	XX	XX									
Cashman		XX											
Clayton	XX	XX	XX	XX	DC								
Dennison	XX		XX	XX									
Geary	XX	XX	XX	XX									
Gembala			XX	XX	TG								
Hamilton													
Higgins	XX	XX	XX										
Hoekstra	XX	XX		XX									
Knesek	XX	XX	XX	XX									
Kokinda	XX	XX	XX	XX	PK								
Krestel	XX	XX	XX	XX	AK								
Maslan													
Matusik	XX	XX	XX	XX									
Mouratides		XX	XX	XX									
Patricks	XX	XX	XX	XX									
Peterson	XX	XX	XX	XX									
Pipta	XX	XX	XX		MP								
Pizzuto	XX	XX	XX										
Plucinski		XX	XX	XX									
Rastosky	XX			XX									
Ruzycki			XX										
Siple		XX		XX									
Slifko	XX	XX	XX	XX									
Teske		XX											
Winget	XX	XX	XX	XX	SW								
Westerlund	XX	XX	XX	XX									
Williams	XX	XX	XX										

Meeting 27 (7/16/19) Chain saw safety
Metting 28 (7/23/19) Cell phone use
Meeting 29 (7/30/19) Awareness on the job
Meeting 30 (8/6/19) Common Sense
Meeting 31 (8/13/19) Bad Habits
Meeting 32 (8/20/19) All in the fun
Meeting 33 (8/27/19) Who is responsible for safety
Meeting 34 (9/3/19) Controlling Stress

Luke Reid
joseph Burges
Dylan Mark
GAVIN HOOPER

Public Works 2nd Quarter 2019 Safety Training

Date	7/16	7/23	7/30	8/6	8/13	8/20	8/27	9/3	9/10	9/17	9/24	10/1	10/8
Meeting #	27	28	29	30	31	32	33	34	35	36	37	38	39
Arnold	XX			XX	XX	GA							
Bartok	XX				XX								
Bell	XX	XX	XX	XX		BB							
Cashman		XX				BC							
Clayton	XX	XX	XX	XX	XX	DC							
Dennison	XX		XX	XX	XX								
Geary	XX	XX	XX	XX	XX	CG							
Gembala			XX	XX	XX	TG							
Hamilton													
Higgins	XX	XX	XX		XX	RHA							
Hoekstra	XX	XX		XX									
Knesek	XX	XX	XX	XX	XX								
Kokinda	XX	XX	XX	XX	XX								
Krestel	XX	XX	XX	XX	XX	AK							
Maslan													
Matusik	XX	XX	XX	XX		BM							
Mouratides		XX	XX	XX									
Patricks	XX	XX	XX	XX	XX								
Peterson	XX	XX	XX	XX	XX	KP							
Pipta	XX	XX	XX		XX								
Pizzuto	XX	XX	XX		XX	DP							
Plucinski		XX	XX	XX	XX	ZP							
Rastosky	XX			XX	XX	LR							
Ruzycki			XX		XX								
Siple		XX		XX	XX								
Slifko	XX	XX	XX	XX	XX	TS							
Teske		XX											
Winget	XX	XX	XX	XX	XX	SW							
Westerlund	XX	XX	XX	XX	XX								
Williams	XX	XX	XX		XX	SW							

Luke Reid
Dylan Hoge
HL

Meeting 27 (7/16/19) Chain saw safety
Metting 28 (7/23/19) Cell phone use
Meeting 29 (7/30/19) Awareness on the job
Meeting 30 (8/6/19) Common Sense
Meeting 31 (8/13/19) Bad Habits
Meeting 32 (8/20/19) All in the fun
Meeting 33 (8/27/19) Who is responsible for safety
Meeting 34 (9/3/19) Controlling Stress

Public Works 2nd Quarter 2019 Safety Training

Date	7/16	7/23	7/30	8/6	8/13	8/20	8/27	9/3	9/10	9/17	9/24	10/1	10/8
Meeting #	27	28	29	30	31	32	33	34	35	36	37	38	39
Arnold	XX			XX	XX	XX	GA						
Bartok	XX				XX	XX							
Bell	XX	XX	XX	XX		XX							
Cashman		XX				XX							
Clayton	XX	XX	XX	XX	XX	XX							
Dennison	XX		XX	XX	XX	XX							
Geary	XX	XX	XX	XX	XX	XX							
Gembala			XX	XX	XX	XX							
Hamilton													
Higgins	XX	XX	XX		XX	XX							
Hoekstra	XX	XX		XX									
Knesek	XX	XX	XX	XX	XX	XX							
Kokinda	XX	XX	XX	XX	XX		PK						
Krestel	XX	XX	XX	XX	XX	XX	AK						
Maslan													
Matusik	XX	XX	XX	XX		XX							
Mouratides		XX	XX	XX		XX							
Patricks	XX	XX	XX	XX	XX	XX							
Peterson	XX	XX	XX	XX	XX	XX							
Pipta	XX	XX	XX		XX	XX							
Pizzuto	XX	XX	XX		XX	XX							
Plucinski		XX	XX	XX	XX	XX							
Rastosky	XX			XX	XX	XX							
Ruzycki			XX		XX	XX							
Siple		XX		XX	XX	XX							
Slifko	XX	XX	XX	XX	XX	XX							
Teske		XX											
Winget	XX	XX	XX	XX	XX	XX							
Westerlund	XX	XX	XX	XX	XX	XX							
Williams	XX	XX	XX		XX	XX							

Luke Reidy

Meeting 27 (7/16/19) Chain saw safety
Metting 28 (7/23/19) Cell phone use
Meeting 29 (7/30/19) Awareness on the job
Meeting 30 (8/6/19) Common Sense
Meeting 31 (8/13/19) Bad Habits
Meeting 32 (8/20/19) All in the fun
Meeting 33 (8/27/19) Who is responsible for safety
Meeting 34 (9/3/19) Controlling Stress

Public Works 2nd Quarter 2019 Safety Training

Date	7/16	7/23	7/30	8/6	8/13	8/20	8/27	9/3	9/10	9/17	9/24	10/1	10/8
Meeting #	27	28	29	30	31	32	33	34	35	36	37	38	39
Arnold	XX			XX	XX	XX	XX	GA					
Bartok	XX				XX	XX	XX						
Bell	XX	XX	XX	XX		XX	XX	BCB					
Cashman		XX				XX							
Clayton	XX	XX	XX	XX	XX	XX	XX	DC					
Dennison	XX		XX	XX	XX	XX	XX						
Geary	XX	XX	XX	XX	XX	XX	XX	CG					
Gembala			XX	XX	XX	XX	XX						
Hamilton													
Higgins	XX	XX	XX		XX	XX	XX	KFA					
Hoekstra	XX	XX		XX									
Knesek	XX	XX	XX	XX	XX	XX	XX						
Kokinda	XX	XX	XX	XX	XX		XX	PK					
Krestel	XX	XX	XX	XX	XX	XX	XX	AK					
Maslan													
Matusik	XX	XX	XX	XX		XX	XX	SM					
Mouratides		XX	XX	XX		XX	XX						
Patricks	XX	XX	XX	XX	XX	XX	XX	PJP					
Peterson	XX	XX	XX	XX	XX	XX	XX						
Pipta	XX	XX	XX		XX	XX	XX						
Pizzuto	XX	XX	XX		XX	XX	XX						
Plucinski		XX	XX	XX	XX	XX	XX						
Rastosky	XX			XX	XX	XX	XX	KR					
Ruzycki			XX		XX	XX	XX						
Siple		XX		XX	XX	XX							
Slifko	XX	XX	XX	XX	XX	XX	XX						
Teske		XX											
Winget	XX	XX	XX	XX	XX	XX	XX	SW					
Westerlund	XX	XX	XX	XX	XX	XX	XX						
Williams	XX	XX	XX		XX	XX	XX						

Meeting 27 (7/16/19) Chain saw safety
Metting 28 (7/23/19) Cell phone use
Meeting 29 (7/30/19) Awareness on the job
Meeting 30 (8/6/19) Common Sense
Meeting 31 (8/13/19) Bad Habits
Meeting 32 (8/20/19) All in the fun
Meeting 33 (8/27/19) Who is responsible for safety
Meeting 34 (9/3/19) Controlling Stress

Public Works 2nd Quarter 2019 Safety Training

Date	7/16	7/23	7/30	8/6	8/13	8/20	8/27	9/3	9/10	9/17	9/24	10/1	10/8
Meeting #	27	28	29	30	31	32	33	34	35	36	37	38	39
Arnold	XX			XX	XX	XX	XX	XX	GA				
Bartok	XX				XX	XX	XX	XX					
Bell	XX	XX	XX	XX		XX	XX	XX	BKB				
Cashman		XX				XX							
Clayton	XX	XX	XX	XX	XX	XX	XX	XX	DC				
Dennison	XX		XX	XX	XX	XX	XX						
Geary	XX	XX	XX	XX	XX	XX	XX	XX	CG				
Gembala			XX	XX	XX	XX	XX						
Hamilton													
Higgins	XX	XX	XX		XX	XX	XX	XX					
Hoekstra	XX	XX		XX									
Knesek	XX	XX	XX	XX	XX	XX	XX	XX					
Kokinda	XX	XX	XX	XX	XX		XX	XX	PIC				
Krestel	XX	XX	XX	XX	XX	XX	XX	XX	AK				
Maslan													
Matusik	XX	XX	XX	XX		XX	XX	XX	SM				
Mouratides		XX	XX	XX		XX	XX						
Patricks	XX	XX	XX	XX	XX	XX	XX	XX					
Peterson	XX	XX	XX	XX	XX	XX	XX	XX	AP				
Pipta	XX	XX	XX		XX	XX	XX	XX					
Pizzuto	XX	XX	XX		XX	XX	XX	XX					
Plucinski		XX	XX	XX	XX	XX	XX	XX					
Rastosky	XX			XX	XX	XX	XX	XX	KR				
Ruzycki			XX		XX	XX	XX						
Siple		XX		XX	XX	XX							
Slifko	XX	XX	XX	XX	XX	XX	XX	XX					
Teske		XX											
Winget	XX	XX	XX	XX	XX	XX	XX	XX	SW				
Westerlund	XX	XX	XX	XX	XX	XX	XX	XX					
Williams	XX	XX	XX		XX	XX	XX	XX					

Meeting 27 (7/16/19) Chain saw safety
Metting 28 (7/23/19) Cell phone use
Meeting 29 (7/30/19) Awareness on the job
Meeting 30 (8/6/19) Common Sense
Meeting 31 (8/13/19) Bad Habits
Meeting 32 (8/20/19) All in the fun
Meeting 33 (8/27/19) Who is responsible for safety
Meeting 34 (9/3/19) Controlling Stress
Meeting 35 (9/10/19) 9/11

Gavin Holder
Luke Reid
Dylan Moser

Public Works 2nd Quarter 2019 Safety Training

Date	7/16	7/23	7/30	8/6	8/13	8/20	8/27	9/3	9/10	9/17	9/24	10/1	10/8
Meeting #	27	28	29	30	31	32	33	34	35	36	37	38	39
Arnold	XX			XX	XX	XX	XX	XX	XX	GA			
Bartok	XX				XX	XX	XX	XX	XX				
Bell	XX	XX	XX	XX		XX	XX	XX	XX	BEB			
Cashman		XX				XX				BJC			
Clayton	XX	XX	XX	XX	XX	XX	XX	XX	XX	DC			
Dennison	XX		XX	XX	XX	XX	XX		XX	JD			
Geary	XX	XX	XX	XX	XX	XX	XX	XX	XX				
Gembala			XX	XX	XX	XX	XX		XX				
Hamilton													
Higgins	XX	XX	XX		XX	XX	XX	XX	KRH	KRH			
Hoekstra	XX	XX		XX									
Knesek	XX	XX	XX	XX	XX	XX	XX	XX	XX				
Kokinda	XX	XX	XX	XX	XX		XX	XX	XX	PK			
Krestel	XX	XX	XX	XX	XX	XX	XX	XX	XX	AK			
Maslan													
Matusik	XX	XX	XX	XX		XX	XX	XX	XX	SM			
Mouratides		XX	XX	XX		XX	XX		XX				
Patricks	XX	XX	XX	XX	XX	XX	XX	XX	XX	BP			
Peterson	XX	XX	XX	XX	XX	XX	XX	XX	XX	KP			
Pipta	XX	XX	XX		XX	XX	XX	XX	XX				
Pizzuto	XX	XX	XX		XX	XX	XX	XX	XX				
Plucinski		XX	XX	XX	XX	XX	XX	XX	XX				
Rastosky	XX			XX	XX	XX	XX	XX	XX				
Ruzycki			XX		XX	XX	XX		XX				
Siple		XX		XX	XX	XX			XX				
Slifko	XX	XX	XX	XX	XX	XX	XX	XX	XX	V.J.			
Teske		XX											
Winget	XX	XX	XX	XX	XX	XX	XX	XX	XX				
Westerlund	XX	XX	XX	XX	XX	XX	XX	XX	XX				
Williams	XX	XX	XX		XX	XX	XX	XX	XX				

Luke Reid

Meeting 27 (7/16/19) Chain saw safety
Metting 28 (7/23/19) Cell phone use
Meeting 29 (7/30/19) Awareness on the job
Meeting 30 (8/6/19) Common Sense
Meeting 31 (8/13/19) Bad Habits
Meeting 32 (8/20/19) All in the fun
Meeting 33 (8/27/19) Who is responsible for safety
Meeting 34 (9/3/19) Controlling Stress
Meeting 35 (9/10/19) 9/11
Meeting 36 (9/17/19) Auditing Ourselves

Public Works 2nd Quarter 2019 Safety Training

Date	7/16	7/23	7/30	8/6	8/13	8/20	8/27	9/3	9/10	9/17	9/24	10/1	10/8
Meeting #	27	28	29	30	31	32	33	34	35	36	37	38	39
Arnold	XX			XX	XX	XX	XX	XX	XX	XX	GA		
Bartok	XX				XX	XX	XX	XX	XX	XX			
Bell	XX	XX	XX	XX		XX	XX	XX	XX	XX			
Cashman		XX				XX				XX			
Clayton	XX	XX	XX	XX	XX	XX	XX	XX	XX	XX	DC		
Dennison	XX		XX	XX	XX	XX	XX		XX	XX			
Geary	XX	XX	XX	XX	XX	XX	XX	XX	XX	XX	CG		
Gembala			XX	XX	XX	XX	XX		XX				
Hamilton													
Higgins	XX	XX	XX		XX	XX	XX	XX		XX	XX		
Hoekstra	XX	XX		XX									
Knesek	XX	XX	XX	XX	XX	XX	XX	XX	XX	XX			
Kokinda	XX	XX	XX	XX	XX		XX	XX	XX	XX	DK		
Krestel	XX	XX	XX	XX	XX	XX	XX	XX	XX	XX	AK		
Maslan													
Matusik	XX	XX	XX	XX		XX	XX	XX	XX	XX			
Mouratides		XX	XX	XX		XX	XX		XX	XX			
Patricks	XX	XX	XX	XX	XX	XX	XX	XX	XX	XX			
Peterson	XX	XX	XX	XX	XX	XX	XX	XX	XX	XX	KP		
Pipta	XX	XX	XX		XX	XX	XX	XX	XX				
Pizzuto	XX	XX	XX		XX	XX	XX	XX	XX	XX			
Plucinski		XX	XX	XX	XX	XX	XX	XX	XX	XX			
Rastosky	XX			XX	XX	XX	XX	XX	XX	XX			
Ruzycki			XX		XX	XX	XX		XX				
Siple		XX		XX	XX	XX			XX	XX			
Slifko	XX	XX	XX	XX	XX	XX	XX	XX	XX	XX	TS		
Teske		XX											
Winget	XX	XX	XX	XX	XX	XX	XX	XX	XX		SW		
Westerlund	XX	XX	XX	XX	XX	XX	XX	XX	XX	XX			
Williams	XX	XX	XX		XX	XX	XX	XX	XX	XX			

* I WAS PRESENT VIA KRLA

Meeting 27 (7/16/19) Chain saw safety
Metting 28 (7/23/19) Cell phone use
Meeting 29 (7/30/19) Awareness on the job
Meeting 30 (8/6/19) Common Sense
Meeting 31 (8/13/19) Bad Habits
Meeting 32 (8/20/19) All in the fun
Meeting 33 (8/27/19) Who is responsible for safety
Meeting 34 (9/3/19) Controlling Stress
Meeting 35 (9/10/19) 9/11
Meeting 36 (9/17/19) Auditing Ourselves
Meeting 37 (9/24/19) Getting plenty of sleep
Meeting 38 (10/1/19) Is there ever an excuse not to work safely?
Meeting 39 (10/8/19) Emergency Prepareness

Luke Reid

Dylan Klose

Public Works 2nd Quarter 2019 Safety Training

Date	7/16	7/23	7/30	8/6	8/13	8/20	8/27	9/3	9/10	9/17	9/24	10/1	10/8
Meeting #	27	28	29	30	31	32	33	34	35	36	37	38	39
Arnold	XX			XX	XX	XX	XX	XX	XX	XX	XX	GA	
Bartok	XX				XX	XX	XX	XX	XX	XX	XX		
Bell	XX	XX	XX	XX		XX	XX	XX	XX	XX		BKB	
Cashman		XX				XX				XX		BTC	
Clayton	XX	XX	XX	XX	XX	XX	XX	XX	XX	XX	XX	DC	
Dennison	XX		XX	XX	XX	XX	XX		XX	XX	XX		
Geary	XX	XX	XX	XX	XX	XX	XX	XX	XX	XX	XX		
Gembala			XX	XX	XX	XX	XX		XX		XX		
Hamilton													
Higgins	XX	XX	XX		XX	XX	XX	XX		XX	XX		
Hoekstra	XX	XX		XX									
Knesek	XX	XX	XX	XX	XX	XX	XX	XX	XX	XX	XX		
Kokinda	XX	XX	XX	XX	XX		XX	XX	XX	XX	XX	PK	
Krestel	XX	XX	XX	XX	XX	XX	XX	XX	XX	XX	XX	AK	
Maslan											XX		
Matusik	XX	XX	XX	XX		XX	XX	XX	XX	XX		SM	
Mouratides		XX	XX	XX		XX	XX		XX	XX			
Patricks	XX	XX	XX	XX	XX	XX	XX	XX	XX	XX	XX		
Peterson	XX	XX	XX	XX	XX	XX	XX	XX	XX	XX	XX	PP	
Pipta	XX	XX	XX		XX	XX	XX	XX	XX				
Pizzuto	XX	XX	XX		XX	XX	XX	XX	XX	XX	XX		
Plucinski		XX	XX	XX	XX	XX	XX	XX	XX	XX	XX		
Rastosky	XX			XX	XX	XX	XX	XX	XX	XX	XX	RR	
Ruzycki			XX		XX	XX	XX		XX		XX		
Siple		XX		XX	XX	XX			XX	XX	XX		
Slifko	XX	XX	XX	XX	XX	XX	XX	XX	XX	XX	XX		
Teske		XX											
Winget	XX	XX	XX	XX	XX	XX	XX	XX	XX		XX	SW	
Westerlund	XX	XX	XX	XX	XX	XX	XX	XX	XX	XX	XX		
Williams	XX	XX	XX		XX	XX	XX	XX	XX	XX	XX		

Meeting 27 (7/16/19) Chain saw safety
Metting 28 (7/23/19) Cell phone use
Meeting 29 (7/30/19) Awareness on the job
Meeting 30 (8/6/19) Common Sense
Meeting 31 (8/13/19) Bad Habits
Meeting 32 (8/20/19) All in the fun
Meeting 33 (8/27/19) Who is responsible for safety
Meeting 34 (9/3/19) Controlling Stress
Meeting 35 (9/10/19) 9/11
Meeting 36 (9/17/19) Auditing Ourselves
Meeting 37 (9/24/19) Getting plenty of sleep
Meeting 38 (10/1/19) Is there ever an excuse not to work safely?
Meeting 39 (10/8/19) Emergency Prepareness

Luke Reid

Public Works 2nd Quarter 2019 Safety Training

Date	7/16	7/23	7/30	8/6	8/13	8/20	8/27	9/3	9/10	9/17	9/24	10/1	10/8
Meeting #	27	28	29	30	31	32	33	34	35	36	37	38	39
Arnold	XX			XX	XX	XX	XX	XX	XX	XX	XX	XX	GA
Bartok	XX				XX	XX	XX	XX	XX	XX	XX	XX	
Bell	XX	XX	XX	XX		XX	XX	XX	XX	XX		XX	BKB
Cashman		XX				XX				XX		XX	BC
Clayton	XX	XX	XX	XX	XX	XX	XX	XX	XX	XX	XX	XX	DC
Dennison	XX		XX	XX	XX	XX	XX		XX	XX	XX	XX	JD
Geary	XX	XX	XX	XX	XX	XX	XX	XX	XX	XX	XX	XX	G
Gembala			XX	XX	XX	XX	XX		XX		XX	XX	
Hamilton													
Higgins	XX	XX	XX		XX	XX	XX	XX		XX	XX	XX	
Hoekstra	XX	XX		XX									
Knesek	XX	XX	XX	XX	XX	XX	XX	XX	XX	XX	XX		
Kokinda	XX	XX	XX	XX	XX		XX	XX	XX	XX	XX	XX	PK
Krestel	XX	XX	XX	XX	XX	XX	XX	XX	XX	XX	XX	XX	AK
Maslan											XX		
Matusik	XX	XX	XX	XX		XX	XX	XX	XX	XX		XX	SM
Mouratides		XX	XX	XX		XX	XX		XX	XX		XX	
Patricks	XX	XX	XX	XX	XX	XX	XX	XX	XX	XX	XX	XX	
Peterson	XX	XX	XX	XX	XX	XX	XX	XX	XX	XX	XX	XX	KP
Pipta	XX	XX	XX		XX	XX	XX	XX	XX				
Pizzuto	XX	XX	XX		XX	XX	XX	XX	XX	XX	XX	XX	
Plucinski		XX	XX	XX	XX	XX	XX	XX	XX	XX	XX	XX	
Rastosky	XX			XX	XX	XX	XX	XX	XX	XX	XX	XX	
Ruzycki			XX		XX	XX	XX		XX		XX	XX	
Siple		XX		XX	XX	XX			XX	XX	XX	XX	
Slifko	XX	XX	XX	XX	XX	XX	XX	XX	XX	XX	XX	XX	VS
Teske		XX											
Winget	XX	XX	XX	XX	XX	XX	XX	XX	XX		XX	XX	SW
Westerlund	XX	XX	XX	XX	XX	XX	XX	XX	XX	XX	XX		
Williams	XX	XX	XX		XX	XX	XX	XX	XX	XX	XX	XX	

Meeting 27 (7/16/19) Chain saw safety
Metting 28 (7/23/19) Cell phone use
Meeting 29 (7/30/19) Awareness on the job
Meeting 30 (8/6/19) Common Sense
Meeting 31 (8/13/19) Bad Habits
Meeting 32 (8/20/19) All in the fun
Meeting 33 (8/27/19) Who is responsible for safety
Meeting 34 (9/3/19) Controlling Stress
Meeting 35 (9/10/19) 9/11
Meeting 36 (9/17/19) Auditing Ourselves
Meeting 37 (9/24/19) Getting plenty of sleep
Meeting 38 (10/1/19) Is there ever an excuse not to work safely?
Meeting 39 (10/8/19) Emergency Prepareness

Luke Reid
Matthew Koladziej
Aaron Holder

Public Works 4th Quarter 2019 Safety Training

Date	10/1	10/8	10/15	10/22	10/29	11/5	11/12	11/19	11/26	12/3	12/10	12/17	12/24	12/31
Meeting #	38	39	40	41	42	43	44	45	46	47	48	49	50	51
Arnold	XX	XX	CA											
Bartok	XX	XX												
Bell	XX	XX	BLB											
Cashman	XX	XX	BJC											
Clayton	XX	XX	DC											
Dennison	XX	XX	JD											
Geary	XX	XX												
Gembala	XX	XX												
Hamilton														
Higgins	XX	XX												
Hoekstra														
Knesek														
Kokinda	XX	XX	DK											
Krestel	XX	XX	AK											
Maslan		XX												
Matusik	XX	XX	SM											
Mouratides	XX	XX												
Patricks	XX													
Peterson	XX	XX												
Pipta														
Pizzuto	XX													
Plucinski	XX	XX												
Rastosky	XX	XX	JR											
Ruzycki	XX	XX												
Siple	XX	XX												
Slifko	XX	XX												
Teske														
Winget	XX	XX	SW											
Westerlund		XX												
Williams	XX	XX												

Meeting 38 (10/1/19) Is there ever an excuse not to work safely?
Meeting 39 (10/8/19) Emergency Prepareness
Meeting 40 (10/18/19) A flood of danger
Meeting 41 (10/22/19) Driver Fatigue
Meeting 42 (10/29/19) Clearing Snow and Ice Safely
Meeting 43
Meeting 44
Meeting 45
Meeting 46
Meeting 47
Meeting 48
Meeting 49
Meeting 50
Meeting 51

Luke Reid
Matthew Kokalevej

Public Works 4th Quarter 2019 Safety Training

Date	10/1	10/8	10/15	10/22	10/29	11/5	11/12	11/19	11/26	12/3	12/10	12/17	12/24	12/31
Meeting #	38	39	40	41	42	43	44	45	46	47	48	49	50	51
Arnold	XX	XX	XX	GA										
Bartok	XX	XX	XX											
Bell	XX	XX	XX	BB										
Cashman	XX	XX	XX	BTC										
Clayton	XX	XX	XX	DC										
Dennison	XX	XX	XX	JD										
Geary	XX	XX	XX	CG										
Gembala	XX	XX	XX											
Hamilton														
Higgins	XX	XX	XX											
Hoekstra														
Knesek			XX											
Kokinda	XX	XX	XX	PK										
Krestel	XX	XX	XX	AK										
Maslan		XX												
Matusik	XX	XX	XX	SM										
Mouratides	XX	XX	XX											
Patricks	XX		XX											
Peterson	XX	XX	XX											
Pipta			XX											
Pizzuto	XX		XX											
Plucinski	XX	XX	XX											
Rastosky	XX	XX	XX	RR										
Ruzycki	XX	XX	XX											
Siple	XX	XX	XX											
Slifko	XX	XX	XX											
Teske														
Winget	XX	XX	XX	SW										
Westerlund		XX	XX											
Williams	XX	XX	XX											

Meeting 38 (10/1/19) Is there ever an excuse not to work safely?
Meeting 39 (10/8/19) Emergency Prepareness
Meeting 40 (10/18/19) A flood of danger
Meeting 41 (10/22/19) Driver Fatigue
Meeting 42 (10/29/19) Clearing Snow and Ice Safely
Meeting 43
Meeting 44
Meeting 45

Meeting 46
Meeting 47
Meeting 48
Meeting 49
Meeting 50
Meeting 51

Luke Reid

Kokodzicj 10/22 Dyn

Public Works 4th Quarter 2019 Safety Training

Date	10/1	10/8	10/15	10/22	10/29	11/5	11/12	11/19	11/26	12/3	12/10	12/17	12/24	12/31
Meeting #	38	39	40	41	42	43	44	45	46	47	48	49	50	51
Arnold	XX	XX	XX	XX	GA									
Bartok	XX	XX	XX	XX	PB									
Bell	XX	XX	XX	XX	BKB									
Cashman	XX	XX	XX	XX	BC									
Clayton	XX	XX	XX	XX	DC									
Dennison	XX	XX	XX	XX										
Geary	XX	XX	XX	XX	CG									
Gembala	XX	XX	XX	XX	[illegible]									
Hamilton														
Higgins	XX	XX	XX	XX	[illegible]									
Hoekstra														
Knesek			XX	XX										
Kokinda	XX	XX	XX	XX	PJC									
Krestel	XX	XX	XX	XX	AK									
Maslan		XX												
Matusik	XX	XX	XX	XX	SM									
Mouratides	XX	XX	XX	XX	[illegible]									
Patricks	XX		XX	XX	[illegible]									
Peterson	XX	XX	XX	XX	[illegible]									
Pipta			XX											
Pizzuto	XX		XX	XX	[illegible]									
Plucinski	XX	XX	XX	XX	[illegible]									
Rastosky	XX	XX	XX	XX	[illegible]									
Ruzycki	XX	XX	XX	XX	[illegible]									
Siple	XX	XX	XX	XX	[illegible]									
Slifko	XX	XX	XX	XX	TS									
Teske														
Winget	XX	XX	XX	XX	[illegible]									
Westerlund		XX	XX	XX	[illegible]									
Williams	XX	XX	XX	XX	[illegible]									

Meeting 38 (10/1/19) Is there ever an excuse not to work safely?
Meeting 39 (10/8/19) Emergency Prepareness
Meeting 40 (10/18/19) A flood of danger
Meeting 41 (10/22/19) Driver Fatigue
Meeting 42 (10/29/19) Clearing Snow and Ice Safely
Meeting 43
Meeting 44
Meeting 45
Meeting 46
Meeting 47
Meeting 48
Meeting 49
Meeting 50
Meeting 51

Luke Reid
[illegible]
Matthew Kolodziej

Public Works 4th Quarter 2019 Safety Training

Date	10/1	10/8	10/15	10/22	10/29	11/5	11/12	11/19	11/26	12/3	12/10	12/17	12/24	12/31
Meeting #	38	39	40	41	42	43	44	45	46	47	48	49	50	51
Arnold	XX	XX	XX	XX	XX									
Bartok	XX	XX	XX	XX	XX									
Bell	XX	XX	XX	XX	XX	BKB								
Cashman	XX	XX	XX	XX	XX	BTC								
Clayton	XX	XX	XX	XX	XX	DC								
Dennison	XX	XX	XX	XX										
Geary	XX	XX	XX	XX	XX	CG								
Gembala	XX	XX	XX	XX	XX	[illegible]								
Hamilton														
Higgins	XX	XX	XX	XX	XX									
Hoekstra														
Knesek			XX	XX	XX									
Kokinda	XX	XX	XX	XX	XX									
Krestel	XX	XX	XX	XX	XX	AK								
Maslan		XX												
Matusik	XX	XX	XX	XX	XX									
Mouratides	XX	XX	XX	XX	XX	[illegible]								
Patricks	XX		XX	XX	XX									
Peterson	XX	XX	XX	XX	XX	KP								
Pipta			XX			MP								
Pizzuto	XX		XX	XX	XX	[illegible]								
Plucinski	XX	XX	XX	XX	XX	[illegible]								
Rastosky	XX	XX	XX	XX	XX	KR								
Ruzycki	XX	XX	XX	XX	XX	BR								
Siple	XX	XX	XX	XX	XX	[illegible]								
Slifko	XX	XX	XX	XX	XX									
Teske														
Winget	XX	XX	XX	XX		SW								
Westerlund		XX	XX	XX	XX	[illegible]								
Williams	XX	XX	XX	XX	XX	[illegible]								

Meeting 38 (10/1/19) Is there ever an excuse not to work safely?
Meeting 39 (10/8/19) Emergency Prepareness
Meeting 40 (10/18/19) A flood of danger
Meeting 41 (10/22/19) Driver Fatigue
Meeting 42 (10/29/19) Clearing Snow and Ice Safely
Meeting 43 (11/5/19) Lightning
Meeting 44 (11/12/19) Facing up to stress
Meeting 45 (11/19/19) Power tools
Meeting 46 (11/26/19) Gate valve safety
Meeting 47 (12/3/19) Jackhammer safety
Meeting 48 (12/10/19) Equipment checks
Meeting 49 (12/17/19) Trenching
Meeting 50 12/31/19) PPE
Meeting 51

Matthew Kolodziej

Public Works 4th Quarter 2019 Safety Training

Date	10/1	10/8	10/15	10/22	10/29	11/5	11/12	11/19	11/26	12/3	12/10	12/17	12/24	12/31
Meeting #	38	39	40	41	42	43	44	45	46	47	48	49	50	51
Arnold	XX	XX	XX	XX	XX									
Bartok	XX	XX	XX	XX	XX									
Bell	XX	XX	XX	XX	XX	XX	XX							
Cashman	XX	XX	XX	XX	XX	XX	XX	BKB						
Clayton	XX	XX	XX	XX	XX	XX	XX	DC						
Geary	XX	XX	XX	XX	XX	XX	XX							
Gembala	XX	XX	XX	XX	XX	XX	XX							
Hamilton														
Higgins	XX	XX	XX	XX	XX		XX							
Knesek			XX	XX	XX									
Kokinda	XX	XX	XX	XX	XX									
Kolodziej			XX	XX	XX	XX	XX	MK						
Krestel	XX	XX	XX	XX	XX	XX	XX	AK						
Matusik	XX	XX	XX	XX	XX									
Mouratides	XX	XX	XX	XX	XX	XX	XX							
Peterson	XX	XX	XX	XX	XX	XX	XX							
Pipta			XX			XX		MP						
Pizzuto	XX		XX	XX	XX									
Plucinski	XX	XX	XX	XX	XX	XX	XX							
Rastosky	XX	XX	XX	XX	XX	XX		RR						
Ruzycki	XX	XX	XX	XX	XX	XX	XX							
Siple	XX	XX	XX	XX	XX	XX	XX							
Slifko	XX	XX	XX	XX	XX		XX							
Teske														
Winget	XX	XX	XX	XX		XX								
Westerlund		XX	XX	XX	XX	XX	XX							
Williams	XX	XX	XX	XX	XX	XX	XX							

Meeting 38 (10/1/19) Is there ever an excuse not to work safely?
Meeting 39 (10/8/19) Emergency Prepareness
Meeting 40 (10/18/19) A flood of danger
Meeting 41 (10/22/19) Driver Fatigue
Meeting 42 (10/29/19) Clearing Snow and Ice Safely
Meeting 43 (11/5/19) Lightning
Meeting 44 (11/12/19) Facing up to stress
Meeting 45 (11/19/19) Power tools
Meeting 46 (11/26/19) Gate valve safety
Meeting 47 (12/3/19) Jackhammer safety
Meeting 48 (12/10/19) Equipment checks
Meeting 49 (12/17/19) Trenching
Meeting 50 12/31/19) PPE
Meeting 51

Public Works 4th Quarter 2019 Safety Training

Date	10/1	10/8	10/15	10/22	10/29	11/5	11/12	11/19	11/26	12/3	12/10	12/17	12/24	12/31
Meeting #	38	39	40	41	42	43	44	45	46	47	48	49	50	51
Arnold	XX	XX	XX	XX	XX									
Bartok	XX	XX	XX	XX	XX			XX						
Bell	XX	XX	XX	XX	XX	XX	XX				BKB			
Cashman	XX	XX	XX	XX	XX	XX	XX	XX						
Clayton	XX	XX	XX	XX	XX	XX	XX	XX			DC			
Geary	XX	XX	XX	XX	XX	XX	XX	XX						
Gembala	XX	XX	XX	XX	XX	XX	XX	XX						
Hamilton														
Higgins	XX	XX	XX	XX	XX		XX							
Knesek			XX	XX	XX			XX						
Kokinda	XX	XX	XX	XX	XX									
Kolodziej			XX	XX	XX	XX	XX	XX			MK			
Krestel	XX	XX	XX	XX	XX	XX	XX	XX			AK			
Matusik	XX	XX	XX	XX	XX									
Mouratides	XX	XX	XX	XX	XX	XX	XX							
Peterson	XX	XX	XX	XX	XX	XX	XX							
Pipta			XX			XX		XX						
Pizzuto	XX		XX	XX	XX						WMP			
Plucinski	XX	XX	XX	XX	XX	XX	XX							
Rastosky	XX	XX	XX	XX	XX	XX		XX			LR			
Ruzycki	XX	XX	XX	XX	XX	XX	XX	XX						
Siple	XX	XX	XX	XX	XX	XX	XX	XX						
Slifko	XX	XX	XX	XX	XX		XX	XX						
Teske														
Winget	XX	XX	XX	XX		XX								
Westerlund		XX	XX	XX	XX	XX	XX	XX						
Williams	XX	XX	XX	XX	XX	XX	XX	XX						

Meeting 38 (10/1/19) Is there ever an excuse not to work safely?
Meeting 39 (10/8/19) Emergency Prepareness
Meeting 40 (10/18/19) A flood of danger
Meeting 41 (10/22/19) Driver Fatigue
Meeting 42 (10/29/19) Clearing Snow and Ice Safely
Meeting 43 (11/5/19) Lightning
Meeting 44 (11/12/19) Facing up to stress
Meeting 45 (11/19/19) Power tools
Meeting 46 (11/26/19) Gate valve safety
Meeting 47 (12/3/19) Jackhammer safety
Meeting 48 (12/10/19) Equipment checks
Meeting 49 (12/17/19) Trenching
Meeting 50 12/31/19) PPE
Meeting 51

Luke Reid

Public Works 4th Quarter 2019 Safety Training

Date	10/1	10/8	10/15	10/22	10/29	11/5	11/12	11/19	11/26	12/3	12/10	12/17	12/24	12/31
Meeting #	38	39	40	41	42	43	44	45	46	47	48	49	50	51
Arnold	XX	XX	XX	XX	XX									
Bartok	XX	XX	XX	XX	XX			XX						
Bell	XX	XX	XX	XX	XX	XX	XX				XX	XX		
Cashman	XX	XX	XX	XX	XX	XX	XX	XX				XX		
Clayton	XX	XX	XX	XX	XX	XX	XX	XX			XX	XX		
Geary	XX	XX	XX	XX	XX	XX	XX	XX				XX		
Gembala	XX	XX	XX	XX	XX	XX	XX	XX						
Hamilton														
Higgins	XX	XX	XX	XX	XX		XX					XX		
Knesek			XX	XX	XX			XX			XX	XX		
Kokinda	XX	XX	XX	XX	XX							XX		
Kolodziej			XX	XX	XX	XX	XX	XX			XX	XX		
Krestel	XX	XX	XX	XX	XX	XX	XX	XX			XX	XX		
Matusik	XX	XX	XX	XX	XX							XX		
Mouratides	XX	XX	XX	XX	XX	XX	XX							
Peterson	XX	XX	XX	XX	XX	XX	XX					XX		
Pipta			XX			XX		XX						
Pizzuto	XX		XX	XX	XX						XX	XX		
Plucinski	XX	XX	XX	XX	XX	XX	XX				XX	XX		
Rastosky	XX	XX	XX	XX	XX	XX		XX			XX	XX		
Ruzycki	XX	XX	XX	XX	XX	XX	XX	XX			XX	XX		
Siple	XX	XX	XX	XX	XX	XX	XX	XX			XX	XX		
Slifko	XX	XX	XX	XX	XX		XX	XX				XX		
Teske												XX		
Winget	XX	XX	XX	XX		XX								
Westerlund		XX	XX	XX	XX	XX	XX	XX			XX	XX		
Williams	XX	XX	XX	XX	XX	XX	XX	XX			XX	XX		

Meeting 38 (10/1/19) Is there ever an excuse not to work safely?
Meeting 39 (10/8/19) Emergency Prepareness
Meeting 40 (10/18/19) A flood of danger
Meeting 41 (10/22/19) Driver Fatigue
Meeting 42 (10/29/19) Clearing Snow and Ice Safely
Meeting 43 (11/5/19) Lightning
Meeting 44 (11/12/19) Facing up to stress
Meeting 45 (11/19/19) Power tools
Meeting 46 (11/26/19) Gate valve safety
Meeting 47 (12/3/19) Jackhammer safety
Meeting 48 (12/10/19) Equipment checks
Meeting 49 (12/17/19) Trenching
Meeting 50 12/31/19) PPE
Meeting 51

Public Works 4th Quarter 2019 Safety Training

Date	10/1	10/8	10/15	10/22	10/29	11/5	11/12	11/19	11/26	12/3	12/10	12/17	12/24	12/31
Meeting #	38	39	40	41	42	43	44	45	46	47	48	49	50	51
Arnold	XX	XX	XX	XX	XX									
Bartok	XX	XX	XX	XX	XX			XX						
Bell	XX	XX	XX	XX	XX	XX	XX				XX	BKB		
Cashman	XX	XX	XX	XX	XX	XX	XX	XX				BC		
Clayton	XX	XX	XX	XX	XX	XX	XX	XX			XX	DC		
Geary	XX	XX	XX	XX	XX	XX	XX	XX				CG		
Gembala	XX	XX	XX	XX	XX	XX	XX	XX						
Hamilton														
Higgins	XX	XX	XX	XX	XX		XX					RH		
Knesek			XX	XX	XX			XX			XX			
Kokinda	XX	XX	XX	XX	XX							DL		
Kolodziej			XX	XX	XX	XX	XX	XX			XX	MK		
Krestel	XX	XX	XX	XX	XX	XX	XX	XX			XX	AK		
Matusik	XX	XX	XX	XX	XX							SM		
Mouratides	XX	XX	XX	XX	XX	XX	XX							
Peterson	XX	XX	XX	XX	XX	XX	XX					HP		
Pipta			XX			XX		XX						
Pizzuto	XX		XX	XX	XX						XX	DMP		
Plucinski	XX	XX	XX	XX	XX	XX	XX				XX			
Rastosky	XX	XX	XX	XX	XX	XX		XX			XX	MR		
Ruzycki	XX	XX	XX	XX	XX	XX	XX	XX			XX	BR		
Siple	XX	XX	XX	XX	XX	XX	XX	XX			XX	[illegible]		
Slifko	XX	XX	XX	XX	XX		XX	XX				[illegible]		
Teske												GT		
Winget	XX	XX	XX	XX		XX								
Westerlund		XX	XX	XX	XX	XX	XX	XX			XX	[illegible]		
Williams	XX	XX	XX	XX	XX	XX	XX	XX			XX	[illegible]		

Meeting 38 (10/1/19) Is there ever an excuse not to work safely?
Meeting 39 (10/8/19) Emergency Prepareness
Meeting 40 (10/18/19) A flood of danger
Meeting 41 (10/22/19) Driver Fatigue
Meeting 42 (10/29/19) Clearing Snow and Ice Safely
Meeting 43 (11/5/19) Lightning
Meeting 44 (11/12/19) Facing up to stress
Meeting 45 (11/19/19) Power tools

Meeting 46 (11/26/19) Gate valve safety
Meeting 47 (12/3/19) Jackhammer safety
Meeting 48 (12/10/19) Equipment checks
Meeting 49 (12/17/19) Trenching
Meeting 50 12/31/19) PPE
Meeting 51

Luke Reid

Public Works 1st Quarter 2020 Safety Training

Date	1/7	1/14	1/21	1/28	2/4	2/11	2/18	2/25	3/3	3/10	3/17	3/24	3/31
Meeting #	1	2	3	4	5	6	7	8	9	10	11	12	13
Apps	[illegible]												
Arnold	GA												
Bartok	[illegible]												
Bell	BKB												
Cashman													
Clayton													
Gardner													
Geary	CG												
Gembala	[illegible]												
Hamilton													
Higgins													
Holder	~~MH~~												
Klocek													
Kolodziej	MK												
Kokinda	PK												
Knesek													
Krestel	AK												
Matusik	JM												
Mouratides													
Peterson	KP												
Pipta													
Pizzuto	[illegible]												
Plucinski	[illegible]												
Rastosky													
Ruzycki	BR												
Siple	[illegible]												
Slifko	[illegible]												
Teske													
Westerlund	[illegible]												
Williams	[illegible]												
Winget	[illegible]												

Luke Reid

	Date	Topic
Meeting 1	1/7	
Meeting 2	1/14	
Meeting 3	1/21	
Meeting 4	1/28	
Meeting 5	2/4	
Meeting 6	2/11	
Meeting 7	2/18	

	Date	Topic
Meeting 8	2/25	
Meeting 9	3/3	
Meeting 10	3/10	Flu Prevention
Meeting 11	3/17	Confined Space
Meeting 12	3/24	Hand Washing
Meeting 13	3/31	Chainsaw Safety

Public Works 1st Quarter 2020 Safety Training

Date	1/7	1/14	1/21	1/28	2/4	2/11	2/18	2/25	3/3	3/10	3/17	3/24	3/31
Meeting #	1	2	3	4	5	6	7	8	9	10	11	12	13
Apps										XX	ga	JA	
Arnold										XX	GA		
Bartok										XX		DB	
Bell										XX	BB		
Cashman											BC	DC	
Clayton											DC		
Gardner													
Geary										XX	CG	CG	
Gembala										XX	TG	TG	
Hamilton													
Higgins											KRH		
Holder										XX	GH	GH	
Klocek											DK		
Kolodziej										XX	MK		
Kokinda										XX	PK	PK	
Knesek										XX			
Krestel										XX	AK		
Matusik										XX			
Mouratides													
Peterson										XX	KP		
Pipta													
Pizzuto										XX	[illegible]		
Plucinski										XX			
Rastosky											KR		
Ruzycki										XX	BR	KB	
Siple										XX	AS	JS	
Slifko										XX	TJ		
Teske													
Westerlund										XX	TW	TW	
Williams										XX	LW		
Winget										XX			

Luke Reid

	Date	Topic
Meeting 1	1/7	
Meeting 2	1/14	
Meeting 3	1/21	
Meeting 4	1/28	
Meeting 5	2/4	
Meeting 6	2/11	
Meeting 7	2/18	

	Date	Topic
Meeting 8	2/25	
Meeting 9	3/3	
Meeting 10	3/10	Flu Prevention
Meeting 11	3/17	Hand Washing
Meeting 12	3/24	Confined Space
Meeting 13	3/31	Chainsaw Safety

Public Works 1st Quarter 2020 Safety Training

Date	1/7	1/14	1/21	1/28	2/4	2/11	2/18	2/25	3/3	3/10	3/17	3/24	3/31
Meeting #	1	2	3	4	5	6	7	8	9	10	11	12	13
Apps										XX	XX	JA	
Arnold										XX	XX		
Bartok										XX		PB	
Bell										XX	XX	B&B	
Cashman											XX	BC	
Clayton											XX	DC	
Gardner													
Geary										XX	XX	CG	
Gembala										XX	XX	TG	
Hamilton													
Higgins											XX	KH	
Holder										XX	XX	GH	
Klocek											XX	TK	
Kolodziej										XX	XX		
Kokinda										XX	XX	PK	
Knesek										XX		mk	
Krestel										XX	XX		
Matusik										XX		Sm	
Mouratides												JM	
Peterson										XX	XX	PP	
Pipta													
Pizzuto										XX	XX	[illegible]	
Plucinski										XX		BR	
Rastosky											XX	KR	
Ruzycki										XX	XX	BR	
Siple										XX	XX	JS	
Slifko										XX	XX	TS	
Teske													
Westerlund										XX	XX	TW	
Williams										XX	XX	LW	
Winget										XX		SW	

	Date	Topic
Meeting 1	1/7	
Meeting 2	1/14	
Meeting 3	1/21	
Meeting 4	1/28	
Meeting 5	2/4	
Meeting 6	2/11	
Meeting 7	2/18	

	Date	Topic
Meeting 8	2/25	
Meeting 9	3/3	
Meeting 10	3/10	Flu Prevention
Meeting 11	3/17	Hand Washing
Meeting 12	3/24	Confined Space
Meeting 13	3/31	Chainsaw Safety

Public Works 1st Quarter 2020 Safety Training

Date	1/7	1/14	1/21	1/28	2/4	2/11	2/18	2/25	3/3	3/10	3/17	3/24	3/31
Meeting #	1	2	3	4	5	6	7	8	9	10	11	12	13
Apps										XX	XX	XX	JA
Arnold										XX	XX		[illegible]
Bartok										XX		XX	PB
Bell										XX	XX	XX	BKB
Cashman											XX	XX	BC
Clayton											XX	XX	DC
Gardner													
Geary										XX	XX	XX	CG
Gembala										XX	XX	XX	TG
Hamilton													
Higgins											XX	XX	KH
Holder										XX	XX	XX	GH
Klocek											XX	XX	[illegible]
Kolodziej										XX	XX		
Kokinda										XX	XX	XX	PK
Knesek										XX		XX	
Krestel										XX	XX		AK
Matusik										XX		XX	[illegible]
Mouratides												XX	
Peterson										XX	XX	XX	[illegible]
Pipta													
Pizzuto										XX	XX	XX	[illegible]
Plucinski										XX		XX	[illegible]
Rastosky											XX	XX	KB
Ruzycki										XX	XX	XX	RR
Siple										XX	XX	XX	JS
Slifko										XX	XX	XX	[illegible]
Teske													
Westerlund										XX	XX	XX	TW
Williams										XX	XX	XX	LW
Winget										XX		XX	

	Date	Topic
Meeting 1	1/7	
Meeting 2	1/14	
Meeting 3	1/21	
Meeting 4	1/28	
Meeting 5	2/4	
Meeting 6	2/11	
Meeting 7	2/18	

	Date	Topic
Meeting 8	2/25	
Meeting 9	3/3	
Meeting 10	3/10	Flu Prevention
Meeting 11	3/17	Hand Washing
Meeting 12	3/24	Confined Space
Meeting 13	3/31	Chainsaw Safety

Public Works 1st Quarter 2020 Safety Training

Date	1/7	1/14	1/21	1/28	2/4	2/11	2/18	2/25	3/3	3/10	3/17	3/24	3/31
Meeting #	1	2	3	4	5	6	7	8	9	10	11	12	13
Apps										XX	XX	XX	XX
Arnold										XX	XX		XX
Bartok										XX		XX	XX
Bell										XX	XX	XX	XX
Cashman											XX	XX	XX
Clayton											XX	XX	XX
Gardner													
Geary										XX	XX	XX	XX
Gembala										XX	XX	XX	XX
Hamilton													
Higgins											XX	XX	XX
Holder										XX	XX	XX	XX
Klocek											XX	XX	XX
Kolodziej										XX	XX		
Kokinda										XX	XX	XX	XX
Knesek										XX		XX	
Krestel										XX	XX		XX
Matusik										XX		XX	XX
Mouratides												XX	
Peterson										XX	XX	XX	XX
Pipta													
Pizzuto										XX	XX	XX	XX
Plucinski										XX		XX	XX
Rastosky											XX	XX	XX
Ruzycki										XX	XX	XX	XX
Siple										XX	XX	XX	XX
Slifko										XX	XX	XX	XX
Teske													
Westerlund										XX	XX	XX	XX
Williams										XX	XX	XX	XX
Winget										XX		XX	

	Date	Topic
Meeting 1	1/7	
Meeting 2	1/14	
Meeting 3	1/21	
Meeting 4	1/28	
Meeting 5	2/4	
Meeting 6	2/11	
Meeting 7	2/18	

	Date	Topic
Meeting 8	2/25	
Meeting 9	3/3	
Meeting 10	3/10	Flu Prevention
Meeting 11	3/17	Hand Washing
Meeting 12	3/24	Confined Space
Meeting 13	3/31	Chainsaw Safety

Public Works 1st Quarter 2020 Safety Training

Date	4/7	4/14	4/21	4/28	5/5	5/12	5/19	5/26	6/2	6/9	6/16	6/23	6/30
Meeting #	1	2	3	4	5	6	7	8	9	10	11	12	13
Apps	JA												
Arnold													
Bartok	PB												
Bell	BKB												
Cashman	DC												
Clayton	X												
Gardner													
Geary	CG												
Gembala	TG												
Hamilton													
Higgins	KH												
Holder	X												
Klocek	X												
Kolodziej													
Kokinda	PK												
Knesek													
Krestel	AK												
Matusik	X												
Mouratides													
Peterson	P												
Pipta													
Pizzuto	X												
Plucinski	X												
Rastosky	KR												
Ruzycki	X												
Siple	TS												
Slifko	X												
Teske													
Westerlund	TW												
Williams													
Winget	X												

	Date	Topic
Meeting 1	4/7	Safety Awareness
Meeting 2	4/14	
Meeting 3	4/21	
Meeting 4	4/28	
Meeting 5	5/5	
Meeting 6	5/12	
Meeting 7	5/19	

	Date	Topic
Meeting 8	5/26	
Meeting 9	6/2	
Meeting 10	6/9	
Meeting 11	6/16	
Meeting 12	6/23	
Meeting 13	6/30	

Public Works 1st Quarter 2020 Safety Training

Date	4/7	4/14	4/21	4/28	5/5	5/12	5/19	5/26	6/2	6/9	6/16	6/23	6/30
Meeting #	1	2	3	4	5	6	7	8	9	10	11	12	13
Apps	XX	TA											
Arnold		X											
Bartok	XX	PB											
Bell	XX	BKB											
Cashman	XX	BC											
Clayton	XX	X											
Gardner													
Geary	XX	CG											
Gembala	XX	TG											
Hamilton													
Higgins	XX	KH											
Holder	XX	X											
Klocek	XX	X											
Kolodziej		MK											
Kokinda	XX												
Knesek													
Krestel	XX	AK											
Matusik	XX	X											
Mouratides													
Peterson	XX	X											
Pipta													
Pizzuto	XX	X											
Plucinski	XX	X											
Rastosky	XX	KB											
Ruzycki	XX	X											
Siple	XX	JS											
Slifko	XX	X											
Teske													
Westerlund	XX	TW											
Williams		X											
Winget	XX	X											

	Date	Topic
Meeting 1	4/7	Safety Awareness
Meeting 2	4/14	We Know Beter!
Meeting 3	4/21	
Meeting 4	4/28	
Meeting 5	5/5	
Meeting 6	5/12	
Meeting 7	5/19	

	Date	Topic
Meeting 8	5/26	
Meeting 9	6/2	
Meeting 10	6/9	
Meeting 11	6/16	
Meeting 12	6/23	
Meeting 13	6/30	

Public Works 1st Quarter 2020 Safety Training

Date	4/7	4/14	4/21	4/28	5/5	5/12	5/19	5/26	6/2	6/9	6/16	6/23	6/30
Meeting #	1	2	3	4	5	6	7	8	9	10	11	12	13
Apps	XX	XX	JA										
Arnold		XX											
Bartok	XX	XX	PB										
Bell	XX	XX	BKB										
Cashman	XX	XX	DC										
Clayton	XX	XX	DC										
Gardner													
Geary	XX	XX	CG										
Gembala	XX	XX	TG										
Hamilton													
Higgins	XX	XX											
Holder	XX	XX	GH										
Klocek	XX	XX											
Kolodziej		XX											
Kokinda	XX		PK										
Knesek													
Krestel	XX	XX	AK										
Matusik	XX	XX											
Mouratides													
Peterson	XX	XX											
Pipta													
Pizzuto	XX	XX											
Plucinski	XX	XX											
Rastosky	XX	XX	KR										
Ruzycki	XX	XX	BJ										
Siple	XX	XX											
Slifko	XX	XX											
Teske													
Westerlund	XX	XX	TW										
Williams		XX											
Winget	XX	XX											

	Date	Topic
Meeting 1	4/7	Safety Awareness
Meeting 2	4/14	We Know Beter!
Meeting 3	4/21	Safe Lifting Techniques
Meeting 4	4/28	
Meeting 5	5/5	
Meeting 6	5/12	
Meeting 7	5/19	

	Date	Topic
Meeting 8	5/26	
Meeting 9	6/2	
Meeting 10	6/9	
Meeting 11	6/16	
Meeting 12	6/23	
Meeting 13	6/30	

Public Works 1st Quarter 2020 Safety Training

Date	4/7	4/14	4/21	4/28	5/5	5/12	5/19	5/26	6/2	6/9	6/16	6/23	6/30
Meeting #	1	2	3	4	5	6	7	8	9	10	11	12	13
Apps	XX	XX	XX	XX	JA								
Arnold		XX		XX	GA								
Bartok	XX	XX	XX	XX	PB								
Bell	XX	XX	XX	XX	DKB								
Cashman	XX	XX	XX	XX	BC								
Clayton	XX	XX	XX	XX	DC								
Gardner													
Geary	XX	XX	XX	XX	CG								
Gembala	XX	XX	XX	XX	TG								
Hamilton													
Higgins	XX	XX	XX	XX	KH								
Holder	XX	XX	XX	XX	GH								
Klocek	XX	XX		XX	DK								
Kolodziej		XX											
Kokinda	XX		XX	XX	PK								
Knesek													
Krestel	XX	XX	XX	XX	AK								
Matusik	XX	XX		XX	Sm								
Mouratides													
Peterson	XX	XX		XX	KP								
Pipta													
Pizzuto	XX	XX		XX	DP								
Plucinski	XX	XX	XX	XX	BP								
Rastosky	XX	XX	XX	XX	KB								
Ruzycki	XX	XX	XX	XX	BR								
Siple	XX	XX		XX	JS								
Slifko	XX	XX		XX	TS								
Teske													
Westerlund	XX	XX	XX	XX	TW								
Williams		XX		XX									
Winget	XX	XX		XX	SW								

	Date	Topic
Meeting 1	4/7	Safety Awareness
Meeting 2	4/14	We Know Beter!
Meeting 3	4/21	Safe Lifting Techniques
Meeting 4	4/28	Wearing Earplugs Properly
Meeting 5	5/5	A Flood Of Danger
Meeting 6	5/12	
Meeting 7	5/19	

	Date	Topic
Meeting 8	5/26	
Meeting 9	6/2	
Meeting 10	6/9	
Meeting 11	6/16	
Meeting 12	6/23	
Meeting 13	6/30	

Public Works 1st Quarter 2020 Safety Training

Date	4/7	4/14	4/21	4/28	5/5	5/12	5/19	5/26	6/2	6/9	6/16	6/23	6/30
Meeting #	1	2	3	4	5	6	7	8	9	10	11	12	13
Apps	XX	XX	XX	XX	XX	JA							
Arnold		XX		XX	XX	GA							
Bartok	XX	XX	XX	XX	XX	PB							
Bell	XX	XX	XX	XX	XX	BKB							
Cashman	XX	XX	XX	XX	XX	BC							
Clayton	XX	XX	XX	XX	XX	DC—D							
Gardner													
Geary	XX	XX	XX	XX	XX	CG							
Gembala	XX	XX	XX	XX	XX	TG							
Hamilton													
Higgins	XX	XX	XX	XX	XX	KH							
Holder	XX	XX	XX	XX	XX	GH							
Klocek	XX	XX		XX	XX	D.K							
Kolodziej		XX											
Kokinda	XX		XX	XX	XX	PK							
Knesek													
Krestel	XX	XX	XX	XX	XX	AK							
Matusik	XX	XX		XX	XX								
Mouratides													
Peterson	XX	XX		XX	XX								
Pipta													
Pizzuto	XX	XX		XX	XX								
Plucinski	XX	XX	XX	XX	XX								
Rastosky	XX	XX	XX	XX	XX	KR							
Ruzycki	XX	XX	XX	XX	XX								
Siple	XX	XX		XX	XX	JS							
Slifko	XX	XX		XX	XX								
Teske													
Westerlund	XX	XX	XX	XX	XX	TW							
Williams		XX		XX									
Winget	XX	XX		XX	XX	SW							

	Date	Topic
Meeting 1	4/7	Safety Awareness
Meeting 2	4/14	We Know Beter!
Meeting 3	4/21	Safe Lifting Techniques
Meeting 4	4/28	Wearing Earplugs Properly
Meeting 5	5/5	A Flood Of Danger
Meeting 6	5/12	Are You Safe Or Just Lucky?
Meeting 7	5/19	

	Date	Topic
Meeting 8	5/26	
Meeting 9	6/2	
Meeting 10	6/9	
Meeting 11	6/16	
Meeting 12	6/23	
Meeting 13	6/30	

Public Works 1st Quarter 2020 Safety Training

Date	4/7	4/14	4/21	4/28	5/5	5/12	5/19	5/26	6/2	6/9	6/16	6/23	6/30
Meeting #	1	2	3	4	5	6	7	8	9	10	11	12	13
Apps	XX	XX	XX	XX	XX	XX	JA						
Arnold		XX		XX	XX	XX	GA						
Bartok	XX	XX	XX	XX	XX	XX	PB						
Bell	XX	XX	XX	XX	XX	XX	BB						
Cashman	XX	XX	XX	XX	XX	XX	BC						
Clayton	XX	XX	XX	XX	XX	XX	DC						
Gardner													
Geary	XX	XX	XX	XX	XX	XX	CG						
Gembala	XX	XX	XX	XX	XX	XX	TG						
Hamilton													
Higgins	XX	XX	XX	XX	XX	XX	KH						
Holder	XX	XX	XX	XX	XX	XX	GH						
Klocek	XX	XX		XX	XX	XX	DK						
Kolodziej		XX											
Kokinda	XX		XX	XX	XX	XX	PK						
Knesek													
Krestel	XX	XX	XX	XX	XX	XX	AK						
Matusik	XX	XX		XX	XX		SM						
Mouratides													
Peterson	XX	XX		XX	XX	XX	KP						
Pipta													
Pizzuto	XX	XX		XX	XX		DP						
Plucinski	XX	XX	XX	XX	XX	XX	BP						
Rastosky	XX	XX	XX	XX	XX	XX	KA						
Ruzycki	XX	XX	XX	XX	XX		BR						
Siple	XX	XX		XX	XX	XX	JS						
Slifko	XX	XX		XX	XX		VS						
Teske													
Westerlund	XX	XX	XX	XX	XX	XX	TW						
Williams		XX		XX			LW						
Winget	XX	XX		XX	XX	XX	SW						

AC
BB

	Date	Topic
Meeting 1	4/7	Safety Awareness
Meeting 2	4/14	We Know Beter!
Meeting 3	4/21	Safe Lifting Techniques
Meeting 4	4/28	Wearing Earplugs Properly
Meeting 5	5/5	A Flood Of Danger
Meeting 6	5/12	Are You Safe Or Just Lucky?
Meeting 7	5/19	Foot Protection

	Date	Topic
Meeting 8	5/26	
Meeting 9	6/2	
Meeting 10	6/9	
Meeting 11	6/16	
Meeting 12	6/23	
Meeting 13	6/30	

Public Works 1st Quarter 2020 Safety Training

Date	4/7	4/14	4/21	4/28	5/5	5/12	5/19	5/26	6/2	6/9	6/16	6/23	6/30
Meeting #	1	2	3	4	5	6	7	8	9	10	11	12	13
Apps	XX	XX	XX	XX	XX	XX	XX	JA					
Arnold		XX		XX	XX	XX	XX	CA					
Bartok	XX	XX	XX	XX	XX	XX	XX	PB					
Bell	XX	XX	XX	XX	XX	XX	XX	BB					
Cashman	XX	XX	XX	XX	XX	XX	XX	BC					
Clayton	XX	XX	XX	XX	XX	XX	XX						
Gardner													
Geary	XX	XX	XX	XX	XX	XX	XX	CG					
Gembala	XX	XX	XX	XX	XX	XX	XX	TG					
Hamilton													
Higgins	XX	XX	XX	XX	XX	XX	XX	KH					
Holder	XX	XX	XX	XX	XX	XX	XX	GH					
Klocek	XX	XX		XX	XX	XX	XX	DK					
Kolodziej		XX											
Kokinda	XX		XX	XX	XX	XX	XX						
Knesek													
Krestel	XX	XX	XX	XX	XX	XX	XX	AK					
Matusik	XX	XX		XX	XX		XX						
Mouratides													
Peterson	XX	XX		XX	XX	XX	XX						
Pipta								MP					
Pizzuto	XX	XX		XX	XX		XX	DP					
Plucinski	XX	XX	XX	XX	XX	XX	XX	WP					
Rastosky	XX	XX	XX	XX	XX	XX	XX	KB					
Ruzycki	XX	XX	XX	XX	XX		XX	BR					
Siple	XX	XX		XX	XX	XX	XX	JS					
Slifko	XX	XX		XX	XX		XX	TJ					
Teske								BT					
Westerlund	XX	XX	XX	XX	XX	XX	XX	TW					
Williams		XX		XX			XX	LW					
Winget	XX	XX		XX	XX	XX	XX	SW					

BBAC

	Date	Topic
Meeting 1	4/7	Safety Awareness
Meeting 2	4/14	We Know Beter!
Meeting 3	4/21	Safe Lifting Techniques
Meeting 4	4/28	Wearing Earplugs Properly
Meeting 5	5/5	A Flood Of Danger
Meeting 6	5/12	Are You Safe Or Just Lucky?
Meeting 7	5/19	Foot Protection

	Date	Topic
Meeting 8	5/26	Effective Hand Washing
Meeting 9	6/2	
Meeting 10	6/9	
Meeting 11	6/16	
Meeting 12	6/23	
Meeting 13	6/30	

Public Works 1st Quarter 2020 Safety Training

Date	4/7	4/14	4/21	4/28	5/5	5/12	5/19	5/26	6/2	6/9	6/16	6/23	6/30
Meeting #	1	2	3	4	5	6	7	8	9	10	11	12	13
Apps	XX	XX	XX	XX	XX	XX	XX	XX	JA				
Arnold		XX		XX	XX	XX	XX	XX	GA				
Bartok	XX	XX	XX	XX	XX	XX	XX	XX					
Bell	XX	XX	XX	XX	XX	XX	XX	XX	BB				
Cashman	XX	XX	XX	XX	XX	XX	XX	XX	BC				
Clayton	XX	XX	XX	XX	XX	XX	XX						
Gardner													
Geary	XX	XX	XX	XX	XX	XX	XX	XX	CG				
Gembala	XX	XX	XX	XX	XX	XX	XX	XX	TG				
Hamilton													
Higgins	XX	XX	XX	XX	XX	XX	XX	XX	KH				
Holder	XX	XX	XX	XX	XX	XX	XX	XX	BH				
Klocek	XX	XX		XX	XX	XX	XX	XX					
Kolodziej		XX											
Kokinda	XX		XX	XX	XX	XX	XX		PK				
Knesek													
Krestel	XX	XX	XX	XX	XX	XX	XX	XX					
Matusik	XX	XX		XX	XX		XX		SM				
Mouratides													
Peterson	XX	XX		XX	XX	XX	XX						
Pipta													
Pizzuto	XX	XX		XX	XX		XX	XX	DP				
Plucinski	XX	XX	XX	XX	XX	XX	XX	XX	BP				
Rastosky	XX	XX	XX	XX	XX	XX	XX	XX	KB				
Ruzycki	XX	XX	XX	XX	XX		XX	XX	BR				
Siple	XX	XX		XX	XX	XX	XX	XX	JS				
Slifko	XX	XX		XX	XX		XX	XX	TS				
Teske								XX					
Westerlund	XX	XX	XX	XX	XX	XX	XX	XX					
Williams		XX		XX			XX	XX	LW				
Winget	XX	XX		XX	XX	XX	XX	XX					

	Date	Topic
Meeting 1	4/7	Safety Awareness
Meeting 2	4/14	We Know Beter!
Meeting 3	4/21	Safe Lifting Techniques
Meeting 4	4/28	Wearing Earplugs Properly
Meeting 5	5/5	A Flood Of Danger
Meeting 6	5/12	Are You Safe Or Just Lucky?
Meeting 7	5/19	Foot Protection

	Date	Topic
Meeting 8	5/26	Effective Hand Washing
Meeting 9	6/2	Importance Of Hydration
Meeting 10	6/9	
Meeting 11	6/16	
Meeting 12	6/23	
Meeting 13	6/30	

Luke Reid
Brian Bowerridge
Austin Cook

Public Works 1st Quarter 2020 Safety Training

Date	4/7	4/14	4/21	4/28	5/5	5/12	5/19	5/26	6/2	6/9	6/16	6/23	6/30
Meeting #	1	2	3	4	5	6	7	8	9	10	11	12	13
Apps	XX	XX	XX	XX	XX	XX	XX	XX	XX	JA			
Arnold		XX		XX	XX	XX	XX	XX	XX	GA			
Bartok	XX	XX	XX	XX	XX	XX	XX	XX					
Bell	XX	XX	XX	XX	XX	XX	XX	XX	XX	BD			
Cashman	XX	XX	XX	XX	XX	XX	XX	XX	XX	BC			
Clayton	XX	XX	XX	XX	XX	XX	XX						
Gardner													
Geary	XX	XX	XX	XX	XX	XX	XX	XX	XX	CG			
Gembala	XX	XX	XX	XX	XX	XX	XX	XX	XX	TG			
Hamilton													
Higgins	XX	XX	XX	XX	XX	XX	XX	XX	XX	KH			
Holder	XX	XX	XX	XX	XX	XX	XX	XX	XX	GH			
Klocek	XX	XX		XX	XX	XX	XX	XX		DK			
Kolodziej		XX											
Kokinda	XX		XX	XX	XX	XX	XX		XX	PK			
Knesek													
Krestel	XX	XX	XX	XX	XX	XX	XX	XX					
Matusik	XX	XX		XX	XX		XX		XX	SM			
Mouratides													
Peterson	XX	XX		XX	XX	XX	XX						
Pipta													
Pizzuto	XX	XX		XX	XX		XX	XX	XX	DP			
Plucinski	XX	XX	XX	XX	XX	XX	XX	XX	XX	BP			
Rastosky	XX	XX	XX	XX	XX	XX	XX	XX	XX	KR			
Ruzycki	XX	XX	XX	XX	XX		XX	XX	XX	BR			
Siple	XX	XX		XX	XX	XX	XX	XX	XX	JS			
Slifko	XX	XX		XX	XX		XX	XX	XX	TS			
Teske								XX					
Westerlund	XX	XX	XX	XX	XX	XX	XX	XX		TW			
Williams		XX		XX			XX	XX	XX				
Winget	XX	XX		XX	XX	XX	XX	XX		SW			

	Date	Topic
Meeting 1	4/7	Safety Awareness
Meeting 2	4/14	We Know Beter!
Meeting 3	4/21	Safe Lifting Techniques
Meeting 4	4/28	Wearing Earplugs Properly
Meeting 5	5/5	A Flood Of Danger
Meeting 6	5/12	Are You Safe Or Just Lucky?
Meeting 7	5/19	Foot Protection

	Date	Topic
Meeting 8	5/26	Effective Hand Washing
Meeting 9	6/2	Importance Of Hydration
Meeting 10	6/9	First Aid Awareness
Meeting 11	6/16	
Meeting 12	6/23	
Meeting 13	6/30	

BB JB
JH
LR
[illegible]

Public Works 1st Quarter 2020 Safety Training

Date	4/7	4/14	4/21	4/28	5/5	5/12	5/19	5/26	6/2	6/9	6/16	6/23	6/30
Meeting #	1	2	3	4	5	6	7	8	9	10	11	12	13
Apps	XX	XX	XX	XX	XX	XX	XX	XX	XX	XX	JA	JA	
Arnold		XX		XX	XX	XX	XX	XX	XX	XX	(		
Bartok	XX	XX	XX	XX	XX	XX	XX	XX			PB	PB	
Bell	XX	XX	XX	XX	XX	XX	XX	XX	XX	XX		BB	
Cashman	XX	XX	XX	XX	XX	XX	XX	XX	XX	XX	BC	BC	
Clayton	XX	XX	XX	XX	XX	XX	XX						
Gardner													
Geary	XX	XX	XX	XX	XX	XX	XX	XX	XX	XX	CG	CG	
Gembala	XX	XX	XX	XX	XX	XX	XX	XX	XX	XX	TG	TG	
Hamilton													
Higgins	XX	XX	XX	XX	XX	XX	XX	XX	XX	XX	KH	KH	
Holder	XX	XX	XX	XX	XX	XX	XX	XX	XX	XX	GH		
Klocek	XX	XX		XX	XX	XX	XX	XX		XX	DK		
Kolodziej		XX											
Kokinda	XX		XX	XX	XX	XX	XX		XX	XX	PK	PK	
Knesek													
Krestel	XX	XX	XX	XX	XX	XX	XX	XX		XX	AK	AK	
Matusik	XX	XX		XX	XX		XX		XX	XX	SM	SM	
Mouratides													
Peterson	XX	XX		XX	XX	XX	XX						
Pipta													
Pizzuto	XX	XX		XX	XX		XX	XX	XX	XX	DP	DP	
Plucinski	XX	XX	XX	XX	XX	XX	XX	XX	XX	XX	BP	BP	
Rastosky	XX	XX	XX	XX	XX	XX	XX	XX	XX	XX	KB	KB	
Ruzycki	XX	XX	XX	XX	XX		XX	XX	XX	XX	BB	BB	
Siple	XX	XX		XX	XX	XX	XX	XX	XX	XX	JS		
Slifko	XX	XX		XX	XX		XX	XX	XX	XX	TS	TS	
Teske								XX					
Westerlund	XX	XX	XX	XX	XX	XX	XX	XX		XX	TW	TW	
Williams		XX		XX			XX	XX	XX		LW	LW	
Winget	XX	XX		XX	XX	XX	XX	XX		XX	SW		

	Date	Topic
Meeting 1	4/7	Safety Awareness
Meeting 2	4/14	We Know Beter!
Meeting 3	4/21	Safe Lifting Techniques
Meeting 4	4/28	Wearing Earplugs Properly
Meeting 5	5/5	A Flood Of Danger
Meeting 6	5/12	Are You Safe Or Just Lucky?
Meeting 7	5/19	Foot Protection

	Date	Topic
Meeting 8	5/26	Effective Hand Washing
Meeting 9	6/2	Importance Of Hydration
Meeting 10	6/9	First Aid Awareness
Meeting 11	6/16	Hearing Safety
Meeting 12	6/23	
Meeting 13	6/30	

Luke Reid Luke Reid

Brian Burzeridge Brian Burzeridge

Public Works 1st Quarter 2020 Safety Training

Date	4/7	4/14	4/21	4/28	5/5	5/12	5/19	5/26	6/2	6/9	6/16	6/23	6/30
Meeting #	1	2	3	4	5	6	7	8	9	10	11	12	13
Apps	XX	XX	XX	XX	XX	XX	XX	XX	XX	XX	XX	JA	
Arnold		XX		XX	XX	XX	XX	XX	XX	XX			
Bartok	XX	XX	XX	XX	XX	XX	XX	XX			XX	PB	
Bell	XX	XX	XX	XX	XX	XX	XX	XX	XX	XX		BB	
Cashman	XX	XX	XX	XX	XX	XX	XX	XX	XX	XX	XX	BC	
Clayton	XX	XX	XX	XX	XX	XX	XX						
Gardner													
Geary	XX	XX	XX	XX	XX	XX	XX	XX	XX	XX	XX	CG	
Gembala	XX	XX	XX	XX	XX	XX	XX	XX	XX	XX	XX	TG	
Hamilton													
Higgins	XX	XX	XX	XX	XX	XX	XX	XX	XX	XX	XX	KH	
Holder	XX	XX	XX	XX	XX	XX	XX	XX	XX	XX	XX	GH	
Klocek	XX	XX		XX	XX	XX	XX	XX		XX	XX		
Kolodziej		XX											
Kokinda	XX		XX	XX	XX	XX	XX		XX	XX	XX	PK	
Knesek													
Krestel	XX	XX	XX	XX	XX	XX	XX	XX		XX	XX	AK	
Matusik	XX	XX		XX	XX		XX		XX	XX	XX	SM	
Mouratides													
Peterson	XX	XX		XX	XX	XX	XX						
Pipta													
Pizzuto	XX	XX		XX	XX		XX	XX	XX	XX	XX	DP	
Plucinski	XX	XX	XX	XX	XX	XX	XX	XX	XX	XX	XX	BP	
Rastosky	XX	XX	XX	XX	XX	XX	XX	XX	XX	XX	XX	KR	
Ruzycki	XX	XX	XX	XX	XX		XX	XX	XX	XX	XX	BR	
Siple	XX	XX		XX	XX	XX	XX	XX	XX	XX	XX		
Slifko	XX	XX		XX	XX		XX	XX	XX	XX	XX	TS	
Teske								XX					
Westerlund	XX	XX	XX	XX	XX	XX	XX	XX		XX	XX	TW	
Williams		XX		XX			XX	XX	XX		XX	LW	
Winget	XX	XX		XX	XX	XX	XX	XX		XX	XX	SW	

	Date	Topic
Meeting 1	4/7	Safety Awareness
Meeting 2	4/14	We Know Beter!
Meeting 3	4/21	Safe Lifting Techniques
Meeting 4	4/28	Wearing Earplugs Properly
Meeting 5	5/5	A Flood Of Danger
Meeting 6	5/12	Are You Safe Or Just Lucky?
Meeting 7	5/19	Foot Protection

	Date	Topic
Meeting 8	5/26	Effective Hand Washing
Meeting 9	6/2	Importance Of Hydration
Meeting 10	6/9	First Aid Awareness
Meeting 11	6/16	Hearing Safety
Meeting 12	6/23	Knife Safety
Meeting 13	6/30	

Public Works 1st Quarter 2020 Safety Training

Date	7/7	7/14	7/21	7/28	8/4	8/11	8/18	8/25	9/1	9/8	9/15	9/22	9/29
Meeting #	1	2	3	4	5	6	7	8	9	10	11	12	13
Apps	XX	XX	XX	XX	JA								
Arnold	XX	XX	XX	XX	GA								
Bartok	XX	XX	XX	XX	PB								
Bell	XX	XX	XX	XX	BB								
Cashman	XX		XX	XX	BC								
Clayton													
Gardner	XX				GG								
Geary	XX	XX	XX	XX	CG								
Gembala	XX	XX	XX	XX									
Hamilton													
Higgins	XX	XX	XX	XX									
Holder	XX	XX		XX									
Klocek	XX				DK								
Kolodziej													
Kokinda		XX	XX	XX	PK								
Knesek													
Krestel	XX	XX	XX	XX	AK								
Matusik		XX	XX	XX	SM								
Mouratides													
Peterson													
Pipta													
Pizzuto		XX		XX	DP								
Plucinski	XX	XX	XX	XX									
Rastosky	XX			XX									
Ruzycki		XX	XX	XX	KR								
Siple	XX	XX	XX	XX	JS								
Slifko	XX	XX	XX	XX	TS								
Teske													
Westerlund	XX	XX		XX	TW								
Williams	XX	XX	XX	XX	LW								
Winget	XX	XX	XX	XX	SW								

	Date	Topic
Meeting 1	7/7	July - UV Safety Month
Meeting 2	7/14	Lifting Safely
Meeting 3	7/21	Give Yourself A Hand
Meeting 4	7/28	Cell Phone Distraction
Meeting 5	8/4	Step Ladder Safety
Meeting 6	8/11	
Meeting 7	8/18	

	Date	Topic
Meeting 8	8/25	
Meeting 9	9/1	
Meeting 10	9/8	
Meeting 11	9/15	
Meeting 12	9/22	
Meeting 13	9/29	

Brian Burzewski

Public Works 1st Quarter 2020 Safety Training

Date	7/7	7/14	7/21	7/28	8/4	8/11	8/18	8/25	9/1	9/8	9/15	9/22	9/29
Meeting #	1	2	3	4	5	6	7	8	9	10	11	12	13
Apps	XX	JA											
Arnold	XX	GA											
Bartok	XX	PB											
Bell	XX	BB											
Cashman	XX												
Clayton													
Gardner	XX												
Geary	XX	CG											
Gembala	XX	TG											
Hamilton													
Higgins	XX	KH											
Holder	XX	GH											
Klocek	XX												
Kolodziej													
Kokinda		PK											
Knesek													
Krestel	XX	AK											
Matusik		SM											
Mouratides													
Peterson		KP											
Pipta													
Pizzuto		DP											
Plucinski	XX	BP											
Rastosky	XX												
Ruzycki		BR											
Siple	XX	JS											
Slifko	XX	TS											
Teske													
Westerlund	XX	TW											
Williams	XX	LW											
Winget	XX												

	Date	Topic
Meeting 1	7/7	July - UV Safety Month
Meeting 2	7/14	Lifting Safely
Meeting 3	7/21	
Meeting 4	7/28	
Meeting 5	8/4	
Meeting 6	8/11	
Meeting 7	8/18	

	Date	Topic
Meeting 8	8/25	
Meeting 9	9/1	
Meeting 10	9/8	
Meeting 11	9/15	
Meeting 12	9/22	
Meeting 13	9/29	

Joseph Anderson

Brandon Avery

Luke Reid

Josh Bertoni

Brian Bruzzaniga

Public Works 1st Quarter 2020 Safety Training

Date	4/7	4/14	4/21	4/28	5/5	5/12	5/19	5/26	6/2	6/9	6/16	6/23	6/30
Meeting #	1	2	3	4	5	6	7	8	9	10	11	12	13
Apps	XX	XX	XX	XX	XX	XX	XX	XX	XX	XX	XX	XX	JA
Arnold		XX		XX	XX	XX	XX	XX	XX	XX			GA
Bartok	XX	XX	XX	XX	XX	XX	XX	XX			XX	XX	PB
Bell	XX	XX	XX	XX	XX	XX	XX	XX	XX	XX		XX	BB
Cashman	XX	XX	XX	XX	XX	XX	XX	XX	XX	XX	XX	XX	BC
Clayton	XX	XX	XX	XX	XX	XX	XX						
Gardner													
Geary	XX	XX	XX	XX	XX	XX	XX	XX	XX	XX	XX	XX	CG
Gembala	XX	XX	XX	XX	XX	XX	XX	XX	XX	XX	XX	XX	
Hamilton													
Higgins	XX	XX	XX	XX	XX	XX	XX	XX	XX	XX	XX	XX	KH
Holder	XX	XX	XX	XX	XX	XX	XX	XX	XX	XX	XX	XX	GH
Klocek	XX	XX		XX	XX	XX	XX	XX		XX	XX		
Kolodziej		XX											
Kokinda	XX		XX	XX	XX	XX	XX		XX	XX	XX	XX	PK
Knesek													
Krestel	XX	XX	XX	XX	XX	XX	XX	XX		XX	XX	XX	
Matusik	XX	XX		XX	XX		XX		XX	XX	XX	XX	JM
Mouratides													
Peterson	XX	XX		XX	XX	XX	XX						
Pipta													
Pizzuto	XX	XX		XX	XX		XX	XX	XX	XX	XX	XX	DP
Plucinski	XX	XX	XX	XX	XX	XX	XX	XX	XX	XX	XX	XX	BP
Rastosky	XX	XX	XX	XX	XX	XX	XX	XX	XX	XX	XX	XX	KR
Ruzycki	XX	XX	XX	XX	XX		XX	XX	XX	XX	XX	XX	BR
Siple	XX	XX		XX	XX	XX	XX	XX	XX	XX	XX		JS
Slifko	XX	XX		XX	XX		XX	XX	XX	XX	XX	XX	TS
Teske								XX					
Westerlund	XX	XX	XX	XX	XX	XX	XX	XX		XX	XX	XX	TW
Williams		XX		XX			XX	XX	XX		XX	XX	LW
Winget	XX	XX		XX	XX	XX	XX	XX		XX	XX	XX	SW

	Date	Topic
Meeting 1	4/7	Safety Awareness
Meeting 2	4/14	We Know Beter!
Meeting 3	4/21	Safe Lifting Techniques
Meeting 4	4/28	Wearing Earplugs Properly
Meeting 5	5/5	A Flood Of Danger
Meeting 6	5/12	Are You Safe Or Just Lucky?
Meeting 7	5/19	Foot Protection

	Date	Topic
Meeting 8	5/26	Effective Hand Washing
Meeting 9	6/2	Importance Of Hydration
Meeting 10	6/9	First Aid Awareness
Meeting 11	6/16	Hearing Safety
Meeting 12	6/23	Knife Safety
Meeting 13	6/30	4th Of July Fireworks Safety

Joshua Bertossi

Luke Reid

Joe Anderson

Public Works 1st Quarter 2020 Safety Training

Date	7/7	7/14	7/21	7/28	8/4	8/11	8/18	8/25	9/1	9/8	9/15	9/22	9/29
Meeting #	1	2	3	4	5	6	7	8	9	10	11	12	13
Apps	JA												
Arnold	GA												
Bartok	PB												
Bell	BB												
Cashman	BC												
Clayton													
Gardner	GG												
Geary	CG												
Gembala	TG												
Hamilton													
Higgins	KH												
Holder	GH												
Klocek	DK												
Kolodziej													
Kokinda													
Knesek													
Krestel	AK												
Matusik													
Mouratides													
Peterson													
Pipta													
Pizzuto													
Plucinski	BP												
Rastosky	KR												
Ruzycki													
Siple	JS												
Slifko	TS												
Teske													
Westerlund	TW												
Williams	LW												
Winget	SW												

	Date	Topic
Meeting 1	7/7	July - UV Safety Month
Meeting 2	7/14	
Meeting 3	7/21	
Meeting 4	7/28	
Meeting 5	8/4	
Meeting 6	8/11	
Meeting 7	8/18	

	Date	Topic
Meeting 8	8/25	
Meeting 9	9/1	
Meeting 10	9/8	
Meeting 11	9/15	
Meeting 12	9/22	
Meeting 13	9/29	

Brian Boweringe
Luke Reed
[illegible]

Joseph Anderson
Brandon Cocom

Public Works 1st Quarter 2020 Safety Training

Date	7/7	7/14	7/21	7/28	8/4	8/11	8/18	8/25	9/1	9/8	9/15	9/22	9/29
Meeting #	1	2	3	4	5	6	7	8	9	10	11	12	13
Apps	XX	XX	JA										
Arnold	XX	XX	GA										
Bartok	XX	XX	PB										
Bell	XX	XX	BB										
Cashman	XX		BC										
Clayton													
Gardner	XX												
Geary	XX	XX	CG										
Gembala	XX	XX	TG										
Hamilton													
Higgins	XX	XX	KH										
Holder	XX	XX											
Klocek	XX												
Kolodziej													
Kokinda		XX	PK										
Knesek													
Krestel	XX	XX	AK										
Matusik		XX	SM										
Mouratides													
Peterson													
Pipta													
Pizzuto		XX											
Plucinski	XX	XX	BP										
Rastosky	XX												
Ruzycki		XX	BR										
Siple	XX	XX	JS										
Slifko	XX	XX	TS										
Teske													
Westerlund	XX	XX											
Williams	XX	XX	LW										
Winget	XX	XX	SW										

	Date	Topic
Meeting 1	7/7	July - UV Safety Month
Meeting 2	7/14	Lifting Safely
Meeting 3	7/21	Give Yourself A Hand
Meeting 4	7/28	
Meeting 5	8/4	
Meeting 6	8/11	
Meeting 7	8/18	

	Date	Topic
Meeting 8	8/25	
Meeting 9	9/1	
Meeting 10	9/8	
Meeting 11	9/15	
Meeting 12	9/22	
Meeting 13	9/29	

Joshua Bertossi
Brian Bowerman
Brandon Cerrone
Luke Reid

Public Works 1st Quarter 2020 Safety Training

Date	7/7	7/14	7/21	7/28	8/4	8/11	8/18	8/25	9/1	9/8	9/15	9/22	9/29
Meeting #	1	2	3	4	5	6	7	8	9	10	11	12	13
Apps	XX	XX	XX	JA									
Arnold	XX	XX	XX	GA									
Bartok	XX	XX	XX	PB									
Bell	XX	XX	XX	BB									
Cashman	XX		XX	BC									
Clayton													
Gardner	XX												
Geary	XX	XX	XX	CG									
Gembala	XX	XX	XX	TG									
Hamilton													
Higgins	XX	XX	XX	KH									
Holder	XX	XX		GH									
Klocek	XX												
Kolodziej													
Kokinda		XX	XX	PK									
Knesek													
Krestel	XX	XX	XX	AK									
Matusik		XX	XX	SM									
Mouratides				JM									
Peterson													
Pipta													
Pizzuto		XX		DP									
Plucinski	XX	XX	XX	BP									
Rastosky	XX			KR									
Ruzycki		XX	XX	BR									
Siple	XX	XX	XX	JS									
Slifko	XX	XX	XX	TS									
Teske													
Westerlund	XX	XX		TW									
Williams	XX	XX	XX	LW									
Winget	XX	XX	XX	SW									

	Date	Topic
Meeting 1	7/7	July - UV Safety Month
Meeting 2	7/14	Lifting Safely
Meeting 3	7/21	Give Yourself A Hand
Meeting 4	7/28	Cell Phone Distraction
Meeting 5	8/4	
Meeting 6	8/11	
Meeting 7	8/18	

	Date	Topic
Meeting 8	8/25	
Meeting 9	9/1	
Meeting 10	9/8	
Meeting 11	9/15	
Meeting 12	9/22	
Meeting 13	9/29	

Joe Anderson Luke Reid

Brian Ruzycki

Public Works 1st Quarter 2020 Safety Training

Date	7/7	7/14	7/21	7/28	8/4	8/11	8/18	8/25	9/1	9/8	9/15	9/22	9/29
Meeting #	1	2	3	4	5	6	7	8	9	10	11	12	13
Apps	XX	XX	XX	XX	XX	JA							
Arnold	XX	XX	XX	XX	XX	GA							
Bartok	XX	XX	XX	XX	XX								
Bell	XX	XX	XX	XX	XX	BB							
Cashman	XX		XX	XX	XX								
Clayton						DC							
	XX												
Geary	XX	XX	XX	XX	XX	CG							
Gembala	XX	XX	XX	XX									
Hamilton													
Higgins	XX	XX	XX	XX		KH							
Holder	XX	XX		XX									
Klocek	XX				XX								
Kolodziej													
Kokinda		XX	XX	XX	XX	PK							
Knesek													
Krestel	XX	XX	XX	XX	XX	AK							
Matusik		XX	XX	XX	XX	SM							
Mouratides													
Pipta													
Pizzuto		XX		XX	XX								
Plucinski	XX	XX	XX	XX	XX								
Rastosky	XX			XX	XX	KR							
Ruzycki		XX	XX	XX		BR							
Siple	XX	XX	XX	XX	XX	JS							
Slifko	XX	XX	XX	XX	XX	TS							
Teske													
Westerlund	XX	XX		XX	XX	TW							
Williams	XX	XX	XX	XX	XX	LW							
Winget	XX	XX	XX	XX	XX								

	Date	Topic
Meeting 1	7/7	July - UV Safety Month
Meeting 2	7/14	Lifting Safely
Meeting 3	7/21	Give Yourself A Hand
Meeting 4	7/28	Cell Phone Distraction
Meeting 5	8/4	Step Ladder Safety
Meeting 6	8/11	Housekeeping
Meeting 7	8/18	

	Date	Topic
Meeting 8	8/25	
Meeting 9	9/1	
Meeting 10	9/8	
Meeting 11	9/15	
Meeting 12	9/22	
Meeting 13	9/29	

Public Works 1st Quarter 2020 Safety Training

Date	7/7	7/14	7/21	7/28	8/4	8/11	8/18	8/25	9/1	9/8	9/15	9/22	9/29
Meeting #	1	2	3	4	5	6	7	8	9	10	11	12	13
Apps	XX	XX	XX	XX	XX	XX	JA						
Arnold	XX	XX	XX	XX	XX	XX	GA						
Bartok	XX	XX	XX	XX	XX								
Bell	XX	XX	XX	XX	XX	XX	BB						
Cashman	XX		XX	XX	XX		BC						
Clayton						XX	DC						
	XX												
Geary	XX	XX	XX	XX	XX	XX	CG						
Gembala	XX	XX	XX	XX			TG						
Hamilton													
Higgins	XX	XX	XX	XX		XX	KH						
Holder	XX	XX		XX									
Klocek	XX				XX		DK						
Kolodziej													
Kokinda		XX	XX	XX	XX	XX	PK						
Knesek													
Krestel	XX	XX	XX	XX	XX	XX	AK						
Matusik		XX	XX	XX	XX	XX	SM						
Mouratides													
Pipta													
Pizzuto		XX		XX	XX		DP						
Plucinski	XX	XX	XX	XX	XX		BP						
Rastosky	XX			XX	XX	XX	KR						
Ruzycki		XX	XX	XX		XX	BR						
Siple	XX	XX	XX	XX	XX	XX	JS						
Slifko	XX	XX	XX	XX	XX	XX	TS						
Teske													
Westerlund	XX	XX		XX	XX	XX	TW						
Williams	XX	XX	XX	XX	XX	XX	LW						
Winget	XX	XX	XX	XX	XX		SW						

	Date	Topic
Meeting 1	7/7	July - UV Safety Month
Meeting 2	7/14	Lifting Safely
Meeting 3	7/21	Give Yourself A Hand
Meeting 4	7/28	Cell Phone Distraction
Meeting 5	8/4	Step Ladder Safety
Meeting 6	8/11	Housekeeping
Meeting 7	8/18	Safe Lifting Techniques

	Date	Topic
Meeting 8	8/25	
Meeting 9	9/1	
Meeting 10	9/8	
Meeting 11	9/15	
Meeting 12	9/22	
Meeting 13	9/29	

Public Works 1st Quarter 2020 Safety Training

Date	7/7	7/14	7/21	7/28	8/4	8/11	8/18	8/25	9/1	9/8	9/15	9/22	9/29
Meeting #	1	2	3	4	5	6	7	8	9	10	11	12	13
Apps	XX	XX	XX	XX	XX	XX	XX	JA					
Arnold	XX	XX	XX	XX	XX	XX	XX	GA					
Bartok	XX	XX	XX	XX	XX			PB					
Bell	XX	XX	XX	XX	XX	XX	XX	BB					
Cashman	XX		XX	XX	XX		XX						
Clayton						XX	XX	DC					
Gardner	XX												
Geary	XX	XX	XX	XX	XX	XX	XX	CG					
Gembala	XX	XX	XX	XX			XX	TG					
Hamilton													
Higgins	XX	XX	XX	XX		XX	XX	KH					
~~Holder~~	XX	XX		XX									
Klocek	XX				XX		XX	DK					
Kolodziej													
Kokinda		XX	XX	XX	XX	XX	XX	PK					
Knesek													
Krestel	XX	XX	XX	XX	XX	XX	XX	AK					
Matusik		XX	XX	XX	XX	XX	XX	SM					
Mouratides													
Pipta													
Pizzuto		XX		XX	XX		XX	DP					
Plucinski	XX	XX	XX	XX	XX		XX	BP					
Rastosky	XX			XX	XX	XX	XX	KR					
Ruzycki		XX	XX	XX		XX	XX	BR					
Siple	XX	XX	XX	XX	XX	XX	XX	JS					
Slifko	XX	XX	XX	XX	XX	XX	XX	TS					
Teske													
Westerlund	XX	XX		XX	XX	XX	XX	TW					
Williams	XX	XX	XX	XX	XX	XX	XX	LW					
Winget	XX	XX	XX	XX	XX								

	Date	Topic
Meeting 1	7/7	July - UV Safety Month
Meeting 2	7/14	Lifting Safely
Meeting 3	7/21	Give Yourself A Hand
Meeting 4	7/28	Cell Phone Distraction
Meeting 5	8/4	Step Ladder Safety
Meeting 6	8/11	Housekeeping
Meeting 7	8/18	Safe Lifting Techniques

	Date	Topic
Meeting 8	8/25	Right Tool For The Job?
Meeting 9	9/1	
Meeting 10	9/8	
Meeting 11	9/15	
Meeting 12	9/22	
Meeting 13	9/29	

Public Works 1st Quarter 2020 Safety Training

Date	7/7	7/14	7/21	7/28	8/4	8/11	8/18	8/25	9/1	9/8	9/15	9/22	9/29
Meeting #	1	2	3	4	5	6	7	8	9	10	11	12	13
Apps	XX	XX	XX	XX	XX	XX	XX	XX	AG				
Arnold	XX	XX	XX	XX	XX	XX	XX	XX					
Bartok	XX	XX	XX	XX	XX			XX					
Bell	XX	XX	XX	XX	XX	XX	XX	XX	BB				
Cashman	XX		XX	XX	XX		XX						
Clayton						XX	XX	XX	DC				
Gardner	XX												
Geary	XX	XX	XX	XX	XX	XX	XX	XX	CG				
Gembala	XX	XX	XX	XX			XX	XX	TG				
Hamilton													
Higgins	XX	XX	XX	XX		XX	XX	XX	KH				
Holder	XX	XX		XX									
Klocek	XX				XX		XX	XX	DK				
Kolodziej													
Kokinda		XX	XX	XX	XX	XX	XX	XX					
Knesek													
Krestel	XX	XX	XX	XX	XX	XX	XX	XX	AK				
Matusik		XX	XX	XX	XX	XX	XX	XX					
Mouratides													
Pipta													
Pizzuto		XX		XX	XX		XX	XX					
Plucinski	XX	XX	XX	XX	XX		XX	XX					
Rastosky	XX			XX	XX	XX	XX	XX	LR				
Ruzycki		XX	XX	XX		XX	XX	XX	RR				
Siple	XX	XX	XX	XX	XX	XX	XX	XX					
Slifko	XX	XX	XX	XX	XX	XX	XX	XX	TJS				
Teske													
Westerlund	XX	XX		XX	XX	XX	XX	XX	[illegible]				
Williams	XX	XX	XX	XX	XX	XX	XX	XX					
Winget	XX	XX	XX	XX	XX								

	Date	Topic
Meeting 1	7/7	July - UV Safety Month
Meeting 2	7/14	Lifting Safely
Meeting 3	7/21	Give Yourself A Hand
Meeting 4	7/28	Cell Phone Distraction
Meeting 5	8/4	Step Ladder Safety
Meeting 6	8/11	Housekeeping
Meeting 7	8/18	Safe Lifting Techniques

	Date	Topic
Meeting 8	8/25	Right Tool For The Job?
Meeting 9	9/1	Effective Hand Washing
Meeting 10	9/8	
Meeting 11	9/15	
Meeting 12	9/22	
Meeting 13	9/29	

Luke Reid
Joe Anderson
Brian Conway

Public Works 1st Quarter 2020 Safety Training

Date	7/7	7/14	7/21	7/28	8/4	8/11	8/18	8/25	9/1	9/8	9/15	9/22	9/29
Meeting #	1	2	3	4	5	6	7	8	9	10	11	12	13
Apps	XX	XX	XX	XX	XX	XX	XX	XX	XX	JA			
Arnold	XX	XX	XX	XX	XX	XX	XX	XX		-			
Bartok	XX	XX	XX	XX	XX			XX	XX	PB			
Bell	XX	XX	XX	XX	XX	XX	XX	XX	XX				
Cashman	XX		XX	XX	XX		XX						
Clayton						XX	XX	XX	XX	DL			
Gardner	XX												
Geary	XX	XX	XX	XX	XX	XX	XX	XX	XX	CG			
Gembala	XX	XX	XX	XX			XX	XX	XX				
Hamilton													
Higgins	XX	XX	XX	XX		XX	XX	XX	XX	~~KH~~			
Holder	XX	XX		XX									
Klocek	XX				XX		XX	XX	XX	DK			
Kolodziej													
Kokinda		XX	XX	XX	XX	XX	XX	XX		PK			
Knesek													
Krestel	XX	XX	XX	XX	XX	XX	XX	XX	XX	AK			
Matusik		XX	XX	XX	XX	XX	XX	XX		SM			
Mouratides													
Pipta													
Pizzuto		XX		XX	XX		XX	XX		[illegible]			
Plucinski	XX	XX	XX	XX	XX		XX	XX					
Rastosky	XX			XX	XX	XX	XX	XX	XX	KR			
Ruzycki		XX	XX	XX		XX	XX	XX	XX	~~TR~~			
Siple	XX	XX	XX	XX	XX	XX	XX	XX					
Slifko	XX	XX	XX	XX	XX	XX	XX	XX	XX	VJ			
Teske													
Westerlund	XX	XX		XX	XX	XX	XX	XX	XX	TW			
Williams	XX	XX	XX	XX	XX	XX	XX	XX					
Winget	XX	XX	XX	XX	XX								

	Date	Topic
Meeting 1	7/7	July - UV Safety Month
Meeting 2	7/14	Lifting Safely
Meeting 3	7/21	Give Yourself A Hand
Meeting 4	7/28	Cell Phone Distraction
Meeting 5	8/4	Step Ladder Safety
Meeting 6	8/11	Housekeeping
Meeting 7	8/18	Safe Lifting Techniques

	Date	Topic
Meeting 8	8/25	Right Tool For The Job?
Meeting 9	9/1	Effective Hand Washing
Meeting 10	9/8	Slips And Falls
Meeting 11	9/15	
Meeting 12	9/22	
Meeting 13	9/29	

Public Works 1st Quarter 2020 Safety Training

Date	7/7	7/14	7/21	7/28	8/4	8/11	8/18	8/25	9/1	9/8	9/15	9/22	9/29
Meeting #	1	2	3	4	5	6	7	8	9	10	11	12	13
Apps	XX	XX	XX	XX	XX	XX	XX	XX	XX	XX			
Arnold	XX	XX	XX	XX	XX	XX	XX	XX					
Bartok	XX	XX	XX	XX	XX			XX	XX	XX			
Bell	XX	XX	XX	XX	XX	XX	XX	XX	XX				
Cashman	XX		XX	XX	XX		XX						
Clayton						XX	XX	XX	XX	XX			
Gardner	XX												
Geary	XX	XX	XX	XX	XX	XX	XX	XX	XX	XX			
Gembala	XX	XX	XX	XX			XX	XX	XX				
Hamilton													
Higgins	XX	XX	XX	XX		XX	XX	XX	XX	XX			
Holder	XX	XX		XX									
Klocek	XX				XX		XX	XX	XX	XX			
Kolodziej													
Kokinda		XX	XX	XX	XX	XX	XX	XX		XX			
Knesek													
Krestel	XX	XX	XX	XX	XX	XX	XX	XX	XX				
Matusik		XX	XX	XX	XX	XX	XX	XX					
Mouratides													
Pipta													
Pizzuto		XX		XX	XX		XX	XX		XX			
Plucinski	XX	XX	XX	XX	XX		XX	XX					
Rastosky	XX			XX	XX	XX	XX	XX	XX	XX			
Ruzycki		XX	XX	XX		XX	XX	XX	XX	XX			
Siple	XX	XX	XX	XX	XX	XX	XX	XX					
Slifko	XX	XX	XX	XX	XX	XX	XX	XX	XX	XX			
Teske													
Westerlund	XX	XX		XX	XX	XX	XX	XX	XX	XX			
Williams	XX	XX	XX	XX	XX	XX	XX	XX					
Winget	XX	XX	XX	XX	XX								

	Date	Topic
Meeting 1	7/7	July - UV Safety Month
Meeting 2	7/14	Lifting Safely
Meeting 3	7/21	Give Yourself A Hand
Meeting 4	7/28	Cell Phone Distraction
Meeting 5	8/4	Step Ladder Safety
Meeting 6	8/11	Housekeeping
Meeting 7	8/18	Safe Lifting Techniques

	Date	Topic
Meeting 8	8/25	Right Tool For The Job?
Meeting 9	9/1	Effective Hand Washing
Meeting 10	9/8	Slips And Falls
Meeting 11	9/15	Flammable Liquids
Meeting 12	9/22	
Meeting 13	9/29	

Public Works 1st Quarter 2020 Safety Training

Date	7/7	7/14	7/21	7/28	8/4	8/11	8/18	8/25	9/1	9/8	9/15	9/22	9/29
Meeting #	1	2	3	4	5	6	7	8	9	10	11	12	13
Apps	XX	XX	XX	XX	XX	XX	XX	XX	XX	XX	XX	[illegible]	
Arnold	XX	XX	XX	XX	XX	XX	XX	XX					
Bartok	XX	XX	XX	XX	XX			XX	XX	XX	XX	[illegible]	
Bell	XX	XX	XX	XX	XX	XX	XX	XX	XX		XX	BeB	
Cashman	XX		XX	XX	XX		XX						
Clayton						XX	XX	XX	XX	XX		DC	
Gardner	XX												
Geary	XX	XX	XX	XX	XX	XX	XX	XX	XX	XX	XX	CG	
Gembala	XX	XX	XX	XX			XX	XX	XX		XX	[illegible]	
Hamilton													
Higgins	XX	XX	XX	XX		XX	XX	XX	XX	XX	XX	KH	
Holder	XX	XX		XX									
Klocek	XX				XX		XX	XX	XX	XX			
Kolodziej													
Kokinda		XX	XX	XX	XX	XX	XX	XX		XX	XX		
Knesek													
Krestel	XX	XX	XX	XX	XX	XX	XX	XX	XX		XX	AK	
Matusik		XX	XX	XX	XX	XX	XX	XX			XX		
Mouratides													
Pipta													
Pizzuto		XX		XX	XX		XX	XX		XX			
Plucinski	XX	XX	XX	XX	XX		XX	XX					
Rastosky	XX			XX	XX	XX	XX	XX	XX	XX	XX	KR	
Ruzycki		XX	XX	XX		XX	XX	XX	XX	XX	XX	BR	
Siple	XX	XX	XX	XX	XX	XX	XX	XX					
Slifko	XX	XX	XX	XX	XX	XX	XX	XX	XX	XX	XX	TJ	
Teske													
Westerlund	XX	XX		XX	XX	XX	XX	XX	XX	XX	XX	TW	
Williams	XX	XX	XX	XX	XX	XX	XX	XX					
Winget	XX	XX	XX	XX	XX								

	Date	Topic
Meeting 1	7/7	July - UV Safety Month
Meeting 2	7/14	Lifting Safely
Meeting 3	7/21	Give Yourself A Hand
Meeting 4	7/28	Cell Phone Distraction
Meeting 5	8/4	Step Ladder Safety
Meeting 6	8/11	Housekeeping
Meeting 7	8/18	Safe Lifting Techniques

	Date	Topic
Meeting 8	8/25	Right Tool For The Job?
Meeting 9	9/1	Effective Hand Washing
Meeting 10	9/8	Slips And Falls
Meeting 11	9/15	Flammable Liquids
Meeting 12	9/22	Grill Safety
Meeting 13	9/29	

Brian Arzan

Joseph Anderson

Luke Reid

Public Works 1st Quarter 2020 Safety Training

Date	7/7	7/14	7/21	7/28	8/4	8/11	8/18	8/25	9/1	9/8	9/15	9/22	9/29
Meeting #	1	2	3	4	5	6	7	8	9	10	11	12	13
Apps	XX	XX	XX	XX	XX	XX	XX	XX	XX	XX	XX	XX	[illegible]
Arnold	XX	XX	XX	XX	XX	XX	XX	XX					
Bartok	XX	XX	XX	XX	XX			XX	XX	XX	XX	XX	[illegible]
Bell	XX	XX	XX	XX	XX	XX	XX	XX	XX		XX	XX	
Cashman	XX		XX	XX	XX		XX						[illegible]
Clayton						XX	XX	XX	XX	XX		XX	DC
Gardner	XX												
Geary	XX	XX	XX	XX	XX	XX	XX	XX	XX	XX	XX	XX	CG
Gembala	XX	XX	XX	XX			XX	XX	XX		XX	XX	[illegible]
Hamilton													
Higgins	XX	XX	XX	XX		XX	XX	XX	XX	XX	XX	XX	
Holder	XX	XX		XX									
Klocek	XX				XX		XX	XX	XX	XX			
Kolodziej													MK
Kokinda		XX	XX	XX	XX	XX	XX	XX		XX	XX		PK
Knesek													
Krestel	XX	XX	XX	XX	XX	XX	XX	XX	XX		XX	XX	AK
Matusik		XX	XX	XX	XX	XX	XX	XX	SM	SM	XX		SM
Mouratides													
Pipta													
Pizzuto		XX		XX	XX		XX	XX		XX			[illegible]
Plucinski	XX	XX	XX	XX	XX		XX	XX					
Rastosky	XX			XX	XX	XX	XX	XX	XX	XX	XX	XX	KR
Ruzycki		XX	XX	XX		XX	XX	XX	XX	XX	XX	XX	[illegible]
Siple	XX	XX	XX	XX	XX	XX	XX	XX					[illegible]
Slifko	XX	XX	XX	XX	XX	XX	XX	XX	XX	XX	XX	XX	TS
Teske													BT
Westerlund	XX	XX		XX	XX	XX	XX	XX	XX	XX	XX	XX	TW
Williams	XX	XX	XX	XX	XX	XX	XX	XX					
Winget	XX	XX	XX	XX	XX								

	Date	Topic
Meeting 1	7/7	July - UV Safety Month
Meeting 2	7/14	Lifting Safely
Meeting 3	7/21	Give Yourself A Hand
Meeting 4	7/28	Cell Phone Distraction
Meeting 5	8/4	Step Ladder Safety
Meeting 6	8/11	Housekeeping
Meeting 7	8/18	Safe Lifting Techniques

	Date	Topic
Meeting 8	8/25	Right Tool For The Job?
Meeting 9	9/1	Effective Hand Washing
Meeting 10	9/8	Slips And Falls
Meeting 11	9/15	Flammable Liquids
Meeting 12	9/22	Grill Safety
Meeting 13	9/29	Food Safety Month

Luke Reid
Joseph Anderson

Public Works 1st Quarter 2020 Safety Training

Date	10/6	10/13	10/20	10/27	11/3	11/10	11/17	11/24	12/1	12/8	12/15	12/22	12/29
Meeting #	1	2	3	4	5	6	7	8	9	10	11	12	13
Apps	[illegible]												
Arnold	GA												
Bartok	[illegible]												
Bell													
Cashman	BC												
Clayton	DC												
Gardner													
Geary	[illegible]												
Gembala	[illegible]												
Hamilton													
Higgins	[illegible]												
Holder													
Klocek	DK												
Kolodziej	MK												
Kokinda	PK												
Knesek													
Krestel	AK												
Matusik	JM												
Mouratides													
Pipta													
Pizzuto	NMP												
Plucinski	[illegible]												
Insert Rastosky *	KR												
Ruzycki	[illegible]												
Siple	[illegible]												
Slifko	[illegible]												
Teske													
Westerlund													
Williams													
Winget	[illegible]												

Meeting 1	10/6	Election Day Safety
Meeting 2	10/13	
Meeting 3	10/20	
Meeting 4	10/27	
Meeting 5	11/3	
Meeting 6	11/10	
Meeting 7	11/17	

Meeting 8	11/24	
Meeting 9	12/1	
Meeting 10	12/8	
Meeting 11	12/15	
Meeting 12	12/22	
Meeting 13	12/29	

Public Works 1st Quarter 2020 Safety Training

Date	10/6	10/13	10/20	10/27	11/3	11/10	11/17	11/24	12/1	12/8	12/15	12/22	12/29
Meeting #	1	2	3	4	5	6	7	8	9	10	11	12	13
Apps	XX												
Arnold	XX												
Bartok	XX	PB											
Bell	XX	BB											
Cashman	XX												
Clayton	XX	DC											
Gardner	XX	SG											
Geary	XX												
Gembala	XX												
Hamilton	XX												
Higgins	XX												
Holder	XX												
Klocek	XX	DK											
Kolodziej	XX	MK											
Kokinda	XX	PK											
Knesek	XX												
Krestel	XX												
Matusik	XX	SM											
Mouratides	XX												
Pipta	XX												
Pizzuto	XX												
Plucinski	XX												
Rastosky	XX	KR											
Ruzycki	XX												
Siple	XX												
Slifko	XX	TJ											
Teske	XX												
Westerlund	XX	TW											
Williams	XX												
Winget	XX	SW											

Meeting 1	10/6	Election Day Safety
Meeting 2	10/13	Housekeeping
Meeting 3	10/20	
Meeting 4	10/27	
Meeting 5	11/3	
Meeting 6	11/10	
Meeting 7	11/17	

Meeting 8	11/24	
Meeting 9	12/1	
Meeting 10	12/8	
Meeting 11	12/15	
Meeting 12	12/22	
Meeting 13	12/29	

Public Works 1st Quarter 2020 Safety Training

Date	10/6	10/13	10/20	10/27	11/3	11/10	11/17	11/24	12/1	12/8	12/15	12/22	12/29
Meeting #	1	2	3	4	5	6	7	8	9	10	11	12	13
Apps	XX	XX											
Arnold	XX	XX											
Bartok	XX	XX											
Bell	XX	XX											
Cashman	XX	XX	BJC										
Clayton	XX	XX	DC										
Gardner	XX	XX											
Geary	XX	XX	CG										
Gembala	XX	XX											
Hamilton	XX	XX											
Higgins	XX	XX											
Holder	XX												
Klocek	XX	XX											
Kolodziej	XX	XX											
Kokinda	XX	XX	DK										
Knesek	XX												
Krestel	XX		AK										
Matusik	XX	XX	SM										
Mouratides	XX	XX											
Pipta	XX												
Pizzuto	XX	XX											
Plucinski	XX	XX											
Rastosky	XX	XX											
Ruzycki	XX	XX											
Siple	XX	XX											
Slifko	XX	XX											
Teske	XX												
Westerlund	XX	XX											
Williams	XX												
Winget	XX	XX											

Meeting 1	10/6	Election Day Safety
Meeting 2	10/13	Housekeeping
Meeting 3	10/20	Foot Protection
Meeting 4	10/27	
Meeting 5	11/3	
Meeting 6	11/10	
Meeting 7	11/17	

Meeting 8	11/24	
Meeting 9	12/1	
Meeting 10	12/8	
Meeting 11	12/15	
Meeting 12	12/22	
Meeting 13	12/29	

Brian Curran

Joseph Anderson

Luke Reid

Public Works 1st Quarter 2020 Safety Training

Date	10/6	10/13	10/20	10/27	11/3	11/10	11/17	11/24	12/1	12/8	12/15	12/22	12/29
Meeting #	1	2	3	4	5	6	7	8	9	10	11	12	13
Apps	XX	XX	XX	JA									
Arnold	XX	XX		GA									
Bartok	XX	XX		[illegible]									
Bell	XX	XX		BLB									
Cashman	XX	XX	XX	B.C.									
Clayton	XX	XX	XX	DC									
Gardner	XX	XX		SG									
Geary	XX	XX	XX	CG									
Gembala	XX	XX	XX	JM									
Hamilton	XX	XX											
Higgins	XX	XX	XX	KRH									
Holder	XX												
Klocek	XX	XX		DK									
Kolodziej	XX	XX	XX	MK									
Kokinda	XX	XX	XX	PK									
Knesek	XX												
Krestel	XX		XX										
Matusik	XX	XX	XX										
Mouratides	XX	XX	XX	[illegible]									
Pipta	XX												
Pizzuto	XX	XX	XX	[illegible]									
Plucinski	XX	XX	XX	[illegible]									
Rastosky	XX	XX		KR									
Ruzycki	XX	XX	XX	[illegible]									
Siple	XX	XX	XX	[illegible]									
Slifko	XX	XX		TS									
Teske	XX												
Westerlund	XX	XX		TW									
Williams	XX												
Winget	XX	XX		[illegible]									

Meeting 1	10/6	Election Day Safety
Meeting 2	10/13	Housekeeping
Meeting 3	10/20	Foot Protection
Meeting 4	10/27	Halloween Safety
Meeting 5	11/3	
Meeting 6	11/10	
Meeting 7	11/17	

Meeting 8	11/24	
Meeting 9	12/1	
Meeting 10	12/8	
Meeting 11	12/15	
Meeting 12	12/22	
Meeting 13	12/29	

Luke Reid

Public Works 1st Quarter 2020 Safety Training

Date	10/6	10/13	10/20	10/27	11/3	11/10	11/17	11/24	12/1	12/8	12/15	12/22	12/29
Meeting #	1	2	3	4	5	6	7	8	9	10	11	12	13
Apps	XX	XX	XX	XX									
Arnold	XX	XX		XX									
Bartok	XX	XX		XX									
Bell	XX	XX		XX									
Cashman	XX	XX	XX	XX									
Clayton	XX	XX	XX	XX	DC								
Gardner	XX	XX		XX									
Geary	XX	XX	XX	XX	CG								
Gembala	XX	XX	XX	XX									
Hamilton	XX	XX											
Higgins	XX	XX	XX	XX									
Holder	XX												
Klocek	XX	XX		XX									
Kolodziej	XX	XX	XX	XX	MC								
Kokinda	XX	XX	XX	XX	PK								
Knesek	XX												
Krestel	XX		XX		AK								
Matusik	XX	XX	XX		JM								
Mouratides	XX	XX	XX	XX									
Pipta	XX												
Pizzuto	XX	XX	XX	XX									
Plucinski	XX	XX	XX	XX									
Rastosky	XX	XX		XX									
Ruzycki	XX	XX	XX	XX									
Siple	XX	XX	XX	XX									
Slifko	XX	XX		XX									
Teske	XX												
Westerlund	XX	XX		XX									
Williams	XX												
Winget	XX	XX		XX									

Meeting 1	10/6	Election Day Safety
Meeting 2	10/13	Housekeeping
Meeting 3	10/20	Foot Protection
Meeting 4	10/27	Halloween Safety
Meeting 5	11/3	Lifting Safely
Meeting 6	11/10	
Meeting 7	11/17	

Meeting 8	11/24	
Meeting 9	12/1	
Meeting 10	12/8	
Meeting 11	12/15	
Meeting 12	12/22	
Meeting 13	12/29	

Public Works 1st Quarter 2020 Safety Training

Date	10/6	10/13	10/20	10/27	11/3	11/10	11/17	11/24	12/1	12/8	12/15	12/22	12/29
Meeting #	1	2	3	4	5	6	7	8	9	10	11	12	13
Apps	XX	XX	XX	XX	XX								
Arnold	XX	XX		XX									
Bartok	XX	XX		XX									
Bell	XX	XX		XX									
Cashman	XX	XX	XX	XX	XX								
Clayton	XX	XX	XX	XX	XX	DC							
Gardner	XX	XX		XX									
Geary	XX	XX	XX	XX	XX	CG							
Gembala	XX	XX	XX	XX	XX								
Hamilton	XX	XX											
Higgins	XX	XX	XX	XX									
Holder	XX												
Klocek	XX	XX		XX									
Kolodziej	XX	XX	XX	XX	XX	MK							
Kokinda	XX	XX	XX	XX	XX								
Knesek	XX												
Krestel	XX		XX		XX	AK							
Matusik	XX	XX	XX		XX								
Mouratides	XX	XX	XX	XX									
Pipta	XX												
Pizzuto	XX	XX	XX	XX									
Plucinski	XX	XX	XX	XX	XX								
~~Rastosky~~ Rastovsky	XX	XX		XX		KR							
Ruzycki	XX	XX	XX	XX	XX								
Siple	XX	XX	XX	XX	XX								
Slifko	XX	XX		XX									
Teske	XX												
Westerlund	XX	XX		XX		TW							
Williams	XX												
Winget	XX	XX		XX									

Meeting 1	10/6	Election Day Safety
Meeting 2	10/13	Housekeeping
Meeting 3	10/20	Foot Protection
Meeting 4	10/27	Halloween Safety
Meeting 5	11/3	Lifting Safely
Meeting 6	11/10	Step Ladder Safety
Meeting 7	11/17	

Meeting 8	11/24	
Meeting 9	12/1	
Meeting 10	12/8	
Meeting 11	12/15	
Meeting 12	12/22	
Meeting 13	12/29	

Public Works 1st Quarter 2020 Safety Training

Date	10/6	10/13	10/20	10/27	11/3	11/10	11/17	11/24	12/1	12/8	12/15	12/22	12/29
Meeting #	1	2	3	4	5	6	7	8	9	10	11	12	13
Apps	XX	XX	XX	XX	XX	XX							
Arnold	XX	XX		XX			GA	GA					
Bartok	XX	XX		XX									
Bell	XX	XX		XX									
Cashman	XX	XX	XX	XX	XX		BC.	BC.					
Clayton	XX	XX	XX	XX	XX	XX	DC	DC					
Gardner	XX	XX		XX									
Geary	XX	XX	XX	XX	XX	XX	CG	CG					
Gembala	XX	XX	XX	XX	XX	XX							
Hamilton	XX	XX											
Higgins	XX	XX	XX	XX									
Holder	XX												
Klocek	XX	XX		XX		XX							
Kolodziej	XX	XX	XX	XX	XX		MC	MC					
Kokinda	XX	XX	XX	XX	XX		PK	PK					
Knesek	XX												
Krestel	XX		XX		XX	XX	AK	AK					
Matusik	XX	XX	XX		XX			SM					
Mouratides	XX	XX	XX	XX									
Pipta	XX												
Pizzuto	XX	XX	XX	XX									
Plucinski	XX	XX	XX	XX	XX								
Rastosky	XX	XX		XX		XX							
Ruzycki	XX	XX	XX	XX	XX								
Siple	XX	XX	XX	XX	XX								
Slifko	XX	XX		XX									
Teske	XX												
Westerlund	XX	XX		XX		XX	TW	TW					
Williams	XX												
Winget	XX	XX		XX									

Meeting 1	10/6	Election Day Safety
Meeting 2	10/13	Housekeeping
Meeting 3	10/20	Foot Protection
Meeting 4	10/27	Halloween Safety
Meeting 5	11/3	Lifting Safely
Meeting 6	11/10	Step Ladder Safety
Meeting 7	11/17	Rule of Confined Space

Meeting 8	11/24	Danger In Feeding Machines
Meeting 9	12/1	
Meeting 10	12/8	
Meeting 11	12/15	
Meeting 12	12/22	
Meeting 13	12/29	

Luke Reid
Brandon Carson
Joseph Anderson

Public Works 1st Quarter 2020 Safety Training

Date	10/6	10/13	10/20	10/27	11/3	11/10	11/17	11/24	12/1	12/8	12/15	12/22	12/29
Meeting #	1	2	3	4	5	6	7	8	9	10	11	12	13
Apps	XX	XX	XX	XX	XX	XX	XX	XX					
Arnold	XX	XX		XX			XX	XX	GA	GA			
Bartok	XX	XX		XX									
Bell	XX	XX		XX					BKB	BKB			
Cashman	XX	XX	XX	XX	XX		XX	XX	BC	BC			
Clayton	XX	XX	XX	XX	XX	XX	XX	XX	DC	DC			
Gardner	XX	XX		XX									
Geary	XX	XX	XX	XX	XX	XX	XX	XX	CG	CG			
Gembala	XX	XX	XX	XX	XX	XX	XX	XX					
Hamilton	XX	XX											
Higgins	XX	XX	XX	XX			XX	XX					
Holder	XX												
Klocek	XX	XX		XX		XX							
Kolodziej	XX	XX	XX	XX	XX		XX	XX	MK	MK			
Kokinda	XX	XX	XX	XX	XX		XX	XX	PK	PK			
Knesek	XX												
Krestel	XX		XX		XX	XX	XX	XX	AK	AK			
Matusik	XX	XX	XX		XX		XX	XX					
Mouratides	XX	XX	XX	XX									
Pipta	XX								MP	MP			
Pizzuto	XX	XX	XX	XX									
Plucinski	XX	XX	XX	XX	XX								
~~Rastosky~~ Rastovsky	XX	XX		XX		XX	XX	XX	TR	TR			
Ruzycki	XX	XX	XX	XX	XX		XX	XX					
Siple	XX	XX	XX	XX	XX		XX	XX					
Slifko	XX	XX		XX									
Teske	XX												
Westerlund	XX	XX		XX		XX	XX	XX					
Williams	XX												
Winget	XX	XX		XX					SW	SW			

Meeting 1	10/6	Election Day Safety
Meeting 2	10/13	Housekeeping
Meeting 3	10/20	Foot Protection
Meeting 4	10/27	Halloween Safety
Meeting 5	11/3	Lifting Safely
Meeting 6	11/10	Step Ladder Safety
Meeting 7	11/17	Rule of Confined Space

Meeting 8	11/24	Danger In Feeding Machines
Meeting 9	12/1	Frigid Temps Safety Pt1
Meeting 10	12/8	Frigid Temps Safety Pt2
Meeting 11	12/15	
Meeting 12	12/22	
Meeting 13	12/29	

Joseph Anderson

Luke Reid

Public Works 1st Quarter 2020 Safety Training

Date	10/6	10/13	10/20	10/27	11/3	11/10	11/17	11/24	12/1	12/8	12/15	12/22	12/29
Meeting #	1	2	3	4	5	6	7	8	9	10	11	12	13
Apps	XX	XX	XX	XX	XX	XX	XX	XX	XX	XX			
Arnold	XX	XX		XX			XX	XX	XX	XX	GA	GA	GA
Bartok	XX	XX		XX					XX	XX			
Bell	XX	XX		XX					XX	XX			
Cashman	XX	XX	XX	XX	XX		XX	XX	XX	XX			
Clayton	XX	XX	XX	XX	XX	XX	XX	XX	XX	XX	DC	DC	DC
Gardner	XX	XX		XX									
Geary	XX	XX	XX	XX	XX	XX	XX	XX	XX	XX	CG	CG	CG
Gembala	XX	XX	XX	XX	XX	XX	XX	XX					
Hamilton	XX	XX											
Higgins	XX	XX	XX	XX			XX	XX					
Holder	XX												
Klocek	XX	XX		XX		XX					DK	DK	DK
Kolodziej	XX	XX	XX	XX	XX		XX	XX	XX	XX	MK	MK	MK
Kokinda	XX	XX	XX	XX	XX		XX	XX	XX	XX	PK	PK	PK
Knesek	XX												
Krestel	XX		XX		XX	XX	XX	XX	XX	XX	AK	AK	AK
Matusik	XX	XX	XX		XX		XX	XX			SM	SM	SM
Mouratides	XX	XX	XX	XX					XX	XX			
Pipta	XX								XX	XX			
Pizzuto	XX	XX	XX	XX									
Plucinski	XX	XX	XX	XX	XX				XX	XX			
Rastovsky	XX	XX		XX		XX	XX	XX	XX	XX	JR	JR	JR
Ruzycki	XX	XX	XX	XX	XX		XX	XX	XX	XX	BR	BR	BR
Siple	XX	XX	XX	XX	XX		XX	XX	XX	XX			
Slifko	XX	XX		XX							TS	TS	TS
Teske	XX												
Westerlund	XX	XX		XX		XX	XX	XX	XX	XX	TW	TW	TW
Williams	XX												
Winget	XX	XX		XX					XX	XX	SW	SW	SW

Meeting 1	10/6	Election Day Safety
Meeting 2	10/13	Housekeeping
Meeting 3	10/20	Foot Protection
Meeting 4	10/27	Halloween Safety
Meeting 5	11/3	Lifting Safely
Meeting 6	11/10	Step Ladder Safety
Meeting 7	11/17	Rule of Confined Space

Meeting 8	11/24	Danger In Feeding Machines
Meeting 9	12/1	Frigid Temps Safety Pt1
Meeting 10	12/8	Frigid Temps Safety Pt2
Meeting 11	12/15	New Year's Eve Safety
Meeting 12	12/22	Cold Stress
Meeting 13	12/29	The Danger Zone-Office

Public Works 1st Quarter 2020 Safety Training

Date	10/6	10/13	10/20	10/27	11/3	11/10	11/17	11/24	12/1	12/8	12/15	12/22	12/29
Meeting #	1	2	3	4	5	6	7	8	9	10	11	12	13
Apps	XX	XX	XX	XX	XX	XX	XX	XX	XX	XX	XX	XX	XX
Arnold	XX	XX		XX			XX	XX	XX	XX	XX	XX	XX
Bartok	XX	XX		XX					XX	XX	XX	XX	XX
Bell	XX	XX		XX					XX	XX			
Cashman	XX	XX	XX	XX	XX		XX	XX	XX	XX	XX	XX	XX
Clayton	XX	XX	XX	XX	XX	XX	XX	XX	XX	XX	XX	XX	XX
Gardner	XX	XX		XX									
Geary	XX	XX	XX	XX	XX	XX	XX	XX	XX	XX	XX	XX	XX
Gembala	XX	XX	XX	XX	XX	XX	XX	XX			XX	XX	XX
Hamilton	XX	XX											
Higgins	XX	XX	XX	XX			XX	XX			XX	XX	XX
Holder	XX												
Klocek	XX	XX		XX		XX					XX	XX	XX
Kolodziej	XX	XX	XX	XX	XX		XX	XX	XX	XX	XX	XX	XX
Kokinda	XX	XX	XX	XX	XX		XX	XX	XX	XX	XX	XX	XX
Knesek	XX												
Krestel	XX		XX		XX	XX	XX	XX	XX	XX	XX	XX	XX
Matusik	XX	XX	XX		XX		XX	XX			XX	XX	XX
Mouratides	XX	XX	XX	XX					XX	XX	XX	XX	XX
Pipta	XX								XX	XX			
Pizzuto	XX	XX	XX	XX							XX	XX	XX
Plucinski	XX	XX	XX	XX	XX				XX	XX	XX	XX	XX
Rastovsky	XX	XX		XX		XX	XX	XX	XX	XX	XX	XX	XX
Ruzycki	XX	XX	XX	XX	XX		XX	XX	XX	XX	XX	XX	XX
Siple	XX	XX	XX	XX	XX		XX	XX	XX	XX	XX	XX	XX
Slifko	XX	XX		XX							XX	XX	XX
Teske	XX												
Westerlund	XX	XX		XX		XX	XX	XX	XX	XX	XX	XX	X
Williams	XX												
Winget	XX	XX		XX					XX	XX	XX	XX	XX

Meeting 1	10/6	Election Day Safety
Meeting 2	10/13	Housekeeping
Meeting 3	10/20	Foot Protection
Meeting 4	10/27	Halloween Safety
Meeting 5	11/3	Lifting Safely
Meeting 6	11/10	Step Ladder Safety
Meeting 7	11/17	Rule of Confined Space

Meeting 8	11/24	Danger In Feeding Machines
Meeting 9	12/1	Frigid Temps Safety Pt1
Meeting 10	12/8	Frigid Temps Safety Pt2
Meeting 11	12/15	New Year's Eve Safety
Meeting 12	12/22	Cold Stress
Meeting 13	12/29	The Danger Zone-Office

Public Works 2021 Safety Training

Date	1/5	1/12	1/19	1/26	2/2	2/9	2/16	2/23	3/2	3/9	3/16	3/23	3/30
Meeting #	1	2	3	4	5	6	7	8	9	10	11	12	13
Anderson			xx	xx	xx	xx			xx		xx	xx	xx
Apps	xx	xx	xx	xx	xx	xx	xx	xx	xx	xx	xx	xx	xx
Arnold	xx	xx		xx	xx					xx	xx	xx	xx
Bartok	xx	xx		xx		xx		xx		xx	xx	xx	
Bell		xx		xx	xx		xx	xx	xx		xx	xx	xx
Cashman	xx	xx	xx	xx	xx	xx	xx	xx		xx			
Clayton	xx	xx		xx	xx		xx	xx		xx	xx	xx	xx
Curran	xx	xx							xx	xx	xx		xx
Gardner										xx	xx		
Geary	xx	xx	xx	xx	xx	xx	xx	xx	xx	xx	xx	xx	xx
Gembala	xx	xx	xx	xx	xx		xx	xx	xx				
Hamilton													xx
Higgins	xx	xx		xx	xx		xx	xx	xx	xx	xx		xx
Klocek	xx	xx	xx	xx	xx					xx	xx	xx	xx
Kolodziej	xx	xx		xx	xx		xx	xx	xx	xx	xx		xx
Kokinda	xx	xx	xx	xx	xx					xx	xx	xx	xx
Knesek													
Krestel	xx	xx	xx	xx	xx	xx	xx	xx	xx	xx		xx	xx
Massey													xx
Matusik	xx	xx		xx	xx		xx	xx	xx	xx	xx		
Mouratides	xx	xx			xx				xx	xx	xx		xx
Pipta											xx		xx
Pizzuto			xx	xx	xx			xx	xx	xx	xx	xx	xx
Plucinski	xx	xx	xx	xx	xx		xx	xx	xx	xx		xx	xx
Rastovsky	xx	xx	xx	xx	xx	xx	xx	xx	xx	xx	xx	xx	xx
Reid	xx	xx	xx	xx	xx			xx	xx	xx		xx	xx
Ruzycki	xx	xx		xx	xx		xx	xx	xx	xx	xx		xx
Siple	xx	xx	xx	xx	xx	xx	xx	xx	xx	xx	xx		
Slifko	xx	xx		xx	xx		xx	xx	xx	xx	xx	xx	xx
Teske													xx
Westerlund	xx	xx	xx	xx	xx	xx	xx	xx	xx	xx	xx	xx	xx
Williams													
Winget	xx	xx	xx	xx					xx	xx	xx		xx

Meeting 1	1/5	Clearing Snow & Ice Safely
Meeting 2	1/12	Ice Storm Preparedness
Meeting 3	1/19	Circular Saw Safety Tips
Meeting 4	1/26	Conducting Safety Tailboard
Meeting 5	2/2	Powerful Protection PPE's
Meeting 6	2/9	Energized Electric Equip.
Meeting 7	2/16	Equipment Checks

Meeting 8	2/23	Trenching Don't's
Meeting 9	3/2	Power of the Power Tools
Meeting 10	3/9	Safe Lifting Tips
Meeting 11	3/16	Hand Protection
Meeting 12	3/23	First Aid Awareness
Meeting 13	3/30	Trips & Falls

Public Works 2021 Safety Training

Date	4/6	4/13	4/20	4/27	5/4	5/11	5/18	5/25	6/1	6/8	6/15	6/22	6/29
Meeting #	14	15	16	17	18	19	20	21	22	23	24	25	26
Anderson	xx	xx	xx	xx	xx	xx	xx			xx	xx	xx	xx
Apps	xx	xx		xx	xx	xx	xx			xx	xx		
Arnold	xx	xx		xx	xx	xx	xx	xx	xx	xx	xx		
Bartok					xx								
Bell	xx	xx	xx	xx	xx	xx	xx				xx		
Cashman	xx	xx		xx	xx	xx	xx	xx	xx				
Clayton	xx	xx			xx	xx	xx	xx	xx			xx	xx
Curran	xx	xx	xx	xx	xx	xx	xx	xx	xx	xx	xx		
Gardner	xx			xx	xx	xx							
Geary	xx	xx	xx	xx	xx	xx	xx	xx	xx	xx	xx	xx	xx
Gembala													
Hamilton													
Higgins	xx	xx		xx		xx	xx			xx	xx	xx	xx
Klocek		xx	xx	xx	xx	xx	xx	xx	xx	xx	xx		
Kolodziej	xx	xx	xx	xx	xx	xx	xx	xx	xx	xx	xx	xx	xx
Kokinda		xx	xx	xx	xx	xx	xx	xx	xx	xx	xx	xx	xx
Knesek													
Krestel	xx		xx	xx	xx	xx	xx	xx	xx	xx	xx	xx	xx
Massey	xx	xx	xx	xx	xx	xx	xx	xx	xx	xx	xx	xx	xx
Matusik	xx	xx	xx	xx	xx	xx	xx			xx	xx	xx	xx
Mouratides			xx	xx	xx		xx	xx	xx	xx	xx	xx	xx
Pipta				xx									
Pizzuto	xx		xx				xx		xx				
Plucinski	xx	xx	xx	xx	xx	xx	xx	xx	xx	xx	xx		
Rastovsky	xx	xx	xx	xx	xx	xx	xx	xx	xx	xx	xx	xx	xx
Ruzycki	xx	xx	xx	xx	xx	xx	xx	xx	xx	xx	xx		
Siple	xx	xx	xx	xx	xx	xx	xx	xx	xx				
Slifko		xx	xx	xx	xx	xx	xx	xx	xx	xx	xx	xx	xx
Teske		xx											
Westerlund	xx	xx	xx	xx	xx	xx	xx			xx	xx	xx	xx
Williams												xx	xx
Winget	xx		xx	xx	xx	xx		xx	xx				

Meeting 14	4/6	Common Sense
Meeting 15	4/13	Hearing Safety
Meeting 16	4/20	Step Ladder Safety
Meeting 17	4/27	Chainsaw Safety Tips
Meeting 18	5/4	Overexertion
Meeting 19	5/11	Safety Awareness
Meeting 20	5/18	Pressure Washer Safety

Meeting 21	5/25	Getting Pleny of Sleep
Meeting 22	6/1	Safe Lifting Techniques
Meeting 23	6/8	Blocking
Meeting 24	6/15	Compressed Air Hose Safey
Meeting 25	6/22	Heat Stress
Meeting 26	6/29	4th of July Safety

Public Works 2021 Safety Training

Date	7/6	7/13	7/20	7/27	8/3	8/10	8/17	8/24	8/31	9/7	9/14	9/21	9/28
Meeting #	27	28	29	30	31	32	33	34	35	36	37	38	39
Anderson	xx	xx		xx		xx	xx	xx	xx	xx	x	xx	
Apps	xx		xx	xx	xx	xx	xx	xx	xx	xx	xx	xx	xx
Arnold	xx	xx		xx		xx	xx	xx	xx	xx	xx	xx	xx
Bell	xx	xx	xx	xx	xx							xx	xx
Cashman	xx	xx										xx	xx
Clayton	xx	xx	xx	xx	xx	xx	xx	xx	xx	xx	xx	xx	xx
Curran	xx	xx	xx	xx	xx	xx	xx	xx	xx	xx	xx	xx	xx
Gardner											xx		
Geary	xx	xx	xx	xx	xx	xx	xx	xx	xx	xx	xx	xx	xx
Gembala													
Hamilton													
Higgins		xx		xx	xx	xx	xx	xx	xx	xx	xx	xx	
Klocek	xx	xx		xx	xx	xx	xx	xx	xx	xx	xx	xx	xx
Kolodziej	xx				xx	xx	xx	xx	xx	xx	xx	xx	xx
Kokinda		xx			xx	xx	xx	xx	xx		xx	xx	xx
Knesek													
Krestel		xx		xx	xx	xx	xx	xx	xx	xx	xx	xx	xx
Massey	xx	xx	xx	xx	xx	xx	xx	xx	xx	xx	xx	xx	xx
Matusik	xx		xx	xx	xx	xx	xx				xx		xx
Mouratides	xx	xx	xx	xx	xx		xx	xx	xx	xx			
Pipta	xx	xx											
Pizzuto		xx		xx		xx	xx	xx	xx	xx	xx	xx	
Plucinski	xx			xx	xx	xx	xx	xx	xx	xx	xx		
Rastovsky						xx	xx	xx	xx	xx	xx	xx	xx
Ruzycki		xx		xx		xx	xx	xx	xx	xx	xx	xx	xx
Siple	xx	xx		xx		xx					xx	xx	xx
Slifko	xx	xx	xx	xx		xx	xx	xx	xx	xx	xx	xx	xx
Teske													
Westerlund	xx			xx	xx	xx	xx	xx	xx	xx	xx	xx	xx
Williams	xx										xx	xx	xx
Winget	xx	xx		xx		xx	xx	xx	xx	xx	xx		

Meeting 27	7/6	Slips and Falls
Meeting 28	7/13	Knife Safety
Meeting 29	7/20	Casught In/On/Between
Meeting 30	7/27	Slip Hazard and Safety
Meeting 31	8/3	Stair Safety
Meeting 32	8/10	All in Fun
Meeting 33	8/17	Elements of Combustion

Meeting 34	8/24	Bad Habits
Meeting 35	8/31	Auditing Ourselves
Meeting 36	9/7	April Fools Day
Meeting 37	9/14	Behavioral Safety
Meeting 38	9/21	Anger: Just One Letter Short of Danger
Meeting 39	9/28	Common Sense

Public Works 2022 Safety Training

Date	1/4	1/11	1/18	1/25	2/1	2/8	2/15	2/22	3/1	3/8	3/15	3/22	3/29
Meeting #	1	2	3	4	5	6	7	8	9	10	11	12	13
Anderson	XX	XX	XX	XX	XX	XX	XX	XX	XX	XX	XX		XX
Apps	XX	XX	XX		XX	XX	XX	XX	XX	XX	XX		XX
Arnold	XX	XX	XX	XX	XX	XX	XX	XX	XX	XX	XX	XX	XX
Bell	XX	XX	XX	XX	XX	XX	XX		XX	XX		XX	XX
Cashman			XX	XX	XX	XX	XX	XX	XX	XX			XX
Clayton	XX	XX	XX		XX	XX	XX	XX	XX	XX	XX	XX	
Curran	XX	XX	XX	XX	XX	XX	XX	XX	XX	XX	XX	XX	XX
Foster	XX	XX	XX	XX	XX	XX	XX	XX	XX	XX	XX	XX	XX
Gardner				XX									
Geary	XX	XX	XX	XX	XX	XX	XX	XX	XX	XX	XX	XX	XX
Gembala													
Hamilton													
Higgins	XX	XX	XX	XX	XX	XX	XX	XX	XX	XX	XX		XX
Klocek			XX	XX	XX	XX	XX	XX	XX	XX	XX	XX	XX
Kolodziej	XX	XX	XX	XX	XX	XX	XX	XX	XX	XX	XX	XX	XX
Kokinda	XX	XX	XX	XX				XX	XX	XX	XX	XX	XX
Knesek													
Krestel	XX		XX		XX	XX	XX	XX	XX		XX		XX
Massey	XX	XX	XX	XX	XX	XX	XX	XX	XX	XX	XX	XX	XX
Matusik	XX		XX	XX	XX	XX	XX	XX	XX	XX		XX	XX
Mouratides	XX	XX		XX			XX	XX	XX	XX			XX
Pipta		XX			XX	XX	XX		XX				
Pizzuto	XX	XX	XX	XX	XX	XX	XX		XX	XX	XX	XX	XX
Plucinski	XX	XX	XX	XX	XX	XX		XX	XX	XX			XX
Rastovsky	XX		XX	XX	XX	XX	XX	XX	XX	XX	XX	XX	XX
Ruzycki	XX	XX	XX	XX	XX	XX	XX	XX	XX	XX	XX	XX	XX
Siple		XX	XX	XX	XX	XX	XX	XX	XX	XX	XX	XX	XX
Slifko	XX		XX	XX	XX	XX	XX	XX	XX	XX	XX	XX	XX
Teske								XX					
Westerlund	XX	XX	XX		XX	XX			XX	XX	XX	XX	
Williams													
Winget	XX	XX		XX	XX	XX	XX		XX	XX	XX		XX

Meeting 1	1/4	Slips Trip N Falls - Winter
Meeting 2	1/11	Quick Equipment Checks
Meeting 3	1/18	Hearing Protection
Meeting 4	1/25	Vehicle Safety
Meeting 5	2/1	Flying Objects
Meeting 6	2/8	All In Fun
Meeting 7	2/15	Caught In/On/Between

Meeting 8	2/22	Funny Safety Quotes
Meeting 9	3/1	Extension Cord Safety
Meeting 10	3/8	House keeping hazaards
Meeting 11	3/15	Blocking
Meeting 12	3/22	Pressure Washer Safety
Meeting 13	3/29	Lightning Safety
Meeting 14	4/5	Nat'l Weather Service Alerts

Public Works 2022 Safety Training

Date	2/15	2/22	3/1	3/8	3/15	3/22	3/29	4/5	4/12	4/19	4/26	5/3
Meeting #	7	8	9	10	11	12	13	14	15	16	17	18
Anderson	XX	XX	XX	XX	XX		XX	XX	XX	XX	XX	XX
Apps	XX	XX	XX	XX	XX		XX	XX	XX	XX	XX	XX
Arnold	XX	XX	XX	XX	XX	XX	XX	XX	XX	XX	XX	XX
Bell	XX		XX	XX		XX	XX	XX				XX
Cashman	XX	XX	XX	XX			XX	XX	XX			XX
Clayton	XX	XX	XX	XX	XX	XX		XX	XX			XX
Curran	XX	XX	XX	XX	XX	XX	XX	XX	XX	XX	XX	XX
Foster	XX	XX	XX	XX	XX	XX	XX	XX	XX	XX	XX	XX
Gardner												XX
Geary	XX	XX	XX	XX	XX	XX	XX	XX	XX	XX	XX	XX
Gembala												
Higgins	XX	XX	XX	XX	XX		XX	XX	XX	XX	XX	XX
Klocek	XX	XX	XX	XX	XX	XX	XX	XX	XX	XX	XX	XX
Kolodziej	XX	XX	XX	XX	XX	XX	XX	XX	XX	XX	XX	XX
Kokinda		XX	XX	XX	XX	XX	XX					XX
Knesek												
Krestel	XX	XX	XX		XX		XX	XX	XX	XX	XX	XX
Massey	XX	XX	XX	XX	XX	XX	XX	XX	XX	XX	XX	XX
Matusik	XX	XX	XX	XX		XX	XX		XX	XX	XX	XX
Mouratides	XX	XX	XX	XX			XX					
Pipta	XX		XX									
Pizzuto	XX		XX	XX	XX	XX	XX	XX	XX	XX	XX	XX
Plucinski		XX	XX	XX			XX	XX		XX	XX	XX
Rastovsky	XX	XX	XX	XX	XX	XX	XX	XX	XX	XX	XX	XX
Ruzycki	XX	XX	XX	XX	XX	XX	XX	XX	XX	XX	XX	XX
Siple	XX	XX	XX	XX	XX	XX	XX	XX	XX	XX	XX	XX
Slifko	XX	XX	XX	XX	XX	XX	XX	XX	XX	XX	XX	XX
Teske		XX										
Westerlund			XX	XX	XX	XX			XX	XX	XX	XX
Williams										XX	XX	XX
Winget	XX		XX	XX	XX		XX	XX	XX	XX	XX	XX

Meeting 1	Meeting 8	2/22	Funny Safety Quotes
Meeting 2	Meeting 9	3/1	Extension Cord Safety
Meeting 3	Meeting 10	3/8	House keeping hazaards
Meeting 4	Meeting 11	3/15	Blocking
Meeting 5	Meeting 12	3/22	Pressure Washer Safety
Meeting 6	Meeting 13	3/29	Lightning Safety
Meeting 7	Meeting 14	4/5	Nat'l Weather Service Alerts
	Meeting 15	4/12	Working around insects
	Meeting 16	4/19	Safety Shoes
	Meeting 17	4/26	Flying Objects

Public Works 2022 Safety Training

Date	4/5	4/12	4/19	4/26	5/3	5/10	5/17	5/24	5/31	6/7	6/14	6/21	6/28
Meeting #	14	15	16	17	18	19	20	21	22	23	24	25	26
Anderson	XX	XX	XX	XX	XX	XX	XX	XX	XX	XX	XX	XX	XX
Apps	XX	XX	XX	XX	XX	XX	XX	XX	XX	XX	XX		XX
Arnold	XX	XX	XX	XX	XX	XX	XX	XX	XX	XX	XX	XX	XX
Bell	XX	XX			XX		XX	XX		XX	XX	XX	XX
Cashman	XX	XX			XX		XX	XX	XX	XX	XX	XX	XX
Clayton	XX	XX	XX	XX	XX		XX	XX	XX	XX	XX		XX
Curran	XX	XX	XX	XX	XX		XX	XX		XX	XX	XX	XX
Foster						XX		XX		XX	XX	XX	XX
Gardner					XX		XX						
Geary	XX	XX	XX	XX	XX	XX		XX	XX	XX			
Gembala													
Hamilton	XX	XX	XX	XX	XX								
Higgins	XX	XX	XX	XX	XX	XX							
Klocek	XX	XX	XX	XX	XX	XX	XX	XX	XX	XX		XX	XX
Kolodziej					XX		XX		XX	XX			
Kokinda						XX	XX		XX	XX	XX	XX	XX
Knesek	XX	XX	XX	XX	XX		XX						
Krestel	XX	XX	XX	XX	XX		XX	XX	XX	XX		XX	XX
Massey		XX	XX	XX	XX		XX				XX	XX	XX
Matusik				XX	XX		XX	XX		XX	XX	XX	
Mouratides													
Pipta	XX	XX	XX	XX	XX		XX						
Pizzuto	XX		XX	XX	XX	XX	XX	XX	XX	XX	XX	XX	XX
Plucinski	XX	XX	XX	XX	XX		XX		XX	XX	XX	XX	
Rastovsky	XX	XX	XX	XX	XX		XX		XX	XX	XX	XX	XX
Ruzycki	XX	XX	XX	XX	XX		XX	XX	XX	XX	XX		XX
Siple	XX	XX	XX	XX	XX	XX		XX	XX	XX	XX	XX	XX
Slifko								XX	XX	XX	XX	XX	XX
Teske		XX	XX	XX	XX		XX		XX	XX	XX		XX
Westerlund			XX	XX	XX	XX	XX			XX	XX	XX	XX
Williams	XX	XX	XX	XX	XX	XX	XX		XX	XX	XX	XX	XX
Winget									XX	XX	XX	XX	XX

Meeting 14	4/5	Nat'l Weather Service Alerts
Meeting 15	4/12	Working around insects
Meeting 16	4/19	Safety Shoes
Meeting 17	4/26	Flying Objects
Meeting 18	5/3	Safe Lifting Technics
Meeting 19	5/10	Auditing Ourselves
Meeting 20	5/17	Awareness On The Job

Meeting 21	5/24	Anger on the job
Meeting 22	5/31	Chain Saws
Meeting 23	6/7	Downed power lines
Meeting 24	6/14	Heat Stress
Meeting 25	6/21	Heat Disorders - Prevention
Meeting 26	6/28	Safe Lifting Techniques
Meeting 27	7/5	Overexertion

Public Works 2022 Safety Training

Date	7/5	7/12	7/19	7/26	8/2	8/9	8/16	8/23	8/30	9/6	9/13	9/20	9/27
Meeting #	27	28	29	30	31	32	33	34	35	36	37	38	39
Anderson	XX	XX				XX	XX	XX	XX			XX	XX
Apps	XX		XX	XX	XX	XX	XX	XX	XX	XX	XX	XX	
Arnold	XX		XX	XX	XX	XX	XX	XX	XX			XX	XX
Bell		XX	XX	XX	XX	XX	XX				XX	XX	XX
Burbridge						Xx	Xx	Xx	Xx	Xx		XX	
Cashman			XX	XX	XX	XX	XX	XX	XX			Xx	XX
Clayton	XX		XX	XX	XX	XX	Xx	XX	XX	XX	XX	XX	XX
Curran	XX	XX	XX	XX	XX	XX				XX	XX	XX	XX
Geary	XX		XX	XX	XX								
Gembala													
Higgins			XX	XX	XX	XX	XX	XX	XX	XX	XX	XX	XX
Klocek	XX	XX	XX			Xx	XX	XX	XX	XX	XX	XX	XX
Kolodziej	XX		XX			XX						XX	XX
Knesek													
Krestel	XX		XX	XX	XX	XX	XX	XX	XX	XX	XX	XX	
Massey	XX	XX	XX	XX	XX	XX	XX	XX	XX	XX	XX	XX	
Matusik	XX	XX	XX	XX	XX	XX	XX	XX	XX	XX	XX	XX	XX
Mouratides	XX					XX		XX	XX	XX	XX	XX	XX
Pipta										XX		XX	
Pizzuto		XX	XX	XX	XX	XX	Xx	Xx	Xx	Xx	XX	Xx	XX
Plucinski	XX	XX	XX	XX	XX		XX	XX	XX	XX	XX	XX	XX
Rastovsky	XX	XX	XX			XX				XX	XX	XX	
Ruzycki	XX		XX	XX	XX	XX	Xx			XX	XX	XX	XX
Siple	XX		XX	XX	XX	XX	XX	XX		XX	XX	XX	XX
Slifko	XX	XX	XX	XX	XX		XX			XX	XX	XX	XX
Teske	XX	XX	XX										
Westerlund	XX		XX			XX	XX	XX	XX	XX	XX	XX	XX
Williams		XX	XX			XX	XX	XX	XX	XX	XX	XX	XX
Winget		XX	XX	XX	XX	XX	XX	XX	XX	XX	XX	XX	XX

Meeting 27	7/5	Overexertion
Meeting 28	7/12	Makeshift Repairs
Meeting 29	7/19	Extension cord saftey
Meeting 30	7/26	Vehicle Fires
Meeting 31	8/2	Battery Safety
Meeting 32	8/9	Serious Injuries
Meeting 33	8/16	Elec Haz Protective Footwear

Meeting 34	8/23	Pushing Safely
Meeting 35	8/30	Ladders and Step Stools
Meeting 36	9/6	Safe use of hand tools
Meeting 37	9/13	It's not my fault
Meeting 38	9/20	Oil spills in the workplace
Meeting 39	9/27	Dangers of Fuel Spills

Public Works 2022 Safety Training

Date	10/4	10/11	10/18	10/25	11/1	11/8	11/15	11/22	11/29	12/6	12/13	12/20	12/27
Meeting #	53	54	55	56	57	58	59	60	61	62	63	64	65
Anderson	XX	XX	XX					XX	XX	XX	XX	XX	
Apps	XX	XX	XX	XX	XX	XX	XX	XX	XX	XX	XX	XX	
Arnold		XX	XX	XX	XX			XX	XX	XX		XX	
Bell	XX	XX			XX	XX		XX	XX	XX	XX	XX	
Burbridge	XX	XX		XX		XX	XX	XX	XX			XX	
Cashman				XX		XX		XX	XX	XX	XX	XX	
Clayton	XX	XX	XX	XX		XX		XX	XX		XX		
Curran	XX		XX	XX	XX	XX	XX	XX	XX	XX	XX	XX	
Gardner				XX				XX	XX	XX	XX		
Geary	XX												
Gembala													
Higgins	XX	XX	XX	XX		XX	XX	XX	XX		XX	XX	
Klocek	XX	XX	XX	XX	XX	XX	XX	XX	XX	XX		Xx	
Kolodziej	XX		XX	XX	XX	XX	XX	XX	XX		XX	XX	
Knesek													
Krestel	XX	XX	XX	XX		XX	XX	XX	XX	XX	XX	XX	
Massey	XX	XX	XX	XX	XX	XX		XX	XX	XX		Xx	
Matusik	XX	XX	XX		XX	XX	XX	XX	XX		XX		
Mouratides	XX			XX		XX		XX	XX	XX	XX		
Pipta	XX			XX							XX		
Pizzuto	XX		XX	XX	XX	XX	XX	XX	XX	Xx	XX	XX	
Plucinski	XX			XX		XX	XX	XX	XX	XX	Xx	Xx	
Rastovsky	XX		XX	XX	XX	XX	XX	XX	XX	XX	XX	XX	
Ruzycki	XX	XX	XX	XX	XX	XX	XX	XX	XX				
Siple	XX	XX	XX	XX	XX	XX	XX	XX	XX		XX	XX	
Slifko	XX	XX					XX	XX	XX		XX	XX	
Teske													
Westerlund	XX		XX	XX	Xx	XX		XX	XX	XX			
Williams			XX	XX	XX	XX		XX	XX	XX	XX	XX	
Winget	XX			XX		XX	XX	XX	XX	XX	XX	XX	

Meeting 53	10/4	Eye Contact Wirh Chemicals
Meeting 54	10/11	Eye Injuries
Meeting 55	10/18	High Visiblity Clothing
Meeting 56	10/25	Emergency Preparedness
Meeting 57	11/1	Safe or just lucky
Meeting 58	11/8	Daylight Saving Time
Meeting 59	11/15	Sbnow Plow Safety

Meeting 60	11/22	Ready for Winter Work
Meeting 61	11/29	Shiftwork Disadavantage
Meeting 62	12/6	Responsibility
Meeting 63	12/13	Winter Health and Safety Tips
Meeting 64	12/20	Snow plow safety
Meeting 65	12/27	Cold Stress

Public Works 2023 Safety Training

Date	1/3	1/10	1/17	1/24	1/31	2/7	2/14	2/21	2/28	3/7	3/14
Meeting #	7	8	9	10	11	12	13	14	15	16	17
Anderson	XX	XX	XX	XX	XX	XX	XX	XX	XX	XX	XX
Apps	XX	XX	XX	XX	XX	XX	XX	XX	XX	XX	XX
Arnold	XX	XX	XX	XX	XX	XX				XX	XX
Bell	XX	XX	XX	XX	XX	XX	XX	XX	XX	XX	XX
Burbridge	XX	XX	XX	XX	XX	XX	XX	BB	XX	XX	XX
Cashman	XX	XX	XX	XX	XX	XX	XX	XX	XX	XX	XX
Curran	XX	XX	XX	XX	XX	XX	XX	XX	XX	XX	XX
Gardner	XX	XX	XX	SG							
Geary	XX	XX	XX		XX	XX	XX	XX	XX	XX	XX
Gembala							XX				
Giza			XX	XX	XX	XX	XX	XX	DG	XX	XX
Higgins	XX	XX	XX	XX	XX	XX	XX	XX		XX	XX
Hood											
Klocek	XX	XX	XX	XX	XX	XX	XX	XX	XX	XX	XX
Kolodziej	XX	XX	XX	XX	XX	XX	XX	XX	XX	XX	XX
Knesek											
Krestel	XX	XX	XX	XX	XX	XX	XX	XX	XX	XX	XX
Massey	XX	XX	XX	XX	XX	XX	XX	XX		XX	XX
Matusik	XX	XX	XX	XX	XX	XX	XX	XX	XX	XX	XX
Mouratides											
Pipta								XX		XX	XX
Pizzuto	XX	XX	XX	XX	XX	XX	XX		XX	XX	XX
Plucinski	XX	XX	XX	XX	XX	XX	XX	XX	XX	XX	XX
Rastovsky	XX	XX	XX	XX	XX	XX	XX	XX	XX	XX	XX
Ruzycki	XX	XX	XX	XX	XX	XX		Xx	Xx	XX	XX
Siple	XX	XX	XX	XX	XX	XX	XX	XX	XX	XX	XX
Slifko	XX	XX	XX	XX	XX	XX	XX	XX	XX	Xx	Xx
Teske	XX	XX	XX	XX	XX	XX					
Westerlund	XX	XX	XX	XX	XX	XX	XX	XX	XX	XX	XX
Williams	XX	XX	XX	XX	XX	XX	XX	XX	XX	XX	XX
Winget	XX	XX	XX	XX	XX	XX				XX	XX

Meeting 6	Falls from any height
Meeting 7	First Aid Awareness
Meeting 8	Lesson Learned ?
Meeting 9	Life Changing Injuries
Meeting 8	Lesson Learned ?
Meeting 9	Life Changing Injuries
Meeting 10	Ladder Safety
Meeting 11	New Employees
Meeting 11	Preserve 10 Fingers

ATTACHMENT D

COMPLAINT CALL LOG

March 2019; Revised June 2019; Revised March 2020; Revised February 2021; January 2024

Call Log 2020

Date	Time	Resident Name	Address	Phone #	Nature of Call	Received by:	Notes	Dept	Resolved Y	By Whom	Date	Time
1/2/2020	12:17 PM		2026 Northwood Ln		Garbage Can Replacement		has a whole in his can. Texted Dave to have it swapped out next week (hole)		y	kw	1/2/20	12:23 PM
1/2/2020	12:19 PM	Shawn(CLM Midwest)	between CVS and gas station (by Town Hall)	(815) 764-5513	Sewer Backup		first basin on east side of street needs to be jetted northbound. CVS had backup dec 27, plumber said it is moving slow and that it had to be jetted last year. Aaron please call him after it is checked out. Dan and Jim jetted amd cleaned	WT/SW	y	DC	1/3/20	10:39 AM
1/6/2020	12:43 PM		3044 Duluth Street		Pot Hole	lp	resident stated there is a big pot hole on the curver over there at glenwood..Dennis filled them	Street	y	bkb		
1/7/2020	8:38 AM		2228 Ridge Road		Leaves Pickup	kw	resident has bagged leaves called 12/31 originally leaves are still out Pete is getting them today	Street	Y	PK	1/7/20	8:47 AM
1/7/2020	9:55 AM	Myong	2533 Lincoln	(219) 308-5581	Locate Lines/B-box	lp	needd bbox locatted and shut off. Water valve leaking. Needs to repair. Paul went an locatted bbox and shut off	WT/SW	y	lp	1/7/20	9:56 AM
1/7/2020	12:00 AM	Brian	2022 Bluebird Lane	(219) 741-7617	Sewer Backup	lp	resident still hgas sewage backing up into house. Messaged aaron Jetted again, still not our issue	WT/SW	y	AK	1/7/20	12:17 PM
1/7/2020	12:07 PM	Keith Long	8037 Spruce St	(219) 718-3542	Tree/Branch Issues	kw	Resident said the tree is dead and was marked awhile ago to come down but it is still there	mark				
1/7/2020	12:00 AM	Republic	Martha and 39th alley		Pot Hole	kw	Republic says the alley between Martha and 39th on the west side of Kennedy has lots of potholes ..Wil assign to Chris to stone and grade on Wednesday	Street	y	bkb		
1/7/2020	12:40 PM	Debbie Stout	8212 Wicker Park Drive	(219) 545-2562	Other: See Notes	lp	resident stated that republic shattered a ton of glass in her driveway and in front of her house and driveway along with a ton of other garbage in the street. And cans were all over the street and not put back close to the curb. Can't park in her driveway or in front of house because of all the glass. Messaged Eric Eric is sending supervisor Dave over there to talk with the resident in regards to this issue.		y	lp	1/7/20	12:42 PM
1/7/2020	12:43 PM		3601 Highway Ave		Garbage not picked up	lp	garbage has been missed the last two weeks. Messaged eric		y	lp	1/7/20	12:44 PM
1/7/2020	12:44 PM		2148 Teakwood Lane		Garbage not picked up	lp	garbage can has only been halfway emptied the last two weeks. Also complained about trash being thrown all over the streets in her neighborhood. Messaged eric		y	lp	1/7/20	12:45 PM
1/8/2020	7:57 AM		8945 Ohio Place		Christmas Tree Pickup	lp	resident called. Someone dumped a tree in their street close to the dead end. Messaged siple to pick it up.	Street	y	lp	1/8/20	7:57 AM
1/8/2020	8:39 AM		27125 Duluth Street		Garbage not picked up	lp	residents garbage was missed yesterday. Messaged eric		y	lp	1/8/20	8:40 AM
1/8/2020	11:56 AM		8732 Woodword		Leaves Pickup	kw	Resident has bagged leaves for pickup..picked up	Street	y	bkb		
1/9/2020	9:38 AM	Paul Trzeciak		(219) 743-3038	Other: See Notes	lp	wants a speed limit sign on 5th street going north by 99th street. Said the traffic from the school fly through there after they pick kids up. The stop sign 5th and 99th street south east corner. Seems to be slanted to where it is hard to see until you hit where the cross walk would be. Stop sign has been repaired.	John Bach				
1/10/2020	8:52 AM	Highland Police Dept			Sign down/damaged	lp	stop sign down at Highway and Sandalwood. Bart taking a temporary sign over there.	Street				
1/10/2020	10:36 AM		2735 Grand Blvd.		Dead Animal	lp	dead animal. (thinks it might be a cat) in the middle of the road. Messaged jeff he is going to take care of it.	Street	y	lp	1/10/20	10:37 AM
9/19/2019		Anna	3500 Block of Condit	(219) 775-3709	Other: See Notes	lp	3500 block of condit. Was wondering if that part of the street is going to be redone. Wants to know if street is going to be widened. She is not happy that their street keeps getting passed. Called on January 14, 2020, left voice message.	John Bach				
1/15/2020	11:22 AM	Bogdan	10232 Idlewild	(219) 588-0981	Water Pressure	lp	resident states that he has no water pressure, wants to know if we can take a look at it. If you can call him to set something up. This is passed along from geri Paul tested, pressure is normal to the house.	WT/SW	Y	PB	1/15/20	1:31 PM
1/21/2020	8:21 AM		3413 Franklin Street	(219) 614-3934	Garbage Can Replacement	lp	garbage can went missing from pickup this morning. Might have gotten dumped into truck. Messaged eric		y	lp	1/21/20	8:22 AM
1/21/2020	9:41 AM		8231 5th Street	(219) 805-1954	Locate Lines/B-box	lp	Needs bbox locatted. Has plumber coming Thursday. Keith and Bob going this morning to locate.	WT/SW				
1/21/2020	9:57 AM		3044 Duluth Street		Pot Hole	lp	pot hole was filled in. now it's bigger than it was before. Sent Tim and Lou.	Street	y	bkb		
1/21/2020	11:47 AM	Sarah Nagel	3302 Farmer Dr	(219) 798-8811	Garbage Can Replacement	kw	Animals have chewed a hole in the can. Sent a text to Eric to get it replaced.		y	kw	1/21/20	11:49 AM
1/21/2020	1:43 PM		3211 Maple	(219) 838-2781	Pot Hole	lp	Tim and Lou got them	Street	y	bkb		
1/22/2020	12:09 PM	Jessie Solis	2810 Condit	(219) 838-2781	Garbage not picked up	kw	Texted Eric		y	kw	1/22/20	12:10 PM
1/22/2020	1:26 PM	Michelle Wilson	2443 River Dr	(219) 614-3361	Sewer Backup	kw	They have had the lines rodded out 3 times at the end of last year and having back up now.Dan and Bob went to investigate…problem taken care of	WT/SW	y	bkb		
1/23/2020	7:48 AM		Hart Rd		Dead Animal	kw	dead skunk between Kennedy and Indy on Hart. Sending Dylan	Street	y	bkb	1/23/20	7:48 AM
1/23/2020	1:54 PM	Anna Marie	9003 Building A Indianapolis BLvd	(219) 836-5799	Sewer Backup	lp	had plumber out and rodded their lines said getting roots 150 ft out. Can we check that out. They are having flooding in the restrooms in daycare restrooms and flooding into their end of the building. Flooding coming from building b.	WT/SW				
1/24/2020	7:57 AM		9533 Saric Drive		Sink Hole	lp	was over there lifting a bbox out of the ground woman says around it in the street as sunk in. she put a chair next to it so no one drives into it.Sean and Lou will level it off with the exisiting pavement.	Street	y	bkb		
1/27/2020	12:11 PM	Doug Code Enforcement	2909 38th St		Other: See Notes	kw	Resident has branches out in the parkway per Code Enforcement…Dennis picked them up	Street	y	bkb		
1/27/2020	1:00pm	Gail	9319 Saric Drive	(219) 712-9405	Water Break	lp	brian going to look.	WT/SW				
1/27/2020	1:31 PM		10019 Erie Place	(219) 924-4096	Sewer Backup	lp	resident stated there is sewage backing up into his basement. Wants us to come check our line to see if it is something on our side of things or not. Let brian know. Jimmy looked at it, not our issue	WT/SW	Y	JA	1/28/20	12:39 AM
1/27/2020	2:08 PM		3044 Duluth Street	(219) 616-1495	Pot Hole	lp	said the pot hole by johnston that was patched up last week is already deep again. Pete is filling it	Street	Y	PK	1/28/20	12:19 AM
1/28/2020	9:49 AM	Greg Tampauskas	10014 Erie Place	(219) 924-7320	Garbage Can Replacement	kw	needs can replaced. Texted Eric		y	kw		
1/29/2020	8:41 AM		9206 Highland Place		Pot Hole	lp	has a ton of potholes wants to know when the town is going to come fix them. Sean and Lou did it today.	Street	y	bkb		
1/30/2020	1:59 PM		3535 Wirth Road		Restorations	lp	resident called. I guess part of the parkway got tore up from a main break. We had the area blocked off and she said she thinks some kids took the stuff out. Didn't know if it needed to be replaced or not, but wanted us to know. Kyle got it	WT/SW	y	KR	1/30/20	11:37 PM
1/31/2020	9:39 AM	Parks Dept	Lakeside Park		Water Break	kw	Parks Dept informed us there is a water break in Lakeside Park	WT/SW	y	kw		
1/31/2020	9:40 AM		3409 Condit St		Water Break	kw	crews are working on it	WT/SW	y			
2/3/2020	8:21 AM	Kevin	3409 Condit St	(219) 333-7698	Other: See Notes	kw	Looking to see when the restorations will be done. Sod torn up and curb that he paid to replace 2 years ago gouged Called and left a message	WT/SW	Y	AK	2/3/20	1:45 PM
2/3/2020		Jim TLC	3315 45th St	(219) 712-6033			Sanitary Sewer looks like he has some debris Checked, sewer is fine	WT/SW	Y	AK	2/3/20	1:42 PM
2/3/2020	11:27 AM		By Target some entrance exit road		Pot Hole	kw	light by 4eyes and urgent care if you go straight you would run into Bill's movers middle of the north lane south of Mcdonalds and that is all I got out of a 10 minute explanation but she is sure it would be a Highland Road and not part of the parking lot.This is not a Highland road, it is an entrance/exit from Indianapolis Blvd. to Highland Grove Mall.	Street	y	bkb		
2/3/2020	3:46 PM	Brianna	8137 Robertson Place	(219) 323-5737		kw	needs recycle replaced. Call back with a scheduled date Scheduled for 2/14/20		y	kw	2/4/20	11:15 AM
2/5/2020	8:38 AM		3238 Duluth Street		Recycle not picked up	lp	recycling missed on whole side of block messaged eric		y	lp	2/5/20	8:39 AM
2/5/2020	8:39 AM		3336 Duluth Street		Recycle not picked up	lp	recycling missed messaged eric		y	lp	2/5/20	8:39 AM
2/5/2020	8:40 AM		7948 Glenwood Street		Garbage not picked up	lp	garbage missed messaged eric		y	lp	2/5/20	8:40 AM

2/5/2020	8:40 AM		2549 Highway Ave		Dead Animal	lp	dead skunk. Messaged jeff	Street	y	lp	2/5/20	8:41 AM
2/5/2020	12:05 PM	Norm	3134 Wirth Rd	(219) 789-5361	Dead Tree/Status?	kw	his daughters house Tree is hollow needs removal	mark	y	Mk	2/5/20	8:41 AM
2/6/2020	8:35 AM	Mike Benda	1141 Cline Ave (Griffith)	(708) 606-7993	Other: See Notes	kw	Griffith resident is complaining that our plows are flying down Cline Ave approx. 40 mph while plowing with the blade down on the Griffith side. This is causing snow to be thrown way up in his yard. He has called Griffith complaing for years and has had several mailboxes damaged. He said last night between the hours of midnight to around 2am it was definitely Highland Trucks. He wanted to leave a vm for Brian and also would like John Bach to call him regarding this. He said after all the complaining to Griffith that their trucks have definitely slowed their roll he would like Highland to follow suit. :)Talked to resident tonight and ensured him we would be more careful infront of his property when plowing snow, but also let him know that we were not doing 40mph+ down Cline ave. Told him if he had any more issues to just call me.	Street	y	bkb		
2/6/2020	10:53 AM		10146 White Oak Lane		Mailbox damaged	lp	mark stated that this mailbox was damaged before the snow even hit. Said it looked like it was hit by a car. Car parts all around it. If resident calls it was not damaged from us.	Street				
2/7/2020	11:31 AM	Harrison	multiple streets see notes	(219) 972-0705	Other: See Notes	lp	president of HOA houses behind meijer. Feels like they are the "red headed step children" when it comes to plowing, said that at the stop sign the intersection on prairie needs to be done and is very icy, also the curve on northwood	Street				
2/10/2020	11:35 AM	Ross Kozora	3720 Highway	(219) 712-9441	Water On/Off Req.	kw	Asking if Paul can shut the water off at 10 am 2/11/20 so he can change the inside valve by the meter. Back on in approx. 1/2 hour also. If there is an issue please call and let Ross know. Paul is on it.	WT/SW	Y	PB	2/11/20	9:07 AM
2/11/2020	9:04 AM		8340 Cottage Grove Place		Garbage Can Replacement	lp	resident has the small can for both garbage and recycle. Wants the regular size cans. Messaged eric.		y	lp	2/11/20	9:05 AM
2/11/2020	12:54 PM	Fikema Plumbing	9616 Farmer Drive Unit #102	(219) 741-5796	Other: See Notes	lp		WT/SW	Y	PB	2/12/20	8:00 AM
2/13/2020	1:20 PM		Kennedy and 100th		Other: See Notes	lp	resident stated that light on kennedy and 100th street will changeto red for traffic on 100th to go but there will be no cars and the light will change to red. Wants to know if something can be done for that because it is "causing traffic to back up."	Street				
2/14/2020	9:00AM	Mark Abbot	3419 42nd Pl.		Water Meter		Resident indicated that his water meter was not reading properly. Paul checked it, it is reading properly.	WT/SW	Y	PB	2/14/20	2:35 PM
2/14/2020	12:15AM	Tim Morris			Water Meter		Resident indicated that his water was not coming out any of his taps. Paul checked, line frozen inside.	WT/SW	Y	PB	2/14/20	2:36 PM
2/18/2020	7:42 AM		2209 Terrace Drive		Snow Plow Damage	lp	sod all over the parkway from plow damage. Wants someone to come clean it up. Cleaned up.	Street	y	bkb		
2/18/2020	9:04 AM	Ashley Ramos	3124 99th Street	2196711448/219	Water On/Off Req.	lp	permaseal coming out on 2/24 and 2/25 bbox already locatted and water turned off on Monday first thing at 8am. So will need someone there at 8am to shut off water at bbox.	WT/SW	y	tg	2/24/20	8:15am
2/18/2020	9:23 AM	Hank	3034 Lakeside Drive		Restorations	lp	still a lot of sand and dirt in the road in front of their house from the water main break on Sunday. Wants to know if a crew can head over there and get that cleaned up.Bob and Keith cleaned it up.	WT/SW	y	bkb		
2/18/2020	11:36 AM		2820 Highway Ave		Street Light Out	kw	Lens on light cover is dangling. Metal Pole by decorative flag...Sean took care of it	Street	y	bkb		
2/18/2020	2:18 PM		9016 Grace St		Recycle not picked up	kw	Texted Eric		y	kw	2/18/20	2:19 PM
2/19/2020	2:13 PM		3339 Franklin St		Snow Plow Damage	kw	Plow tore up a small section of the parkway (sod) and also left a pile of mud and grass in the neighbors driveway who is out of town right now - Tom Porter's mom - 3335 Franklin St..cleaned up.	Street	y	bkb		
2/20/2020	11:01 AM	Maurice Jackson	3924 Juniper Trail	(219) 218-4595	Water Pressure	lp	has had low water pressure and getting worse since work has been done since the work was done across the street. If someone can take a look at that and let him know what the issue is. Spoke with resident he has 1 faucet with low pressure,Paul will look at it next week	WT/SW	y	tg		
2/20/2020	11:25 AM	Richard	9444 Forest Drive	(708) 262-4647	Sewer Backup	lp	resident said he is having sewage back up into his house. Checked his lines he said there is nothing there, wants our lines checked. Messaged tim in regards to this issue. Resident called back and said that he was able to fix problem on his end	WT/SW	y	lp	2/20/20	11:48 AM
2/20/2020	11:48 AM	Mary	8748 Kleinman Road	(219) 923-9906	Valve Issues	lp	dennis was out yesterday to put in a new meter. Resident called back today stating that the valve is now leaking water everywhere and it was not like that yesterday when dennis was there. Keith tightened packing nut drop stopped	WT/SW	y	tg	2/20/21	1:00pm
2/20/2020	2:13 PM		3315 45th Street		Other: See Notes	lp	cover popped off of manhole behind the strip mall behind planet fitness. If we can go put it back. Bob ruzycki checked it	WT/SW	y	tg	2/21/20	8:00am
2/21/2020	4:13 PM	Mark	8141 Grace Pl	(219) 718-9530	Other: See Notes	kw	came home to a bunch of branches in his backyard. Advised Nipsco would be back tomorrow to remove them		y	kw	2/21/20	4:17 PM
2/24/2020	9:21 AM		2711 38th Street	(219) 972-1118	Locate Lines/B-box	lp	has a plumber coming out on Wednesday to replace a leaking valve, needs bbox locatted sometime before WednesdayB - Box has been marked in sidewalk	WT/SW	y	kp	2/24/20	11:00am
2/24/2020	9:29 AM	Jeremy Scheeringa	3252 George St	(219) 808-1053	Locate Lines/B-box	kw	Resident has a broke bbox and currently has water coming into the home at a quick rate. Sending crew out to fix the bbox to get the water offB -Box has been repaired	WT/SW	y	tg	2/24/20	10:00am
2/24/2020	10:32 AM	Katrina	8951 Lawndale St	(219) 256-6783	Tree/Branch Issues	kw	Please check status of 2 trees in parkway. Resident believes the trees are diseased. Loosing large branches. Also check the house to the North of her house, same thing.	Mark				
2/24/2020	10:35 AM	Katria	8951 Lawndale St	(219) 256-6783	Drainage Issues	kw	Resident is looking for info for tapping into storm sewer. They are having a company waterproof the basement and adding a sump pump and need to know where they can drain the waterresident has been advised there is no storm sewer in area	WT/SW	y	kw/tg	2/24/20	10:30am
2/25/2020	10:01 AM	Larry Kondrat	8115 4th Pl East		Water Break	kw	Possible water main break in the alley. Keith is checking it out.	WT/SW				
2/25/2020	12:07 PM		3128 100th Pl		Garbage not picked up	kw	Sent text to Dave		y	kw	2/25/20	12:08 PM
2/25/2020	12:19 PM		8939 Prairie		Other: See Notes	kw	Has branches out and so does the neighbor. Second time calling	Street	y	bkb		
2/26/2020	2:43 PM		2711 38th Street	(219) 972-1118	Valve Issues	lp	residents inside valve is leaking really bad. Trying to turn off water at the bbox but cannot. Needs water turned off. Gave message to tim. B-box is broke resident told kieth it isnt leaking bad locates have been called scheduled to repair 3-2-20	WT/SW	y	kp/tg	2/28/20	11:00am
2/27/2020	9:07 AM	Richard	3221 George Street	(219) 588-0802	Sewer Backup	lp	has sewer in basement backing up into house. Says there is nothing on their end. Wants us to take a look at it and see if there is anything on our end. Dan checked our sewers they are fine, resident has been advised	WT/SW	y	dc	2/28/20	2:30pm
2/27/2020	9:23 AM		8814 Kleinman Road		Garbage Can Replacement	lp	has broken wheel on garbage can, messaged eric to have can swapped out.					
2/27/2020	12:37 PM		2603 41st Place		Other: See Notes	lp	complaining about the snow being plowed and blocking the mailboxes that there is an empty lot and why can't we push it there.	Street				
2/28/2020	9:39 AM		100th Place and Kennedy		Other: See Notes	lp	the light at 100th place and kennedy. The light will change red on North/southbound lanes on kennedy when there are no cars coming from 100th place. Says it backs up traffic for no reason if we can have this looked into. Kennedy Ave timed out with 51-52 seconds while green and 100th St timed out at 21-22 seconds while green so they seem fine.	Street	y	bkb		
3/1/2020			3516 Laporte		Water Break	kw	overnight water main break, completed 3/2/20	WT/SW	y	kw	3/2/20	8:35 AM
3/2/2020	11:55 AM		8349 Prairie Ave		Other: See Notes	kw	Resident called stating the crew did a "stellar" job picking up her branches. She just wanted to give a big "Thank you" for a job well done..That would be Tim and Grant.	Street	y	kw	3/2/20	11:57 AM
3/3/2020	9:25 AM		8805 Prairie Ave		Other: See Notes	lp	resident called in complaining about trash always being in the street after the garbage man has been through the area and also how her garbage can is always put back in the middle of her driveway. Messaged eric		y	lp	3/3/20	9:26 AM
3/3/2020	9:26 AM		2600 block of Jewett		Other: See Notes	lp	resident called complaining about how he and his wife are always picking up garbage after the garbage man has been through said they are tired of having to clean it up. Messaged eric		y	lp	3/3/20	9:27 AM

3/3/2020	11:11 AM	Robert Duddy	9418 Grace Street	219-677-9210	Locate Lines/B-box	lp	To replace valve inside the house. Paul going to locate bbox.	WT/SW	y	pb	3/3/20	2:30pm
3/3/2020	11:26 AM		8544 Kennedy Ave		Pot Hole	lp	ally just west of address there is a pot hole. Dennis and Luke will take care of them.	Street	y	bkb		
3/3/2020	1:32 PM		8119 Grace Street		Other: See Notes	lp	resident called and said that after the garbage man comes she is always having to go out in her yard and pick up loose trash. She said it is a weekly occurance and is tired of picking up trash and that the garbage man sees it happen and doesn't stop to pick it up. messaged eric in regards to this issue		y	lp	3/3/20	1:33 PM
3/3/2020	3:23 PM		8918 Cottage Grove Place		Recycle not picked up	lp	recycle was missed. Messaged eric.		y	lp	3/3/20	3:23 PM
3/4/2020	10:03 AM		3852 Highway Ave		Garbage not picked up	lp	garbage missed messaged eric	Street	y	lp	3/4/20	10:03 AM
3/4/2020	10:04 AM		2636 Duluth Street		Garbage not picked up	lp	garbage missed messaged eric		y	lp	3/4/20	10:04 AM
3/4/2020	12:43 PM		3300 Block Garfield and Condit		Other: See Notes	kw	resident asking if this alley can be stoned and grated, it is full of potholes...Alley work will be performed as soon as it dries out more and we have a chance to get into them.	Street				
3/4/2020	12:55 PM		8406 5th Street		Garbage Can Replacement	lp	resident needs a new garbage can theirs has a hole in it. Messaged eric		y	lp	3/4/20	12:56 PM
3/4/2020	2:33 PM		9219 Cottage Grove Place	(219) 742-3057	Pot Hole	lp	has two pot holes at the end of their driveway in the street. Resident said they hit them everytime they pull in or our of their driveway. Dennis and Luke filled them.	Street	y	bkb		
3/4/2020	2:50 PM		8942 Pettit Drive		Recycle not picked up	lp	recycle was missed. Messaged eric.		y	lp	3/4/20	2:50 PM
3/5/2020	10:33 AM		9008 Pettit Drive		Recycle not picked up	lp	recycle was missed. Messaged eric.		y	lp	3/5/20	10:33 AM
3/5/2020	1:19 PM	Mildred Miller	9625 Erie St	(219) 924-1590	Sewer Backup	kw	Kitchen sink is backing up, please check the main - Called Aaron to check it out Aaron checked our mains they were fine and advised resident	WT/SW	y	ak	3/5/20	2:00pm
3/6/2020	8:56 AM		8623 Liable Road		Pot Hole	lp	pot hole in street in front of 8623 Liable Road.Sean and Tim will get it.	Street	y	bkb		
3/9/2020	8:39 AM	Popa Heating and Cooling	2643 Highway Ave		Pot Hole	lp	really bad pot holes in the alley off of second all the way the down and two big ones behind their lot. Sean and Dennis took care of them.	Street	y	bkb		
3/9/2020	12:00 AM		George and Farmer Dr (Farmer Dr side)		Sink Hole	kw	Her husband filled it in once but it is sunk again and they are not sure what is going on. It is in the middle of the parkway. Please check. Gave notice to Tim. Dan will televise this on 3/16/20 to identify the problem	WT/SW				
3/9/2020	3:03 PM		8802 Johnston Street		Sewer Backup	lp	just had plumber rod out line, said her end is clear and that our end is backed up if someone can go take a look at it. Gave to aaron he will look at it tomorrow. 3/10/20 Aaron checked our sewer main and it was fine nobody was home	WT/SW	y	ak	3/10/20	1:00 PM
3/10/2020	12:00 AM		9231 Liable Rd		Leaves Pickup	kw	Resident has bagged leaves in parkway for pickup..picked up	Street	y	bkb		
3/10/2020	12:40 PM	Michael Madura	2020 Northwood Lane	(219) 922-1087	Restorations	lp	had a concrete square right by the curb in front of house was filled with gravel, now gravel is all in his lawn and wants it cleaned up. Called nipsco said it wasn't them, didn't know if it was us. If we could get it cleaned up and if someone can contact him back in regards to this when it is done or if it was not us. resident called back to thank the town for a fast response to this issue. Taken care of today.	Street	y	bkb		
3/10/2020	1:12 PM	Larry Moes	2904 Clough Ave	(219) 864-0069	Pot Hole	kw	Pothole along curb and in the middle of the street..Pete and Luke got them.	Street	y	bkb		
3/10/2020	2:51 PM		2900 Block of Lincoln		Garbage not picked up	kw	garbage missed messaged eric					
3/11/2020	8:03 AM		8211 Sycamore Ave		Garbage not picked up	lp	garbage missed messaged eric		y	lp	3/11/20	8:04 AM
3/11/2020	8:19 AM		8841 Woodward Ave		Garbage not picked up	lp	garbage was missed on whole block. Messaged eric		y	lp	3/11/20	8:20 AM
3/11/2020	8:45 AM		3328 George		Other: See Notes	kw	came home last night to fence down and Bbox marked. Resident wanted to know what was going on and why she wasn't notified. This was from discontinuing a service line and the fence will be put back up late today or tomorrow. Resident notified the part of the fence that was removed was reinstalled on 3/12/20 the rest of the fence is in poor condition	WT/SW	y	tg	3/11/20	8:47 AM
3/11/2020	4:00 PM	Adam	3016 99th St	(773) 757-3223	Other: See Notes	kw	Resident believes recycle truck is leaking hydraulic fluid on the street. Texted Eric, he said as far as he knows there has been no truck issues.					
3/12/2020	2:48 PM		2024 briarwood lane		Restorations		park on blvd drive parkway leading to it tore up from snow plow.Added to the list.	Street	y	bkb		
3/16/2020	10:11 AM		N.E corner duluth and kennedy		Other: See Notes	lp	Kennedy Crosswalk light hanging. Broken off of pipes. Wire hanging and still has power. Called midwestern	Street	y	lp	3/16/20	10:12 AM
3/17/2020	10:17 AM		2430 Ridge Road		Garbage not picked up	lp	garbage was missed. Messaged eric		y	lp	3/17/20	10:17 AM
3/17/2020	12:02 PM		8927 Branton		Other: See Notes	kw	someone dumped tires in the alley..Jeff will get them.	Street	y	bkb		
3/17/2020	12:13 PM	Jeremy Scheeringa	3252 George St	219-808-1053	Water Break	kw	Believes there is a break between the curb and the bbox. Notified Tim Kyle checked this out said its ground water , resident was advised	WT/SW				
3/18/2020	9:48 AM	Wolak	3837 Wicker Ave	(219) 616-5193	Recycle not picked up	lp	resident stated she is not going to put her recycle bin back until it gets picked up and if the town cites her to be ready for a fight. Messaged eric.		y	lp	3/18/20	9:49 AM
3/18/2020	11:08 AM		3142 Martha Street		Leaves Pickup	lp	resident has bagged leaves.Jeff will get them.	Street	y	bkb		
3/18/2020	1:46 PM	Alfred	8332 Gordon Dr	(219) 616-2456	Water On/Off Req.	kw	new account needs water turned on, call transferred from TH	WT/SW				
3/19/2020	11:54 AM	Christine	9032 Pettit	(219) 484-9065	Recycle not picked up	kw	texted Eric The whole street and maybe Hess have been missed the last 2 pickups		y	kw	3/19/20	11:54 AM
3/19/2020	2:24 PM		10019 Erie Place	(219) 301-8593	Sewer Backup	lp	they are having problems with their sewer. Wants to know if we can take a look at our end.	WT/SW				
3/23/2020	8:39 AM	david	3730 43rd Street	(219) 544-1219	Water On/Off Req.	lp	snow bird coming back needs water turned on either today or tomorrow.	WT/SW				
3/24/2020	9:45 AM		9205 Spring St		Garbage Can Replacement	kw	both cans need replaced due to damage by animals. Texted Eric		y	kw	3/24/20	9:46 AM
3/24/2020	11:00 AM		8043 Spruce		Garbage not picked up	kw	texted Eric		y	kw	3/24/20	1:05 PM
3/24/2020	2:21 PM		2712 Eder St		Garbage Can Replacement	kw	both cans need replaced due to damage by animals. Texted Eric		y	kw	3/24/20	12:00 AM
3/25/2020	7:51 AM		3200-3300 Block of Glenwood and Northdrive		Garbage not picked up	kw	texted Eric		y	kw	3/25/20	7:56 AM
3/25/2020	8:41 AM	Slyvia Almaraz	2646 Clough Ave	(219) 972-0796		kw	Please check the sidewalk, resident says it is buckling and she doesn't know why. I told her about the Sidewalk Replacement Program. Let her know. Thanks!..Talked to resident today.	Street	y	bkb		
3/25/2020	8:49 AM	Zeph Lawerence	3321 Garfield	(832) 445-5860	Locate Lines/B-box	kw	resident has Tiger Plumbing coming tomorrow to fix an unknown leak (water is coming into the residence). Needs Bbox located Resident called back, he was able to locate the Bbox himself	WT/SW	y	kw		
3/25/2020	9:53 AM		9533 Kennedy Ave		Garbage not picked up	kw	Sent to Eric		y	kw	3/25/20	9:53 AM
3/25/2020	12:54 PM		3104 Grand Blvd		Other: See Notes	kw	putting branches out for pickup, might also have some small bushes. They are having a fence put in and have to clear the way.Picked by Sean and Tim.	Street	y	bkb		
3/26/2020	9:40 AM	David Kristoff	3236 Strong St	(219) 588-7395	Sink Hole	kw	West of the driveway on the side of the house near the garage. Bbox was replaced last year and the ground has sunk around it. Resident was told it would probably happen and to call and we would fill the hole and re-seed.	WT/SW				
3/26/2020	11:55 AM	Dan Malone	2054 Ridge Rd	(219) 682-5401	Other: See Notes	kw	Manhole in front of his residents (on Ridge Rd) was cushioned approx. 7 years ago and is now back to causing vibrations and cracked walls in his residence from the trucks hitting the manhole cover. Please check it out.	WT/SW				

3/26/2020		April	2933 Parkway Dr	(219) 588-0585	Other: See Notes	kw	please quote to replace the curb at the driveway. They are moving in there and say the curb is to high and makes it rough getting in and out.	Street				
3/30/2020	9:07 AM	Jennifer Perez	3104 Grand Blvd	(219) 513-8921	Tree/Branch Issues	kw	Believes both trees in the parkway are dead. Please check	mark				
3/30/2020	11:06 AM	Raymond	9342 Cline Ave	(773) 310-0678	Mailbox damaged	kw	Mailbox damage from plows. Check the neighbor's too...Both have been repaired.		y	bkb		
3/30/2020	2:22 PM	Dalene	8945 Ohio Place	(219) 671-7300	Tree/Branch Issues	kw	large branch hanging (hazard) resident tried to reach it to cut it herself but it is out of reach...Taken care off by Kevin.	Street	y	bkb		
3/31/2020	10:08 AM		Highland Post Office		Other: See Notes	kw	Resident complaining of the huge potholes in the lot. Is it private property?Yes it is...she needs to call the post office.These were filled by Dennis since they were actually on the Laporte St. side.	Street	y	bkb		
3/31/2020	12:00 AM	Rob (Gatlin Plumbing)	3613 45TH St	(219) 313-3433	Locate Lines/B-box	kw	Main shutoff needs replaced. Please let him know when the box is located Keith could not locate it 3/31 Paul is going to try 4/2 Called Rob 4/1 with an update	WT/SW				
3/31/2020	12:00 AM	Annie	3030 Strong	(219) 616-5527	Sink Hole	kw	Parkway was dug up quite a few years ago and she has to call every couple of years to fill the area because it keeps sinking. Bach is checking on it	WT/SW				
4/1/2020	3:30pm	David Matthews	3102 Lois Pl	(219) 512-3218	Sewer Backup	kw	Resident wanted to know when the restorations might start from Water Main Break over the winter	WT/SW				
4/2/2020	2:42 PM		9008 Pettit Drive		Restorations	kw	Sewer work was done last year and resident is not happy with the restorations. She said the ground is uneven and the grass seed is spotty.	WT/SW				
4/3/2020	9:07 AM		3432 Garfield	(219) 671-4343	Sewer Backup	kw	Check main, they have backup in the house. Gave to Aaron	WT/SW				
4/7/2020	10:15 AM	Lauren Earshaw	3502 41st St	(708) 601-8866	Drainage Issues	kw	backyard is flooding after removing bushes last year, wants to know if there is any drain in the back to connect to	WT/SW				
4/7/2020	12:10 PM	Sylvia	9930 Wildwood Circle	(219) 808-7311	Water Pressure	kw	Her parent's just moved into the home at the beginning of the month and have very little water pressure throughout the house. Can we make sure the bbox is fully opened? They have checked the valve inside the home to make sure it is completely open.	WT/SW				
4/7/2020	12:12 PM	Cheryl	3214 Grand Blvd	(708) 743-9003	Drainage Issues	kw	Water in the basement that is not draining as usual. Please check the main.	WT/SW				
4/7/2020	12:23 PM	Diane Radzinski	3245 Lincoln St	(219) 838-4384	Tree/Branch Issues	kw	Tree is raising the sidewalk, please check. They are elderly and staying away from the public so they asked for a phone call. Called resident 4/15 and explained the sidewalk replacement program and informed her that the tree was not dead so we would not remove it. She is going to discuss it with her husband	mark	y	kw		
4/7/2020	3:02 PM		3430 41st Pl		Sink Hole	kw	Sink hole at the end of the driveway...barricaded by sewer dept.		y	bkb		
4/7/2020	3:36 PM	Zach Camarena	9230 Cottage Grove Pl	(219) 614-1876	Tree/Branch Issues	kw	Tree roots are causing issues with storm drain Water coming in basement Please Check 3 different plumbers have told him it is the tree it is also affecting the sidewalk. Town will be removing the tree	Mark	y	mk		
4/8/2020	11:59 AM	Mike Neilson	9610 Erie St	(708) 259-6607	Other: See Notes	kw	Asking if the Alley behind his house can be grated, it has a lot of holes and has been in bad shape for awhile. This is not an alley, we have never plowed or maintained it for as far as I know, it is a cut thru from the said address that runs behind the duplex out to 44th st. This address has no garage so they use the easement to access the drive from 44th st.	Street	y	bkb		
4/8/2020	1:09 PM		9546 Manor Dr		Restorations	kw	Waiting on restorations from snow plow damage	Street				
4/13/2020	8:06 AM		3700 block of 42nd Drive		Other: See Notes	lp	shattered glass in the street. Wants to know if the street sweeper can come through and get that cleaned up.Sent Lou	Street	y	bkb		
4/13/2020	12:00 AM	Sarah Horvatich	8052 Duluth	(219) 838-1714	Sewer Backup	kw	This residence and another (8001 Duluth) have sewer backup. Dan will check it out.	WT/SW				
4/13/2020	9:40 AM		2247 Oakdale Street		Garbage Can Replacement	lp	new resident. Does not have garbage or recycle cans. Messaged eric		y	lp	4/13/20	9:41 AM
4/13/2020	11:36 AM	Kimberly	8632 Osborne	(219) 808-5780	Sewer Backup	kw	Has sewer backup in the basement. Dan is checking the main	WT/SW				
4/14/2020	10:04 AM		2135 Lincoln Street		Garbage not picked up	lp	garbage was missed messaged eric		y	lp	4/14/20	10:04 AM
4/14/2020	10:31 AM	maeze	2540 Clough Ave	(773) 280-3151	Dead Tree/Status?	lp	has a tree in her parkway dropping big branches thinks it might be dead if we can take a look at it. Trees not dead need pruning	Mark	y	MK	4/16/20	2:17 PM
4/14/2020	1:49 PM	Bob	3214 O'day Drive	(773) 505-3507	Dead Tree/Status?	lp	has trees in parkway dropping a lot of branches and thinks they may be dead. Not dead needs pruning	Mark	y	Mk	4/16/20	2:17 PM
4/14/2020	2:31 PM	Dierk (Fikema Plumbing)	2707 Strong Street	(219) 741-5796	Other: See Notes	lp	building dept called. Fikema needs an inspection on a undergroung cast iron drain to sanitary sewer. Needs inspection for Wednesday 4/15/2020 between 7:30am-8:30am. Left note on brians desk to have someone do that tomorrow..Keith did it.	WT/SW	y	bkb		
4/14/2020	3:37 PM	Tim (New Life Church)	8900 Block of Kleinman	(219) 616-1776	Water On/Off Req.	lp	hope cemetary wants the meter put back in and water turned back on. Please call and let him know when this is done.	WT/SW				
4/15/2020	8:04 AM		9446 Saric Drive		Garbage not picked up	lp	garbage was missed last week and again this week. Messaged eric		y	lp	4/15/20	8:04 AM
4/15/2020	8:29 AM		corner of 43rd and hook Street		Sign down/damaged	lp	corner of 43rd and hook street. Street sign is leaning. Left a note with Jeff.	Street	y	bkb		
4/15/2020	3:31 PM		9347 Southmoor Ave		Garbage not picked up	lp	garbage missed messaged eric		y	lp	4/15/20	3:32 PM
4/15/2020	3:52 PM		9347 Southmoor Ave		Garbage Can Replacement	lp	recycle bin is damaged and needs a new one messaged eric		y	lp	4/15/20	3:52 PM
4/16/2020	3:49 PM		8148 Sycamore Ave		Recycle not picked up	lp	recycling was missed. Messaged eric		y	lp	4/16/20	3:50 PM
4/17/2020	8:10 AM		kennedy and main		Traffic Light Out	lp	red light out at southbound main and kennedy. Brian is aware jeff is going to take care of it later	Street	y	lp	4/17/20	8:50 AM
4/17/2020	1:03 PM		3309 41st Place		Branches Missed	lp	has had branches out for 4 weeks now and her neighbors were picked up and not hers	Street				
4/17/2020	1:26 PM		9015 Hess Drive		Garbage Can Replacement	lp	resident has cracked can on the bottom. Messaged eric		y	lp	4/17/20	1:27 PM
4/20/2020	8:39 AM		8217 Grace Place		Restorations	lp	plow damage from winter on parkway.	Street				
4/20/2020	9:16 AM	Jason Novak	8050 Spruce St	(219) 381-6375	Sink Hole	kw	sink hole on the side of a detached garage where possibly a new bbox was put in last year. Please check	WT/SW				
4/20/2020	9:20 AM		2736 Glenwood Street		Dead Animal	lp	resident has a dead possum on sidewalk in front of house if someone could go get that...Dylan is getting it	Street	y	bkb		
4/20/2020	1:55 PM	Robert Crowel	8925 Arbor Hill Dr	(219) 776-8087	Other: See Notes	kw	nipsco tore up the back last year and never did the restorations. Mark is contacting the nipsco rep. Call resident back when there is an answer.	Mark				
4/21/2020	9:41 AM	Edith	prairie/41st street intersection	(219) 765-2969	Pot Hole	lp	pothole at intersection of prairie and 41st street in meadows subdivision...Tim Slifko filled it.	Street	y	bkb		
4/21/2020	10:17 AM	Edith	2237 99th Street	(219) 765-2969	Garbage Can Replacement	lp	needs small recycle bin swapped out for a regular size can. Messaged eric	Street	y	lp	4/21/20	10:18 AM
4/22/2020	8:05 AM		Saric Drive	(773) 851-4776	Other: See Notes	lp	resident called having issues with garbage man throwing garbage all over the road, been an issue for a few weeks, messaged eric in regards to this		y	lp	4/22/20	8:07 AM
4/22/2020	8:47 AM	Ron	9935 Northwood Ct	(219) 802-9933	Water Break	lp	resident said there is a lot of water coming up out of ground between the two town homes. Let tim know. Paul talked to the resident there is not an issue on our end might be a sprinkler issue	WT/SW	y	lp	4/22/20	9:30 AM
4/22/2020	9:47 AM	Dennis	3203 Martha Street	(720) 323-3665	Tree/Branch Issues	lp	resident said someone on his block cut a tree and let it fall into cady ditch. It is blocking the ditch and causing there to be build up. Resident would like a call back	mark				
4/22/2020	12:00 AM	Mary Bercier	Martha St/Kennedy	(219) 677-6071	Pot Hole	kw	Large hole in the road that the elderly lady has tripped in. Kennedy to Martha, then at the end of Martha by the ditch.Tim and Dennis will put a little cold patch down.	Street	y	bkb		
4/23/2020	11:04 AM	Brian Meltz	2826 Ross St	(708) 738-4147	Other: See Notes	kw	Nipsco trimmed branches from the wires last week and left huge ruts in the grassy utility easement. Resident wants to know if they are going to fix it? Left message with NIPSCo	mark	y	mk	4/30/20	
4/23/2020	11:08 AM		wicker ave		Other: See Notes	lp	across from vfw on ridge road someone sumped a bunch of tree branches on hill. If someone can pick those up.	Street				
4/23/2020	12:42 PM	Christina Ritz	9205 Grace Place	(219) 629-5733	Locate Lines/B-box	lp	needs bbox locatted. Has a plumber coming Saturday. Keith went to do it.	WT/SW	y	bkb		

4/23/2020	1:12 PM	Peter	3733 42nd Drive	(219) 545-4144	Mailbox damaged	lp	residents mailbox was taken out by a plow over the winter. Said he needs a new post put in he has one. And resident has mailbox if you can call when someone goes to fix it so he can put them out.	Street				
4/23/2020	2:42 PM		9145 Liable Road		Recycle not picked up	lp	recycling missed. Messaged eric		y	lp	4/23/20	2:43 PM
4/27/2020	9:34 AM	Lori Makrowski	8939 Cottage Grove Pl	(219) 805-6842	Tree/Branch Issues	kw	Please check tree status, resident thinks the trees are dead	Mark				
4/27/2020	10:45 AM		3428 Strong Place		Branches Missed	lp	said truck drove by and didn't pick up branches in front of his house has had them out for two weeks…this is a pile of hay on top of a few branches that's probably why they werent picked up…will leave a note for branch crew to pick up up tomorrow.	Street	y	bkb		
4/27/2020	2:10 PM		2941 Highway Ave		Garbage Can Replacement	lp	had recycle bin stolen. Messsaged eric.		y	lp	4/27/20	2:10 PM
4/28/2020	9:18 AM	Lisa Villareal	2725 Garfield	(219) 314-7921	Restorations	lp	had grass tore up last fall from work being done on a tree that fell. Was told we would repair that in the spring. Wanted to make sure she was still going to have that repaired.	mark				
4/28/2020	12:30 PM	Linda Haag	3118 Eder St	(219) 688-6120	Locate Lines/B-box	kw	Needs Bbox located…Gave to Keith to do.	WT/SW	y	bkb		
4/28/2020	1:11 PM	Bronco Vukotic	3416 Highway Ave	(219) 201-7043	Pot Hole	kw	Resident says that are a lot of potholes in the alley making it unusable. Wants to know if we can do something with it.The only holes with water in them are behind this address, the alley is not unusable and I will add to the list of alleys that we plan on doing some grading to.	Street	y	bkb		
4/28/2020	3:16 PM	Kathleen Jage	8957 Cottage Grove Ave	(219) 923-6263	Tree/Branch Issues	kw	Please check status of tree in parkway Trees not dead need pruning	mark	y	MK	4/29/20	
4/28/2020	3:24 PM	Richard Whitmore	9534 Spring Street	(219) 718-6260	Other: See Notes	lp	said parking lot next to him had a lot of water that appeared to be coming up from the ground. Gave to keith to go look at.	WT/SW				
4/29/2020	8:26 AM		3009 99th Street		Garbage not picked up	lp	had garbage in recycle bin and was missed.resident did not have can labeled that it was garbage. Messaged eric.		y	lp	4/29/20	8:27 AM
4/29/2020	8:27 AM		3419 Laverne Drive		Garbage not picked up	lp	garbage was missed messaged eric		y	lp	4/29/20	8:27 AM
4/29/2020	8:28 AM		9008 Pettit Drive		Recycle not picked up	lp	recycling was missed. Messaged eric		y	lp	4/29/20	8:28 AM
4/29/2020	8:28 AM		3232 Ridge Road		Recycle not picked up	lp	recycling was missed. Messaged eric		y	lp	4/29/20	8:29 AM
4/29/2020	8:44 AM	Andrew Earnshaw	3502 41st Street	(219) 796-7096	Drainage Issues	lp	has called and left several messages for mark he stated he has been calling inregards to a sewer for his backyard. If you could call him back. He called like 3 times in row. Met with resident wood timbers stopping flow.	mark	y	mk	4/29/20	1:30pm
4/29/2020	8:47 AM	Tim	2646 Martha Street	(773) 503-1389	Locate Lines/B-box	lp	has a bursted pipe. Needs bbox locatted and water shut off. Called paul going over there.	WT/SW	y	lp	4/29/20	8:51 AM
4/29/2020	9:02 AM		8800 Block of Cottage Grove Ave		Recycle not picked up	kw	messaged Eric		y	kw	4/29/20	9:03 AM
4/29/2020	9:25 AM		8800 Block of Highland Ave		Recycle not picked up	kw	messaged Eric		y	kw	4/29/20	9:25 AM
4/30/2020	8:29 AM		3125 Lincoln Place		Tree/Branch Issues	lp	tree in the cul de sac is dropping big limbs that is blocking the road if someone can go get those. Also resident thinks tree is dead. Jeff is going to go clear stuff from the street.	mark				
4/30/2020	8:44 AM		2540 Clough Ave	(312) 623-2214	Drainage Issues	lp	has water coming up from his basement drains. If we can take a look on our end. Paul going over there to take a look at it.	WT/SW				
4/30/2020	10:44 AM		9314 4th Place		Garbage Can Replacement	lp	resident has hole in lid messaged eric		y	lp	4/30/20	10:45 AM
4/30/2020	11:19 AM	Bryan Wiesemann	3420 41st Place	(219) 308-6912	Tree/Branch Issues	lp	resident haws a possible dead tree in parkway dropping huge limbs if you can take a look at it and call them back and let them know	mark				
4/30/2020	11:28 AM		2604 40th Street		Sewer Backup	lp	resident said he has sewage backing up in his yard. Paul went to go look not on our end.	WT/SW				
4/30/2020	11:33 AM	Chris Cunningham	9139 Highland Pl	(219) 924-4553	Sewer Backup	kw	has backup in the house, called Paul to check the main.	WT/SW				
4/30/2020	1:26 PM	Peter	3733 42nd Drive	(219) 545-4144	Mailbox damaged	lp	residents mailbox was taken out by a plow over the winter. Said he needs a new post put in he has one. And resident has mailbox if you can call when someone goes to fix it so he can put them out.called a week ago still hasn't been fixed wants someone to call him in regards to this so it can be fixed ..Jeff will take care it, talked with the resident	Street	y	bkb		
4/30/2020	3:44 PM	Darlene	8928 Schneider Ave	(219) 614-6278	Drainage Issues	lp	having water backing up into basement wants to make sure it isn't from us. Called dan going to go take a look at it	WT/SW				
5/1/2020	10:17 AM		2834 Highway Ave		Other: See Notes	kw	Received a call that clean water was running into the business and they needed the water shutoff to investigate the origin. Per Tim they have been told numerous times that it is an issue they need to resolve on their end. Paul went over to shutoff the water.	WT/SW	y	kw	5/1/20	10:19 AM
5/1/2020	3:48 PM	Javier	2021 44th Street	(219) 545-2528	Restorations	lp	said grass was gouged out from loader picking up large stumps in parkway. Wants to know if we will repair that. Done.	Street	y	bkb		
5/4/2020	7:53 AM	Curatolo	3203 Farmer Drive	(219) 934-0851	Other: See Notes	lp	says the fire hydrant is leaking water.	WT/SW				
5/4/2020	8:04 AM	Michelle Arnold	2916 Franklin	(219) 644-5962	Pot Hole	kw	Resident is asking if the potholes in the alley can be taken care of..Sean did it today.	Street	y	bkb		
5/4/2020	9:41 AM		3440 41st Place		Other: See Notes	lp	the street in front of her driveway is "crumbling" if someone can go take a look at it. Pot hole was filled in front of her driveway.	Street		bkb		
5/4/2020	12:21 PM	Charles Applegate	3625 Condit	(219) 384-6674	Tree/Branch Issues	kw	Branches have been out for 3 weeks. He said he is on a culdesac and typically has to call because we don't take the big truck down that street.The problem is that they are put in the wooded area at the end of the deadend which can make them hard to see...we will get them tomorrow.	Street	y	bkb		
5/4/2020	12:29 PM	Kym Lazonel	8121 Duluth St	(219) 614-1140	Garbage Can Replacement	kw	Texted Eric					
5/4/2020	1:52 PM	Nancy Reichelt Plumbing	3140 Lakeside Drive	(219) 322-4906	Other: See Notes	lp	sewer inspection needed Tuesday may 5. spoke to tim someone can go between 2-2:30pm. Called in and cancelled due to weather. Will call back to reschedule for another day.	WT/SW				
5/5/2020	2:30 PM		3237 Martha Street		Garbage not picked up	lp	garbage was missed messaged eric		y	lp	5/5/20	2:30 PM
5/6/2020	7:54 AM		9246 Highland Place		Garbage not picked up	lp	garbage was missed messaged eric		y	lp	5/6/20	7:54 AM
5/6/2020	10:05 AM	Heather	9014 Kleinman Road	(219) 808-3553	Mailbox damaged	lp	mailbox was damaged by plow last snow. Needs to be repaired. Gave to Jeff to repair.	Street	y	bkb		
5/6/2020	11:21 AM	Lori Makrowski	8939 Cottage Grove Pl	(219) 805-6842	Dead Tree/Status?	lp	called on 4/27/20 in regards to dead trees in the parkway if they can be looked at and resident be called in regards to them Russell is removing tree	mark	y	mk	5/11/20	11:41 AM
5/6/2020	11:21 AM	Lisa	3513 Duluth Place		Garbage not picked up	lp	garbage was missed messaged eric		y	lp	5/6/20	11:22 AM
5/6/2020	11:41 AM		3011 Lakeside Dr		Sewer Backup	kw	has water coming up from the basement floor drain. Sent Dan to check the main	WT/SW	y	kw	5/6/20	11:42 AM
5/6/2020	11:50 AM	Jeffery Marsh	3421 Garfield	(219) 923-8525	Pot Hole	kw	Asking if the holes in the alley can be gravel filled.	Street				
5/6/2020	11:51 AM	Nancy Reichelt Plumbing	3140 Lakeside Drive	(219) 322-4906	Other: See Notes	kw	Tomorrow at 2pm for sewer repair inspection.	WT/SW				
5/6/2020	1:00pm		3524 42nd Place		Garbage Can Replacement	lp	has a damged garbage can that needs to be replaced. Alos has a small recycle bin and would like the reg size can. Messaged eric		y	lp	5/6/20	1:18 PM
5/6/2020	3:11 PM		3430 Condit Street		Leaves Pickup	lp	has leaves in parkway to be picked up. They are not bagged but said they came and picked her neighbors up last week with the vac so she is not bagging them.The leaf vac was not out last week and it is not going out...they need to bag them.	Street	y	bkb		
5/8/2020	3:48 PM		3705 Highway		Branches Missed	kw	Branches have been out for a week :)..This is not branches it is yard waste with some sticks mixed in, they need to bag that, it cant go thru the chipper.	Street	y	bkb		
5/11/2020	9:03 AM	Darryl	2604 40th Street		Sewer Backup	lp	resident stated the drain in back yard is backing up sewage. Wants to have us look to see if it's on our end.	WT/SW				
5/11/2020	2:16 PM		7927 Duluth Street		Branches Missed	lp	branches have been out there for two weeks now and have been missed..Picked up.	Street	y	bkb		
5/11/2020	3:12 PM		3611 42nd Place		Leaves Pickup	lp	resident has bagged leaves that need to be picked up. They are gone.	Street	y	bkb		
5/11/2020	3:35 PM		3535 Wirth Road		Leaves Pickup	lp	resident is putting out about 25-30 lawnbags full of leaves on Wednesday and wants us to pick them up. She said she is putting them at the end of her driveway so she doesn't kill the grass	Street				

5/12/2020	7:35 AM		2904 Garfield		Garbage not picked up	lp	garbage was missed messaged eric		y	lp	5/12/20	7:35 AM
5/12/2020	7:37 AM		2904 Garfield	(219) 576-2881	Snow Plow Damage	lp	resident said that we hit her driveway with the plow came and cleaned it up but still isn't fixed. Wants to know when it will be fixed if someone can call her. Talked and meet with resident and explained we can not put asphalt back in the curb line where it meets up with the driveway because of it being a safety hazard for the snow plows.	Street	y	bkb		
5/12/2020	10:04 AM		8304 Liable Road		Branches Missed	lp	said he has had branches out front for the past two weeks and they haven't been picked up.They have been picked up.	Street	y	bkb		
5/12/2020	10:42 AM		3410 Condit Street		Garbage not picked up	lp	garbage was missed messaged dave		y	lp	5/12/20	10:42 AM
5/12/2020	10:53 AM		8434 5th Place		Garbage Can Replacement	lp	garbage can has crack down the middle of it. Messaged dave to get can swapped out		y	lp	5/12/20	10:54 AM
5/12/2020	12:07 PM		8346 Liable		Branches Missed	kw	Picked up.	Street	y	bkb		
5/12/2020	12:44 PM		3503 43rd Place		Branches Missed	lp	has had branches out for over 10 days and have been missed…See comment #240	Street	y	bkb		
5/13/2020	7:40 AM	McGuire	8954 Schneider Ave		Garbage not picked up	lp	whole block of schneider garbage was missed. Messaged dave		y	lp	5/13/20	7:42 AM
5/13/2020	9:45 AM		9615 Farmer Drive		Pot Hole	lp	before you pull into the parking lot in the street there is a large pot hole. Gave to Dennis to fill.	Street	y	bkb		
5/13/2020	12:00 AM		3424 42nd St		Branches Missed	kw	neighbors branches were picked up today but not theirs?? This was left for a loader stop, but I will check anyway.	Street	y	bkb		
5/13/2020	2:06 PM		3111 Eder Street		Branches Missed	lp	branches have been out there for two weeks now and have been missed.This was left for a loader stop.	Street	y	bkb		
5/13/2020	2:09 PM		3503 43rd Place		Branches Missed	lp	has had branches out for awhile now they have not been picked up. Guy stated he is going to set the sh*t on fire in his parkway if they are not picked up. Wanted to leave a voicemail for brian.They were picked up…tho I would have enjoyed a good bonfire.	Street	y	bkb		
5/13/2020	3:12 PM		2736 Glenwood Street		Snow Plow Damage	lp	said there is damage in the alley by his garage from plow damage and it has gotten worse.	Street				
5/14/2020	10:06 AM	Bryan Wiesemann	3420 41st Place	(219) 308-6912	Dead Tree/Status?	lp	resident haws a possible dead tree in parkway dropping huge limbs if you can take a look at it and call them back and let them know. Was just following up hasn't heard anything yet. If you could call him in regards to that.	mark				
5/14/2020	10:11 AM		8822 Woodward		Leaves Pickup	lp	resident has bagged leaves out on the curb that need to be picked up.Gave to Jeff.	Street	y	bkb		
5/14/2020	10:41 AM		2714 43rd Street		Other: See Notes	lp	needs a sewer inspection some time today. Told her they are on a water main break and might not be until later.	WT/SW				
5/14/2020	3:00 PM		3003 97th Pl		Other: See Notes	kw	Hole that was filled in the back, in the parking lot, from the Water Main Break has sunk and is quite large. Also wanted to know when the restorations would be taken care of will fill hole again today then needs hot patched when Brian has time	WT/SW				
5/14/2020	3:12 PM	Catherine Kutcka	3519 41st place		Water Meter	lp	just had basement water proofed and repainted floors said there is rust under the water meter now and on of their pipes by the laundry room was leaking. She thinks this is all because of the meter. She just had a new on in september. Wanted to speak to a supervisor in regards to this.will have Paul check this	WT/SW				
5/15/2020	10:36 AM		3148 Eder Street		Drainage Issues	lp	resident stated about 12 years ago their street was repaved but it was never finished. She said it's not high enough for the water to flow to the sewers so when it rains the whole street floods. If someone can take a look at it	Street				
5/15/2020	11:28 AM	Linda Lawbaugh	3613 45th Street	(219) 924-9228	Other: See Notes	lp	was supposed to get a water shut off put in a month ago was wondering when that was going to happen. On schedule maybe this week depending on weather and emergencies, spoke with resident	WT/SW				
5/15/2020	1:41 PM	Heather Herrera	9014 Kleinman Road	(219) 808-3553	Drainage Issues	lp	resident is calling in regards to the ditch in front of her house is really high and overflowing into her yard. Wants a supervisor to come take a look at it and fix the issue. Aaron going to go take a look at it	WT/SW				
5/18/2020	9:36 AM	Mike Cardone	3743 Alti Ct	(773) 574-5947	Other: See Notes	kw	The sand from the Water Main Break last week has sunk and there is now a large hole	WT/SW				
5/18/2020	9:44 AM		3640 44th St		Drainage Issues	kw	Check main, they have backup in the house. Gave to Aaron	WT/SW				
5/18/2020	9:44 AM		8727 Cottage Grove Ave		Drainage Issues	kw	Check main, they have backup in the house. Gave to Aaron	WT/SW				
5/18/2020	9:45 AM		2440 Martha St		Drainage Issues	kw	Check main, they have backup in the house. Gave to Aaron	WT/SW				
5/18/2020	9:45 AM		43rd and 5th St		Drainage Issues	kw	Standing water in the street, check main. Gave to Aaron	WT/SW				
5/18/2020	12:00 AM		2126 41st Pl		Garbage Can Replacement	kw	Garbage can damaged, needs a new one. Sent message to Dave		y	kw	5/18/20	10:09 AM
5/18/2020	11:13 AM		8732 Woodward		Leaves Pickup	lp	resident has bagged leaves that need to be picked up.Grant will pick them up.	Street	y	bkb		
5/18/2020	1:59 PM		8716 Carolina		Leaves Pickup	lp	resident has bagged leaves that need to be picked up.Grant will pick them up.	Street	y	bkb		
5/19/2020	10:17 AM		2651 Glenwood Street		Garbage Can Replacement	lp	needs both garbage and recycle bins swapped out. Messaged dave		y	lp	5/19/20	10:18 AM
5/19/2020	12:19 PM		8203 Sycamore		Branches Missed	kw	Been out for a week, wanted to make sure they were picked up on today's route.Branches were picked up.	Street	y	bkb		
5/19/2020	1:18 PM		3206 Condit Street		Leaves Pickup	lp	has it bagged but in a plastic trash can outside so bags didn't get wet if someone can pick those up..picked up.	Street	y	bkb		
5/19/2020	1:37 PM	Michal Lawrence	8153 Sycamore Ave	(219) 588-6894	Drainage Issues	lp	can someone check the sewer cleanout in the front. Said water from backyards are draining but wants to make sure nothing is clogged in the cleanout. Said someone from here told him yesterday we would come by.	WT/SW				
5/19/2020	2:34 PM	Joseph Rodrigues	2735 Grand Blvd.	(219) 923-6517	Other: See Notes	kw	divide of this property and Crowel Agency behind the animal groomer there is a large dip in a "alley way". Also the alley behind this property is inquiring about blacktopping this alley, do we do this? Is requesting the alley to please be graded and graveled.	Street				
5/20/2020	8:03 AM	Klocek	3345 Grand Blvd		Garbage not picked up	lp	garbage was missed messaged eric		y	lp	5/20/20	8:03 AM
5/20/2020	1:13 PM		2653 Parkway Drive	(708) 707-5472	Drainage Issues	lp	said she came downstairs to an inch of water in her basement, hasn't been down there since Sunday night so doesn't know if it's a sewer back up or from a hot water heater. Gave to keith hes going to check our end.	WT/SW				
5/20/2020	1:31 PM		8417 Parrish Ave		Leaves Pickup	lp	has bagged leaves that need to be picked up.Picked up.	Street	y	bkb		
5/20/2020	1:52 PM	Phil Sawyer	9031 Liable Road	(219) 801-1567	Other: See Notes	lp	has one more question for you in regards to the information you gave him Tuesday if you could call him back when you have a minute	Mark				
5/20/2020	2:51 PM		9619 Delaware Pl		Sink Hole	kw	Sink hole about 4 feet from manhole cover on the side of the house in the easement	WT/SW				
5/21/2020	9:08 AM		3829 Jewett		Branches Missed	lp	branches were missed Monday. Neighbor is giving her issues was wondering if we can swing back through and ge those ..picked up.	Street	y	bkb		
5/21/2020	9:32 AM		2712 Duluth		Garbage not picked up	lp	garbage was missed messaged eric		y	lp	5/21/20	9:32 AM
5/21/2020	1:10 PM		3036 98th Place West		Garbage Can Replacement	lp	Garbage can damaged, needs a new one. Sent message to eric		y	lp	5/21/20	1:11 PM
5/21/2020	2:45 PM		Duluth and Kennedy 2816 duluth		Other: See Notes	kw	There is a speed limit sign in front of a residence at this location that is obstructed by tree limbs. Resident said it use to be closer to the alley and is asking if it can be relocated back to the original spot. It makes it hard for him to cut his grass	Street				
5/22/2020	10:01 AM	Zachary Jones	3902 Wicker?	(863) 838-9530		kw	Has a plumber coming out next week for a sump pump. Plumber told him it looks like the old sump pump is tied in to the Sanitary line and he wants to know if the town shares the expense to rectify that issue.	John Bach				
5/22/2020	11:01 AM	Wendy Ross	2652 Eder	(219) 923-9847	Restorations	kw	Cones are still blocking off where sand was put down for a water main break last year. Resident would like to know when the restorations can be expected. Please call Bob has done the restoration and picked up the cones	WT/SW	y			
5/22/2020	11:55 AM		2714 Wicker Ave		Pot Hole	lp	alley between wicker and clough has a few holes from the rain this past week.Will add to list to do .	Street	y	bkb		
5/22/2020	12:31 PM		45th street		Dead Animal	lp	dead possum on 45ht in the middle of the street by vytos. Gave to Dylan.	Street	y	bkb		
5/26/2020	7:38 AM	Don	9930 Northwood Ct	(219) 934-9495	Branches Missed	lp	resident had branches out Friday and they were not picked up, if someone can pick those up. Picked up.	Street	y	bkb		
5/26/2020	8:20 AM		8000 Duluth Street		Other: See Notes	lp	Called and wants the grass behind her house mowed she said it is knee deep. Says the town mows it .If this is her address it does not exist, this would be the west side of Duluth and we don't mow back there at all.	Street	y	bkb		

5/26/2020	9:09 AM		2049 38th Street		Other: See Notes	lp	said his sewer had a lot of debris wants to know if we can check to see if it needs to be cleared out said one across the street is fine. So thinks there might be an issue	WT/SW				
5/26/2020	9:24 AM	Jacqueline Jimenez	3424 Ross Pl	(219) 765-4201	Dead Tree/Status?	kw	Resident thinks the tree is dead, please check. Russel to remove	Mark	y	mk	5/27/20	1:00pm
5/26/2020	9:32 AM		3122 Lincoln Place		Branches Missed	lp	resident has had branches out for two weeks and has been missed. Dennis got them.	Street	y	bkb		
5/26/2020	9:50 AM	Amy Salazar	3117 43rd Street	(219) 688-5697	Tree/Branch Issues	lp	neighbor told her the town came to her door in regards to removing trees on their parkways due to the sewers was just calling to get more information in regards to it. Not removing her trees	Mark	y	mk	6/2/20	10:21 AM
5/26/2020	10:06 AM		8015 Duluth Street		Tree/Branch Issues	lp	behind his house is town property and a huge branch fell down. Needs to be chopped up to remove it.	Street				
5/26/2020	11:08 AM	Raymond Haack	9947 Delaware Pl	(219) 924-9338	Other: See Notes	kw	1/3 of the backyard has been flooded for awhile and it looks like an oil slick (grayish and foamy)	WT/SW				
5/26/2020	12:33 PM		2728 Duluth Street		Garbage Can Replacement	lp	garbage can needs to be replaced, messaged eric		y	lp	5/26/20	12:33 PM
5/26/2020	3:04 PM	J Chapman	2705 Ross Street	(219) 838-2852	Sidewalk/Curb Issue	lp	sidewalk is lifted in an area said someone came out and looked at it , said we would take care of it and nothing has been done. Had an elderly lady fall and possibly broke her wrist and said if it is broken he is coming after us. Can someone please call him back					
5/27/2020	8:42 AM		3744 42nd place		Dead Animal	lp	dead raccoon in street on 42nd place off of kleinman. Texted jeff	Street	y	lp	5/27/20	8:43 AM
5/27/2020	9:06 AM		2921 98TH Street		Garbage Can Replacement	lp	resident has cracked garbage can. Texted eric		y	lp	5/27/20	9:07 AM
5/27/2020	9:19 AM		Industrial and Priarie		Other: See Notes	lp	said town right away hasn't been mowed in 3 weeks wants to know if it can be done soon…we don't mow anything at this location.	Street	y	bkb		
5/27/2020	12:32 PM		Cline Ave		Dead Animal	lp	southbound cline ave there is a dead possum almost in the turn lane right before wirth road. Dylan is getting it.	Street	y	bkb		
5/27/2020	1:27 PM		3510 Laverne Drive		Other: See Notes	lp	called and said the empty lot next to her has yet to be mowed this year and that we mow it. Said it is bad and needs to be done. Most of it has been mowed, the rest is to wet to get to for now.	Street	y	bkb		
5/27/2020	2:12 PM		8232 Kennedy Ave		Sink Hole	lp	owner at happy tails says there is a sink hole in the alley..sent Bob over to fill and level off.	Street	y	bkb		
5/28/2020	9:27 AM		hart and martha		Sink Hole	lp	resident called and said there appears to be a big sink hole off of hart when you're turning to head towards the cul de sac part of martha. I told her those two streets don't cross but she insisted it was by the two.This Is Hook and Martha and WT/SW are aware of it.	Street	y	bkb		
5/28/2020	9:27 AM	Jeff	3315 41st Pl	(219) 629-4685	Branches Missed	kw	He has seen the chipper truck go by the last two days and they are not picking up the branches??? Resident rented a bucket truck and him and his buddy took the tree down. He has receipts for the bucket truck if we need to see them. Brian will get it as a loader stop tomorrow, resident informed.	Street	y	kw	5/28/20	2:45 PM
5/28/2020	10:30 AM		2047 Ramblewood Drive		Other: See Notes	lp	resident said he had water shut off at bbox and now his water pressure is low after having it turned back on. Wants someone to take a look and see if it was turned back on all the way.box was hard to turn not on all the was taken care of	WT/SW	y	tg		
5/28/2020	10:56 AM	Steven Lashbrook	2501 Martha Street	(219) 789-4619	Water Meter	lp	water meter making a loud humming noise when water is on. Can someone get in contact with him to take a look at it. Paul will change the meter tomorrow at 9am.	WT/SW	y	kw	5/28/20	11:48 AM
5/28/2020	11:33 AM	Heather Grigson	2040 Azalea Dr	(219) 924-2169	Dead Tree/Status?	kw	Has 2 trees in the parkway that she believes are dead. Please check	mark				
5/28/2020	1:18 PM		3051 Lakeside Drive		Branches Missed	lp	had branches out last week for Thursday route and they were missed wants to make sure they get picked up today.	Street	y	bkb		
5/29/2020	8:41 AM		2714 Lincoln Street		Pot Hole	lp	big pot hole in street…This is a small sink hole next to a catch basin and has a barricade.	Street	y	bkb		
5/29/2020	9:31 AM	Joan	3123 98th Place	(219) 924-2933	Dead Tree/Status?	lp	there are two trees in the parkway and they both seem to be dropping big branches. Trees might be dead. One on west side seems to be worse than the other. Left message trees not dead but need pruning	mark	y	mk	6/2/20	11:03 AM
5/29/2020	9:47 AM	Sophie Jencopale	8421 Cottage Grove Ave	(219) 838-5101	Dead Tree/Status?	lp	3 trees in the parkway. Seems to be dying from the top down and neighbors are worried about it with having kids. Can you look at that please 1 of the 3 trees are dead and we will remove	mark	y	mk	6/2/20	3:22 PM
5/29/2020	10:20 AM	Brent Leffel	2909 Condit Street	(219) 808-9209	Other: See Notes	lp	contiunous standing water things bbox may be leaking.called paul he is going to look at it. Leak on residents side of b-box he has been notified	WT/SW	y	pb		
5/29/2020	10:57 AM		8532 Kennedy Ave		Other: See Notes	lp	northbound in the right hand lane there is a ton of garbage in the road looks like someone threw a bag in the street and it has busted open. Jeff cleaning up	Street	y	lp	5/29/20	11:25 AM
5/29/2020	3:47 PM		3508 Highway Ave		Other: See Notes	kw	Resident is asking if his bbox can be lowered. He keeps hitting it with the lawnmower, says it sticks way up out of the ground	WT/SW				
6/1/2020	8:18 AM		3540 Wirth Road		Dead Animal	lp	dead possum. Texted jeff	Street	y	lp	6/1/20	8:18 AM
6/1/2020	8:22 AM	Karen Stamos	2711 38th Street	(219) 972-1118	Restorations	lp	had to find a water shut off tore up side walk and front yard looking for it and it has yet to replaced. Wants to know when it will be replaced. Resident was notified concrete would be poured this week	WT/SW				
6/1/2020	8:59 AM		2033 38th Street		Locate Lines/B-box	lp	needs bbox locatted. Box has been marked	WT/SW	y	pb		
6/1/2020	10:01 AM	Margaret	3533 41st Place	(219) 924-5332	Leaves Pickup	lp	has bagged leaves that need to be picked up.Been picked up	Street	y	bkb		
6/1/2020	10:26 AM	Richard	3010 Franklin	(219) 972-9066	Dead Tree/Status?	lp	has a dead tree in the parkway down the street on the corner of 5th and franklin on the corner. Tree seems to be dead and dropping big branches. Tree is on franklin on southside of street. Tree is dead Russel to remove	mark	y	mk	6/2/20	10:16 AM
6/1/2020	10:53 AM	Lori	8939 Cottage Grove Pl	(219) 381-6035	Restorations	lp	had a tree cut down in the parkway still has mulch in the front yard wants to know when that will be taken care of and has a few more questions in regards to that if you can call her. Russel will get today	mark	y	mk	6/2/20	7:13 AM
6/1/2020	11:10 AM		9547 Farmer Drive		Leaves Pickup	lp	has bagged leaves out for pickup..they gone.	Street	y	bkb		
6/1/2020	1:21 PM		3511 44th Street		Leaves Pickup	lp	resident has bagged leaves out for pickup.They gone.	Street	y	bkb		
6/1/2020	1:39 PM		3533 Franklin Street		Branches Missed	lp	has had branches out for 3 weeks now. Wants to make sure they get picked up today ..They were picked up.	Street	y	bkb		
6/1/2020	2:41 PM		3437 Franklin Street		Branches Missed	kw	chipper went by and they didn't pick up the branches.Not missed they were picked up.	Street	y	bkb		
6/2/2020	9:43 AM		3843 Ridge Road		Branches Missed	lp	pickup day is Monday. Branches were missed yesterday.picked up	Street	y	bkb		
6/2/2020	11:14 AM	Ted Hammer	9520 Kennedy Ave	(219) 213-0383	Other: See Notes	kw	No room in the Parkway for branches, home is next to Cavalry Baptist Church and branches are accessible from their lot. Will we pick these up?	Street	y	bkb		
6/2/2020	12:29 PM		2048 Ridge Road		Branches Missed	lp	branches have been out over a week wants them picked up.They were picked up.	Street	y	bkb		
6/3/2020	9:13 AM		2845 37th Place		Garbage Can Replacement	lp	resident lost can in truck needs replacement. Spoke to eric they are out of cans and their shipment has been delayed which is delaying turn around time for new cans 6/8/20 John dropped a used can off to her		y	lp	6/3/20	9:14 AM
6/3/2020	10:47 AM		3914 Highway Ave		Pot Hole	lp	had pot hole filled in front of house but said it was not filled all the way…this a spot they are hot patching from a water break, they arent done yet.	Street	y	bkb		
6/3/2020	2:56 PM		3425 Franklin Street		Leaves Pickup	lp	has bags of leaves out that need to be picked up.Gave to Jeff and Dennis	Street	y	bkb		
6/3/2020	3:38 PM		2944 Garfield Ave		Dead Animal	lp	dead possum in easement behind garfield ave ..gave to Jeff.	Street	y	bkb		
6/4/2020	9:51 AM	Christenson, Ervy	3220 Martha Street	(219) 781-5606	Dead Tree/Status?	lp	has a possible dead tree in parkway. Needs to be looked at.	mark	m	mk		
6/5/2020	8:53 AM	Arc (nipsco work)	2934 Lincoln Street		Other: See Notes	lp	hit an unmarked water line. Called tim has been repaired	WT/SW	y	tg		
6/5/2020	9:11 AM	Louise	9546 Manor Dr	(219) 922-6069	Restorations	lp	grass was tore up by plow in the winter. They came out to fix it but the ground is not level and looks bad. She wants to know if we can put down more dirt and see to level out the ground.	Street				

6/5/2020	9:17 AM	Jose	2450 Martha Street	(219) 501-6225	Other: See Notes	lp	thinks sewer line is collapsed. Can someone take a look at it. Messaged aaron to take a look at it.	WT/SW				
6/5/2020	9:59 AM	Jasmine	3034 Glenwood Ave	(219) 402-4483	Branches Missed	lp	tree branches were missed on Monday. Resolved	Street	y	bkb		
6/5/2020	10:30 AM		3031 Duluth Street	(708) 705-2622	Tree/Branch Issues	lp	resident says that she had a plumber out and they found tree roots from the parkway in the sewer system. Wants us to take a look at it because she cannot afford to have a lumber out every other week to come look at her sewer	mark	y	mk		
6/5/2020	10:35 AM		3527 44th Pl	(773) 307-4187	Sewer Backup	kw	Resident has sewer backup in the basement. Aaron is checking the main our main is clear resident has been notified	WT/SW	y	ak		
6/8/2020	8:58 AM		Ridgewood/Branton		Other: See Notes	lp	manhole cover seems to be loose. Getting louder when cars drive over it. Wants someone to take a look at it. Paul is checking	WT/SW				
6/8/2020	9:14 AM	Sharon	2037 Wildwood Circle	(219) 924-8925	tree/Branch Issues	lp	tree removal on easements on essex point wants to call to know when this will happen. Advice on a few private street repair. Wanted to touch base with you.	Mark	y	mk		
6/8/2020	9:25 AM	Zach Paz	8332 Gordon Dr		Garbage Can Replacement	lp	new resident, has a recycle bin but no garbage can, messaged eric		y	lp	6/8/20	9:26 AM
6/8/2020	11:22 AM		2700 Clough Ave		Pot Hole	lp	alley has a lot of pot holes ..on our list to do.	Street	y	bkb		
6/8/2020	12:04 PM	Katie Parks	3739 Wicker Ave	(219) 616-3532	Branches Missed	kw	been out since last Sunday, missed last week. They were picked up.	Street	y	bkb		
6/8/2020	1:00 PM	Robert Cope	3501 44th Street	(219) 513-9434	Tree/Branch Issues	lp	has a tree in the parkway that might be dead. Dropping a lot of leaves if you can take a look at it and let her know.	mark				
6/8/2020	1:15 PM	Mary	3500 Block of Highway	(219) 512-6630	Other: See Notes	kw	South side of the street - alley has large holes and floods..will add to our list, hopefully later this week or next week.	Street	y	bkb		
6/8/2020	2:14 PM	Daisy	3133 Strong Street	(219) 746-7860	Restorations	lp	they did work in the parkway (water main break) parkway has yet to be restored.on our list hopefully next week, left a message on answering machine	WT/SW				
6/8/2020	2:49 PM		9930 Northwood Ct		Branches Missed	lp	branches were missed Friday..picked up	Street	y	bkb		
6/8/2020	4:00 PM	Keith Walter	3025 Duluth St	(219) 923-3084	Branches Missed	kw	watched the truck go right past the culdesac, did not come down and pick up their branches.They were picked up.	Street	y	bkb	bkb	
6/9/2020	8:27 AM		Highway and Park Drive		Other: See Notes	lp	sink hole starting to form in street by sewer	WT/SW				
6/9/2020	9:34 AM		8345 Delaware Street		Branches Missed	lp	said had branches out ,,Been picked up.	Street	y	bkb		
6/9/2020	9:35 AM	Annalee	2437 Wicker Ave	(630) 886-9491	Tree/Branch Issues	lp	has a dead tree in parkway if it can be looked at ..Tree not dead	mark	y	mk		
6/9/2020	9:55 AM		4th St/Norman St		Sink Hole	kw	Sink hole by sewer at this location basin has been repaired	WT/SW	y	tg	6/10/20	
6/9/2020	1:03 PM	Kathleen Jage	8957 Cottage Grove Ave	(219) 923-6263	Tree/Branch Issues	lp	having issues with roots uplifting the sidewalk said she called in before but no one called her back	mark	y	mk		
6/10/2020	8:21 AM	Alejandra Coss	3114 100th Place	(773) 656-9845	Tree/Branch Issues	lp	has a dead tree in parkway if it can be looked at	mark	y	mk		
6/10/2020	8:29 AM		2833 37th Place		Sink Hole	lp	sink hole forming right before driveway..Put a verticade over it and notified Tim.	WT/SW	y	bkb		
6/10/2020	12:25 PM		9007 Richard Street		Tree/Branch Issues	lp	has a big branch that came down its in the alley, resident said it was too big and heavy to move to front of the house if we can get it from the alley.Picked up.	Street	y	bkb		
6/10/2020	12:39 PM	Joanna	3429 42nd Street	(219) 614-2652	Tree/Branch Issues	lp	tree in the parkway is dropping a lot of branches. Wants a call back to know status	Mark	y	mk		
6/10/2020	2:14 PM		3316 Farmer Drive		Pot Hole	lp	pot hole in street	Street				
6/10/2020	3:17 PM	Linda	2943 42nd Street	(219) 718-3841	Tree/Branch Issues	lp	tree in the parkway is dead	Mark	y	mk		
6/11/2020	10:37 AM		2150 Martha Street		Tree/Branch Issues	lp	tree in parkway has a branch that is hanging over the road. If we can get it resident is elderly ..Taken care of.	Street	y	bkb		
6/11/2020	11:10 AM		2832 38th Street		Tree/Branch Issues	lp	derek called said two trees in their parkway are dead and need to be removed	Mark	y	mk		
6/11/2020	11:12 AM	Margaret	3321 Garfield	(219) 228-0356	Tree/Branch Issues	lp	is closing on the house on Monday having buyers walk through for final this weekend has a big branch in front that needs to be picked up wants to know if we can get that for them. Loader stop,on the list for Friday.	Street	y	bkb		
6/12/2020	9:33 AM	Louise	9546 Manor Drive	(219) 922-6069	Restorations	lp	grass was tore up by plow in the winter. They came out to fix it but the ground is not level and looks bad. She wants to know if we can put down more dirt and see to level out the ground. This is the 3rd time calling and wants someone to come fix it.Hopefully next week since we are busy with storm damage..its on our list of things to do.	Street	y	bkb		
6/12/2020	9:58 AM		ridge road		Tree/Branch Issues	lp	big branch in front of american legion next to ridge road if someone can pick it up.picked up	Street	y	bkb		
6/12/2020	12:29 PM		2736 Glenwood Street		Pot Hole	lp	pothole in alley by garage..Dennis filling and will hot patch at a later date.	Street	t	bkb		
6/12/2020	12:41 PM	Gina	3019 Franklin Street	(219) 281-1528	Restorations	lp	has a sewer cover in her parkway. Ground around it seems to be sunken in a bit. Wants to know if we can add dirt and build it up do no one trips in it	WT/SW	y	br	6/15/20	
6/12/2020	2:27 PM		2914 44th Street		Branches Missed	lp	branches are on thursdays route and were not picked up..Picked up.	Street	y	bkb		
6/15/2020	8:13 AM		2110 Birchwood Lane		Branches Missed	lp	branches were missed Friday.	Street	y	bkb		
6/15/2020	9:25 AM		10144 Idlewild Lane		Branches Missed	lp	branches were missed on fridays route	Street	y	bkb		
6/15/2020	10:09 AM	Mary Knight	2700 Clough Ave/Alley	(219) 923-7828	Pot Hole	kw	Big, deep hole on the west end of the alley making it difficult to get cars through..Sean graded today 6/22/20.	Street	y	bkb		
6/15/2020	11:24 AM		2914 44th Street		Branches Missed	lp	branches were missed has lawn company coming Wednesday and they will not move the branches to mow	Street	i	bkb		
6/15/2020	2:48 PM		3851 Jewett Ave		Branches Missed	lp	branches were missed. Has called several times for them to be picked up. Can someone please get these	Street	y	bkb		
6/15/2020	3:09 PM		kleinman		Other: See Notes	lp	logs blocking the ditch on the west side of the bridge on kleinman. Mark can you please contact the people from lake county on that issue	Mark	y	mk		
6/15/2020	3:29 PM		9403 5th Street		Garbage Can Replacement	lp	needs a recycle bin swapped out messaged eric		y	lp	6/15/20	3:30 PM
6/15/2020	3:52 PM		2117 Ramblewood Drive		Branches Missed	lp	branches were missed on fridays route	Street	y	bkb		
6/16/2020	10:16 AM		2701 North Drive		Garbage Can Replacement	lp	garbage can damaged. Messaged eric		y	lp	6/16/20	10:17 AM
6/16/2020	11:23 AM	Blissmer, Karen	9008 Pettit Drive	(219) 923-6206	Restorations	lp	had work done in her yard last year they replaced the grass. She called and said the grass is already dead. I told her that it was the homeowners responsibility to maintain the area and she said with all the rain it shouldn't be dead. Wants to know if someone can take a look at it and give her a call.	Mark	y			
6/16/2020	1:19 PM		3127 Condit Street		Other: See Notes	lp	sewer cap in the road is making a lot of noise when people drive over it thinks it might be loose if someone can take a look at it.tried to retar the casting it did not work it will need to be mortered	WT/SW	y	tw/kr	6/25/20	
6/16/2020	2:50 PM		3500 Highway Ave		Pot Hole	lp	pot holes in the alley says they always get neglected. Said she wont stop calling until it gets fixed. On my list, alley needs to dry out, plus 2 vehicles were in the way the other day when Sean tried grading it.	Street	y	bkb		
6/17/2020	12:28 PM	Dana York	robertson	(219) 501-8227	Other: See Notes	lp	has questions about the construction taking place on robertson.	Mark	y	mk		
6/17/2020	3:19 PM		3051 Lakeside Drive		Leaves Pickup	lp	has bagged leaves that needs to be picked up	Street	y	bkb		
6/18/2020			hill on jewett by 1st and 2nd street		Other: See Notes	lp	guy called saying when the guys mowed they mowed over garbage and twigs and it looked bad. If someone can go over there and clean up the mess	Street	y	bkb		
6/19/2020	7:32 AM		Kennedy and Main		Pot Hole	lp	big pot hole in street once you turn to go w bound onto main from kennedy ave it's on main in front of the entrance for mobile gas station...Filled.	Street	y	bkb		
6/19/2020	10:12 AM		2041 Bluebird Lane		Branches Missed	lp	has had branches out for 3 weeks and have not been picked up	Street	y	bkb		
6/19/2020	2:14 PM	Lisa	8542 Henry Street	(219) 793-4945	Dead Tree/Status?	lp	has a dead tree in the parkway if we can have it looked at.	Mark	y	mk		

6/22/2020	8:24 AM		9009 Highland Street		Branches Missed	lp	has had branches out for 2 weeks and have not been picked up..Picked up	Street	y	bkb		
6/22/2020	9:25 AM	Kyle Anderson	9416 Farmer Dr	(219) 775-4019	Other: See Notes	kw	This address has 2 large oak trees in the parkway that are raising the sidewalk. Neighbor called it in and said he saw 2 different children this weekend trip over the sidwalk and fell and skinned their knees	Street				
6/22/2020	9:30 AM		3202 Eder Street		Other: See Notes	lp	a lady who walks in that area said on the southeast corner of parrish and eder there are branches hanging very low over the sidewalk and wants to know if we can cut them so on one gets hurt trying to walk under them. We do not trim branches from trees unless they are damaged or broken and causing a hazard, these are trees that were cut by a utility company from there lines on the poles, and seems to look like thats the way they are growing, homeowners are responsible for maintaining the trees in parkways.	Street	y	bkb		
6/22/2020	10:33 AM		3844 Highway		Dead Animal	kw	Dead opossum middle of the road. Gave to Kevin	Street	y	kw	6/22/20	10:33 AM
6/22/2020	10:53 AM	Katie Nefs	9320 O'day Drive	(219) 308-7704	Dead Tree/Status?	lp	Neighbors tree in parkway called in concerned because it is dropping huge branches thinks it is dead. Needs Pruning	Mark	y	mk		
6/22/2020	10:55 AM		3024 Lakeside Dr		Branches Missed	kw	Resident is upset that her branches have been out for 2 weeks and has now killed the grass..picked up.	Street	y	bkb		
6/22/2020	10:59 AM		2633 Wicker Ave		Pot Hole	lp	pot holes in alley are really bad wants to know if we can grate alley.Graded today 6/22/20	Street	y	bkb		
6/22/2020	1:04 PM		3506 42nd Street		Branches Missed	lp	branches have been out for 2 1/2 weeks now. Said neighbors across the streets were picked up but not his...Picked up.	Street	y	bkb		
6/23/2020	8:01 AM		8146 Grace Street		Branches Missed	lp	branches were missed yeaterday..Dennis got them.	Street	y	bkb		
6/23/2020	11:33 AM	Jaqueline	3424 Ross Place		Dead Tree/Status?	lp	resident wants to know when her tree will be taken down said has called 3 times. Done	mark	y	mk		
6/24/2020	7:39 AM	Linda Lannon	3440 42nd Street		Branches Missed	lp	branches have been out for two weeks now..Picked up.	Street	y	bkb		
6/24/2020	8:37 AM	Krooswyk	2550 Industrial Drive	(219) 712-7943	Pot Hole	lp	pot hole close to krooswyk he said if they can't find it just call him.Repair has beem made.	Street	y	bkb		
6/24/2020	8:55 AM		2848 37th Place		Branches Missed	lp	has ha branches out for 3 weeks and are still out there..Picked up.	Street	y	bkb		
6/24/2020	8:57 AM		9347 Southmoor Ave		Branches Missed	lp	branches were missed on fridays route	Street	y	bkb		
6/24/2020	8:58 AM		9307 Grace Street		Garbage not picked up	lp	garbage was missed messaged eric					
6/24/2020	11:55 AM	Renee	wicker park memorial indy/ridge	(219) 678-3442	Other: See Notes	lp	needs water meter put in for wicker park memorial on ridge and indy. Please call to let renee know when meter is put in. Paul installed the meter last week.	WT/SW	y	kw		
6/24/2020	1:31 PM		9151 Grace Pl		Branches Missed	kw	and also guy down the street. Branches out for 2 1/2 weeks.They gone!	Street	y	bkb		
6/25/2020	3:10 PM		3052 Lakeside Dr		Branches Missed	kw	Never seen the truck go by today..Just because they didn't see the truck go by doesn't mean it didn't go by.	Street	y	bkb		
6/25/2020	3:51 PM		9347 Southmoor Ave		Branches Missed	lp	had branches out since last week wants to make sure they are picked up tomorrow.Taken care of.	Street	y	bkb		
6/26/2020	8:30 AM		2824 Eder Street		Pot Hole	lp	really big pot holes in alley ..Grant filled them.	Street	y	bkb		
6/26/2020	11:35 AM		9144 Cottage Grove Pl		Other: See Notes	kw	Did we pick up the street sign Cottage Grove Pl/Martha St that was knocked down? It disappeared yesterday.Yes.	Street	y	bkb		
6/26/2020	12:16 PM		3724 Alti Ct		Branches Missed	kw	Branches have been out for 3 weeks. This is a culdesac. Please pick up..picked up	Street	y	bkb		
6/26/2020	1:22 PM		9928 Branton Ave		Branches Missed	lp	branches were missed passed 2 weeks. No branches	Street	y	bkb		
6/26/2020	2:30 PM		2146 Terrace Drive		Branches Missed	lp	branches have been out there for over 2 weeks now. No branches	Street	y	bkb		
6/29/2020	10:26 AM		3520 Garfield		Other: See Notes	lp	storm sewer on south side of the street in the middle of the block . The sidewalk close to it is sinking. Wants someone to take a look at it. Called locates	WT/SW				
6/29/2020	12:50 PM		9523 O'day Drive		Sink Hole	lp	sink hole in parkway by the sewer. Sent Kyle to check it out.	WT/SW	y	bkb		
6/29/2020	12:52 PM		9540 O'Day Drive		Sink Hole	kw	There was a water break during the winter. The parkway has settled and there is now a large sink hole. Resident would like it filled and restored.Gave to Jim and Gavin	WT/SW	y	bkb		
6/29/2020	1:36 PM	Marion	8304 Liable Road	(219) 794-4929	Water On/Off Req.	lp	has a plumber coming at 10am Thursday 7/2/2020 needs water shut off before then. Paul has it under control	WT/SW				
6/29/2020	3:16 PM		2132 Teakwood Circle		Sink Hole	kw	Sink hole in the back by an electrical box, the box is laying on the ground. Resident believes a sewer line runs back there..Gave to Kyle to check out.	WT/SW	y	bkb		
6/30/2020	11:10 AM		8120 Johnston		Branches Missed	lp	branches were missed on mondays route	Street	y	bkb		
6/30/2020	11:20 AM		strong and 5th street		Other: See Notes	lp	branch from tree hanging over street ..Sean will cut it down.	Street	y	bkb		
6/30/2020	12:37 PM		3414 41st St		Other: See Notes	kw	Additional dirt and seed needed from backyard drain project. Resident brought in pictures, definitely spotty.Gave to Jim and Gavin.	WT/SW	y	bkb		
6/30/2020	1:52 PM		9028 Kennedy Ave		Branches Missed	lp	branches missed ..branches gone.	Street	y	bkb		
6/30/2020	1:59 PM	Greg	8120 Johnston Street	(219) 923-6366	Locate Lines/B-box	lp	needs bbox locatted for next Tuesday.Gave to Paul Paul couldn't locate, resident needs this done before Tuesday. General location facing west in the backyard, 2 trees in the middle, approx. 3-4 foot left of the tulip tree. Has been found	WT/SW	y	bkb		
6/30/2020	3:21 PM	Amy	9715-17 5th Street	(219) 313-6040	Sink Hole	lp	sink hole by appartment around sewer, called in by property manager..Gave to Kyle.	WT/SW	y	bkb		
6/30/2020	3:22 PM	amy	9949 Kennedy Ave	(219) 313-6040	Sink Hole	lp	sink hole by appartment around sewer, called in by property manager .Gave to Kyle.	WT/SW	y	bkb		
6/30/2020	3:37 PM	Rebecca Sanchez	9620 O'day Drive	(219) 384-3772	Sewer Backup	lp	has sewer backup in basement. Coming in from backyard. Please call david 219-384-8863 first. Paul is meeting David over there tomorrow morning at 8am	mark				
6/30/2020	3:26 PM		2640 43rd St		Garbage not picked up	kw	texted Eric					
7/1/2020	10:38 AM		9841 Kennedy		Branches Missed	kw	Branches were missed last week, please get them on the regular route tomorrow(Thursday)	Street	y	bkb		
7/1/2020	12:40 PM		SW corner of Kleinman/41st LN		Other: See Notes	kw	Caller said there is a piece of metal sticking up in the easement that is a hazard. He is not sure what it is, tried to pull it out, but could not. He said it is close to the stop sign and he marked it with a stick.Gave to Jeff.	Street	y	bkb		
7/1/2020	2:40 PM		8120 Johnston Street		Branches Missed	kw	Branches were out Monday and not picked up. Resident is concerned it is going to kill his grass :)..Picked up.	Street	y	bkb		
7/2/2020	9:40 AM		3311 Glenwood		Branches Missed	kw	She called Monday to say the branches on this block were never picked up, it wasn't logged. Monday is there normal pickup.Sean got them.	Street	y	bkb		
7/2/2020	9:44 AM		9328 4th St		Branches Missed	kw	Branches have been out for 2 weeks. Today is there pickup, please don't miss them	Street	y	bkb		
7/6/2020	9:44 AM	Mark Plesha	8435 Johnston Street	(219) 433-9154	Locate Lines/B-box	lp	needs bbox locatted. Has plumber coming out the end of the week.found and turned off	WT/SW	y	kr	7/8/20	1pm
7/6/2020	9:47 AM		wirth road		Sink Hole	lp	sink hole on wirth road west of petit park. 5 ft east of the manhole. Locates called	WT/SW				
7/6/2020	9:53 AM	Adam	8425 Liable Road	(708) 790-4593	Water Break	lp	possible water break, water bubbling up in front lawn in middle. Called paul going to take a look at it. Paul said it is on his end.	WT/SW	y	lp	7/6/20	10:24 AM
7/6/2020	10:11 AM	Kim Klisiak	8408 Parrish Ave	219-743-1227	Garbage Can Replacement	kw	can was lost in truck last week. Texted Eric					
7/6/2020	11:22 AM	Dawn	2138 Ramblewood	(219) 314-4003	Tree/Branch Issues	lp	tree struck by lightening was wondering if it was going to be taken down. Been playing phone tag with mark Tree is fine	mark	y	mk		
7/6/2020	11:23 AM	Tim Malloy	9635 Saric Court	(219) 613-0019	Water Break	lp	water in parking area behind building bubbling up.called paul going to take a look at it	WT/SW				
7/6/2020	11:24 AM	Highland Police Dept	Indy Bike trail under pass		Other: See Notes	lp	graffiti on underpass from indy blvd bike trail to wicker park. Called jeff going to take care of it	Street	y	lp	7/6/20	11:25 AM
7/6/2020	2:27 PM		3917 Bayberry Lane		Branches Missed	lp	put branches out yesterday were not picked up on todays route.	Street	y	bkb		
7/6/2020	2:46 PM	Ed	8526 Juniper Trail	(219) 838-5498	Branches Missed	kw	he watched the chipper go by, they did not get his branches. Possible loader stop? Let me know so I can let him know.	Street	y	bkb		
7/7/2020	9:03 AM	Mary Beth Mulligan	2916 38th St	(219) 923-6150	Water Pressure	kw	has had low water pressure since the weekend. Paul is going to check it out.	WT/SW	y	kw	7/7/20	9:09 AM
7/7/2020	9:23 AM		2701 North Drive		Garbage Can Replacement	lp	called two weeks ago about needed can swapped out. Messaged eric to remind him.		y	lp	7/7/20	9:24 AM

7/7/2020	9:24 AM		9404 Ellen Drive		Garbage Can Replacement	lp	r		y	lp	7/7/20	9:25 AM
7/7/2020	10:55 AM		3233 Ridge Road		Branches Missed	lp	had branches out on side street for pick up highland pd told them they had to be moved so now they are right by the alley if someone can get those on wednesdays route. First I don't believe HPD would have a resident move branches off of there parkway and into the alley when we pick up branches from the parkway, this address is on the corner of Ridge and Highland Ave. and the branches are piled behind the garage in the alley and look as if they have been there a long time as they are brown and dead, they can put them in the parkway on the Highland side of there property and will get picked up on Mondays route.	Street	y	bkb		
7/7/2020	11:26 AM	Cavanaugh Insurance	8216 Kennedy	(219) 374-8180	Pot Hole	kw	The alley behind this business has a few large pot holes. They asking for them to be filled.	Street	y	bkb		
7/7/2020	12:44 PM	Sam	3908 Clough Ave	(219) 838-4882	Tree/Branch Issues	lp	had tree taken down in the parkway 3 weeks ago and wants to know when the stump would be ground down.	mark	y	mk		
7/7/2020	1:06 PM		2426 River Drive		Garbage not picked up	lp	had a few garbage bags outside of the can that were not picked up. Messaged eric		y	lp	7/7/20	1:06 PM
7/8/2020	8:21 AM		8042 Wicker Park Drive		Garbage not picked up	lp	garbage was missed and so was his neighbors. Messaged eric		y	lp	7/8/20	8:21 AM
7/8/2020	9:13 AM	Carla	8007 Spruce Street	(219) 718-1218	Other: See Notes	lp	had garbage and recycle bins replaced due to old ones being damaged. Yesterday they emptied both cans and then took them. Messaged eric to let him know both cans were taken again.		y	lp	7/8/20	9:14 AM
7/8/2020	9:19 AM		8139 w. 4th Place		Garbage Can Replacement	lp	needs garbage can swapped out. Messaged eric		y	lp	7/8/20	9:20 AM
7/8/2020	1:00 PM		3528 Franklin Street		Branches Missed	lp	branches were missed on mondays route...they were picked up.	Street	y	bkb		
7/9/2020	7:38 AM		8939 Pettit Drive		Branches Missed	lp	branches were missed on yesterdays route.Picked up	Street	y	bkb		
7/9/2020	9:16 AM		8023 Sycamore Ave		Garbage Can Replacement	lp	garbage can cracked needs replacement. Messaged eric		y	lp	7/9/20	9:17 AM
7/9/2020	9:25 AM		2906 Strong Street		Branches Missed	lp	house faces 4th street branches are on 4th street they were not picked up on Monday resident states they are not hers if we can come pick them up. Picked up	Street	y	bkb		
7/9/2020	10:08 AM		2844 Norman Street		Branches Missed	lp	branches were missed on mondays route.Picked up	Street	y	bkb		
7/9/2020	1:37 PM	William Stinnett	3423 Martha Street	(219) 801-4635	Tree/Branch Issues	LP	resident has tree that thinks it's dead. Wants it looked at. Had someone from a tree service out to trim branches and said tree is dead	mark	y	mk		
7/13/2020	1:43 PM	Komyatte	8812 Liable Road	(219) 677-2830	Tree/Branch Issues	lp	tree in parkway appears to be dead closest to the driveway seems like its going to fall but both of them in the parkway seem dead	mark	y	mk		
7/13/2020	2:13 PM		97th Place and Delaware Place		Sidewalk/Curb Issue	lp	curb over by the apartments the yellow paint from the curbs are gone and people are parking in that area. Wants to know if we can repaint the yellow..Gave to Jeff.	Street	y	bkb		
7/13/2020	2:52 PM	Emily	8810 Osborne Ave	(219) 218-4938	Tree/Branch Issues	lp	has two trees on parkway that appear to be dead. One a huge part of it came down in a storm.	Mark	y	mk		
7/13/2020	2:35 PM	PD	Behind Ultra		Other: See Notes	kw	There is a Republic garbage can and an old small green recycle container. PD is asking if we can pick it up..Gave to Jeff.	Street	y	bkb		
7/13/2020	2:35 PM		8128 Gordon Dr		Garbage Can Replacement	kw	Texted Eric		y	kw	7/13/20	2:59 PM
7/13/2020	3:02 PM		3533 41st Place		Leaves Pickup	lp	resident has bagged leaves that needs to be picked up	Street	y	bkb		
7/14/2020	10:54 AM		2705 North Drive		Garbage Can Replacement	lp	resident has broken handle on garbage can. Needs can swapped out messaged eric.		y	lp	7/14/20	10:55 AM
7/14/2020	2:07 PM		2533 Clough Ave		Other: See Notes	lp	glass shattered in street further down towards end of cul de sac ..Gave to Lou.	Street	y	bkb		
7/15/2020	11:31 AM	Helen Salatas	9529 Manor Dr		Water Pressure	kw	low water pressure. Paul will check it around 1 pm today.	WT/SW	y	kw	7/15/20	11:36 AM
7/15/2020	11:31 AM		9320 O'day Drive		Tree/Branch Issues	kw	Dead branch hanging over sidewalk, hazard. Branch is not dead, looks like it just needs to be trimmed.	Street	y	bkb		
7/15/2020	2:48 PM		2548 Wicker		Garbage Can Replacement	kw	texted Eric		y	kw	7/15/20	12:00 AM
7/15/2020	3:40 PM	James Wyatt	3030 Eder Street	(219) 802-3646	Locate Lines/B-box	lp	bbox needs to be locatted. Having plumber come out to fix inside valve.	WT/SW				
7/16/2020	9:27 AM		8026 Spruce Street		Tree/Branch Issues	lp	had a big branch come down last night is in parkway but is too big and is also in the street, don't know if we can get it sooner than next week	Street	y	bkb		
7/16/2020	11:32 AM		41st Lane and Orchard		Other: See Notes	lp	at 41st and orchard west side, first catch basin North of 41st lane clogged. Wants to know if we can clean it out. Top of it is cleared of debris	WT/SW				
7/16/2020	1:49 PM	Sharon	Essex Point HOA	(219) 924-8925	Tree/Branch Issues	lp	one tree that was worse to than the 4 that were taken down that she wants looked at. And a few other things she needs to talk to you about. If you can give her a call back 219-730-4485 Called On 7-29-20	mark	y	mk	7/29/20201	1:58 PM
7/17/2020	10:44 AM	Cindy	9120 Southmoor Ave	(219) 838-1407	Water On/Off Req.	kw	8am, 7/20 please shut off water, resident is trying to fix outside spigot she will call when it needs to be turned back on. She believes the bbox is in the driveway. Resident called and cancelled.at 3:00 pm Friday (LP)	WT/SW	y	lp	7/17/20	2:58 PM
7/20/2020	8:30 AM		9546 Manor Drive	(219) 922-6069	Restorations	lp	had plow damage over the winter new sod was put down. Resident called saying sod is now dead due to lack of dirt being put down under sod. Wants someone to come out and replace it. If you can talk to her about this.	Street	y	bkb		
7/20/2020	8:31 AM	Marshall	9524 Farmer Drive	(219) 201-3197	Other: See Notes	lp	wants the town to come check our side of the sewers to see if there is anything plugging them up.Aaron jetted our sewers they are fine	WT/SW	y	ak	7/20/20	1pm
7/20/2020	9:35 AM		9525 Saric Drive??		Dead Tree/Status?	lp	house north of 9527 saric drive has dead trees in parkway dropping big branches into their yard and they are elderly. Take a look at them to see if they are dead Trees are dead per inventory remove	Mark	y	mk	7/30/20	6:47 AM
7/20/2020	9:51 AM		3967 Juniper Trail		Branches Missed	lp	drove by branches and did not get picked up. Resident just wants to make sure they get picked up today.	Street	y	bkb		
7/20/2020	10:17 AM		2643 39th Place		Garbage Can Replacement	lp	garbage can has a hole in it needs to be replaced messaged eric		y	lp	7/20/20	10:18 AM
7/20/2020	10:25 AM	Linda	2634 41st Place	(219) 730-6808	Other: See Notes	lp	pipe sticking up on sidewalk. Gave it to tim b - box repaired needs concrete gave to Brian	WT/SW	y	tg	7/20/20	11am
7/20/2020	10:30 AM	Jennifer	3112 98th Street East	(219) 433-4940	Dead Tree/Status?	lp	tree in parkway seems to be dead dropping big branches.	Mark				
7/20/2020	12:00 PM	Harwood	9540 O'Day Drive	(219) 644-6379	Restorations	kw	Parkway was backfilled a couple of weeks ago due to a Water Main Break over the winter. After all of the rain this weekend it has sunk again, needs filled again and seeded	WT/SW				
7/20/2020	3:59 PM	Camille/Price Point Builders	2731 41st St	(219) 742-8873	Other: See Notes	kw	Trying to see if there are existing taps for water/storm/sewer. Please call her	WT/SW				
7/21/2020	9:00 AM		8732 Woodward Ave		Other: See Notes	kw	Has 3 yard waste bags that the garbage men did not pickup. Can we grab them, please..Jeff will get them.	Street	y	bkb		
7/21/2020	10:30 AM		3301 Strong Street		Leaves Pickup	lp	has a garbage can full of leaves and grass that garbage men didn't pick up it is in a can wants to know if we can come empty it does not have bags to put it in. Resident has no way of bringing can here ...Gave to Jeff.	Street	y	bkb		
7/21/2020	11:57 AM		3300 Grand Blvd		Sewer Backup	kw	Sent Aaron to check it out.	WT/SW	y	kw	7/21/20	11:58 AM
7/21/2020	1:59 PM		Wirth and Petitt		Sink Hole	kw	repaired and filled sink hole last week, it has settled and needs more gravel	WT/SW	y	gh	7/21/20	1pm
7/22/2020	8:03 AM	Bradford	9035 O'day Drive	(219) 218-7630	Sink Hole	lp	repaired a sink hole last fall by drain and it is now starting to sink again.	WT/SW				
7/22/2020	8:12 AM		3142 Wirth Road		Branches Missed	lp	said her neighbors were picked up but not hers chased truck a block away to try and get their attention. Can you make sure they go back and get her branches ...no branches here.	Street	y	bkb		
7/22/2020	9:09 AM	Wally Pearson	3109 100th Place	(219) 384-3665	Sidewalk/Curb Issue	lp	stopped in to get information on sidewalk replacement program and wants to know if you can come take a look at it and possibly talk to him at his residence.	street	y	bkb		
7/22/2020	10:32 AM		5th and Wirth Road		Pot Hole	lp	huge pot hole had gravel in it but gravel is low and hole is deep. Need to be refilled. On the curve of wirth and 5th ..was told Gavin was filling this.	Street	y	bkb		
7/22/2020	1:08 PM		8925 Orchard Drive		Branches Missed	lp	has had branches out for awhile and have not been picked up. If you can make sure they get them today or tomorrow..Gave to Grant	Street	y	bkb		

7/22/2020	12:00 AM		3627 42nd Drive		Branches Missed	lp	branches were missed..Gave to Grant.	Street	y	bkb		
7/23/2020	9:33 AM	Strickland	2019 Main Street	(219) 718-4175	Other: See Notes	lp	resident said john bach always sent someone out here to take care of the weeds in the ditch. Said someone needs to take care of it because it is really bad .Will send someone to spray and weed wack,usually have to do once a year.	Street	y	bkb		
7/23/2020	1:46 PM		3114 Wirth Road		Sink Hole	lp	has a sink hole developed in parkway	WT/SW				
7/24/2020	10:14 AM	Beth Hobbs	Kennedy and 100th Street	(219) 924-7135	Other: See Notes	lp	wants a light for the turn lane turning left into lake side said only one car get get through light with all the traffic. Cell number as well 219-682-5854 On traffic safety agenda for august 4th	Mark	y	mk	7/30/20	3:31 PM
7/24/2020	1:21 PM	Mark	8435 Johnston Street	(219) 433-9154	Water On/Off Req.	lp	resident having work done on house had water turned off wants to know if someone can meet him there Tuesday 7/28/2020 at 7:30 am to turn back on water.	WT/SW				
7/24/2020	2:21 PM	Brian	2826 Ross Street	(708) 738-4147	Locate Lines/B-box	lp	needs bbox locatted to fix leaky valve.	WT/SW				
7/27/2020	8:58 AM	Susan Johnson	8951 Cottage Grove Ave	(219) 838-8015	Sidewalk/Curb Issue		needs 1 square of sidewalk replaced. Please contact her, she will be home all day	Street	y	bkb		
7/27/2020	11:01 AM		9445 Parkway Drive		Branches Missed	lp	branches were missed Friday. They Gone!	Street	y	bkb		
7/27/2020	12:27 PM		2018 38th Place		Tree/Branch Issues	lp	resident stated vacant house on the corner of 38th place and wildwood on the north side there is a tree or bush of some sort of tree is almost completely blocking the stop sign. Gave to Jeff to remove the bush.	Street	y	bkb		
7/27/2020	1:01 PM	Wally Hayes	9040 Woodward Ave	(219) 838-1202	Locate Lines/B-box	lp	needs bbox located. Has a plumber coming tomorrow. Called paul going to go over there	WT/SW	y	lp	7/27/20	1:08 PM
7/27/2020	2:18 PM	Mike Kokot		(219) 718-4920	Other: See Notes	lp	8900-9000 wildwood and 37th place. Wants road to be repaved this year or next year. On schedule for 2021	mark	y	mk	7/29/20	2:08 PM
7/27/2020	3:19 PM		2024 Ridge Road		Branches Missed	lp	branches are on parkway branches were missed last two weeks..Picked up.	Street	y	bkb		
7/28/2020	11:38 AM		Churchill lane and st james place		Street Light Out	lp	decorative light out it comes on but then flickers on and off then completely goes out. Gave to Jeff.	Street	y	bkb		
7/29/2020	7:55 AM	Dana Compo	8037 Duluth Street	(219) 427-2151	Sink Hole	lp	resident has called numerous times in regards to the sewer in front of her house and that the concrete is cracked really bad can someone take a look at it. I spoke with resident on july 23 2020 and told her we would pull the drive apron and reseal the m/h , do not know why she is calling again but will find out.	WT/SW				
7/29/2020	9:17 AM	Barrington Parker	9410 Erie Street	(219) 512-3219	Water On/Off Req.	lp	guy needs water shut off asap. Needs to fix a leaking water spicket. Paul going to do it	WT/SW	y	lp	7/29/20	9:27 AM
7/29/2020	12:42 PM		2912 38th Street		Branches Missed	lp	branches were missed yesterday..They looked pretty freshly cut to me, will try to get them on Friday, if not then on Tuesdays route.	Street	y	bkb		
7/30/2020	11:10 AM		8428 Parrish Ct		Branches Missed	lp	branches were missed last two weeks..Loader stop.	Street	y	bkb		
7/30/2020	11:23 AM	Dana Compo	8037 Duluth Street	(219) 427-2151	Sink Hole	lp	resident has called numerous times in regards to the sewer in front of her house and that the concrete is cracked really bad can someone take a look at it. Said she has left multiple messages for tim and has heard nothing back in the past month. Arron checked Manhole is finr no leaks drive cracked from tree roots	mark	y	AK	8/3/20	2:00pm
7/30/2020	1:21 PM	Lynn Rhodes	9320 Waymond	(219) 793-3533	Dead Tree/Status?	lp	two trees in the parkways that look really bad seem to be dead. Not dead needs pruning	mark	y	mk	8/4/20	9:00am
7/30/2020	3:12 PM		10019 4th Place		Locate Lines/B-box	lp	needs bbox locatted.	WT/SW				
7/31/2020	8:32 AM	William Stinnett	3423 Martha Street	(219) 801-4635	Dead Tree/Status?	lp	tree in parkway seems to be dead dropping big branches. Tree removed by SD	mark	y	mk		
7/31/2020	10:54 AM	Katie toso	3905 Clough Ave	(708) 935-0163	Dead Tree/Status?	lp	tree in parkway west side of parkway seems to be dead.tree removed from SD	mark	y	mk		
7/31/2020	11:56 AM		2606 41st St		Garbage Can Replacement	kw	garbage can damaged, needs it replaced. Sent text to Eric		y	kw	7/31/20	11:57 AM
7/31/2020	12:39 PM	John	7940 Spruce Street	(708) 212-0108	Dead Tree/Status?	lp	tree in parkway seems really bad. Family friend that cuts grass came in to tell us. Owner is in nursing home. Not dead needs pruning.	mark	y	mk	8/4/20	9:30am
7/31/2020	2:27 PM		9211 Prairie Ave		Branches Missed	lp	branches were missed for fridays route..Loader stop.	Street	y	bkb		
8/3/2020	8:20 AM		3128 Duluth Street		Branches Missed	lp	said truck drove by and didn't get her branches ..They were picked up.	Street	y	bkb		
8/3/2020	9:01 AM	Mari		(312) 404-4335	Other: See Notes	lp	said john bach gave her parents sand bags because they flood, wanted to know if she can get 10 sand bags.	Street				
8/3/2020	2:31 PM	Burton	9028 O'Day Drive	(219) 838-6689	Dead Tree/Status?	lp	resident has dead tree on parkway. Street Dept to remove	mark	y	mk		
8/4/2020	12:48 PM		10140 White Oak Lane		Garbage Can Replacement	lp	can is cracked messaged eric		y	lp	8/4/20	12:48 PM
8/5/2020	11:54 AM		2106 Azalea		Other: See Notes	kw	Bbox is sticking up from the sidewalk approx. 4" and is a tripping hazard Kyle and Trey cut and lowered	WT/SW	y	ak	8/5/20	12:39 PM
8/5/2020	3:23 PM	Wilson	3114 Wirth Road	(219) 746-7312	Sink Hole	lp	has a sink hole in the parkway next to driveway called back on july 27th and no one has been out yet to look at it. Getting bigger over time. Can someone take a look at it. Sent Kyle to check it.	WT/SW	y	bkb		
8/6/2020	8:57 AM		3653 38th Street		Branches Missed	lp	branches were missed has a wedding this weekend in her backyard needs them gone asap. ..Picked up	Street	y	bkb		
8/6/2020	10:09 AM	Jeff (tiger plumbing)	2841 Highway Ave	(219) 838-1151	Locate Lines/B-box	lp	needs bbox locatted.	WT/SW				
8/6/2020	1:27 PM		2721 41st Street		Branches Missed	lp	branches were missed last week. Picked up.	Street	y	bkb		
8/7/2020	3:13 PM		9933 Delaware Place		Branches Missed	lp	Branches were missed on Thursday..Picked up.	Street	y	bkb		
8/7/2020	3:30 PM		2831 Eder Street		Other: See Notes	lp	branches were dumped in the alley behind her garage. Is on crutches and cannot move themup front and has no one to help her. If we can get them for her.Picked up.	Street	y	bkb		
8/7/2020	3:29 PM	Ruth Finke	3545 Condit	(219) 718-6957	Water On/Off Req.	kw	Water leak in the middle of the yard Geary is going to shut it off	WT/SW	y	kw	8/7/20	3:39 PM
8/10/2020	10:12 AM		9610 Erie St	(708) 259-6607	Other: See Notes	lp	said alley needs to be grated really bad. Has called in a few times in regards to this.This is not an alley.It leads to a duplexes driveway, it has no garages that it services.We have never even plowed it or stoned before, its private and only used by this resident to gain acess to their driveway from the easement since there is no garage to this address.	Street	y	bkb		
8/10/2020	3:11 PM		8818 Cottage Grove Ave		Other: See Notes	lp	has yard bags with leaves if someone can get those.	Street				
8/11/2020	10:43 AM		Garfield /Franklin		Other: See Notes	lp	grass alley has bushes yhat are really over grown cant walk through alley, wants to know if we can see whos responsible in trimming them. I'massuming this is the easement between 5th and Delaware, its not an alley, and the residents are responsible for maintaining trees and bushes in those areas, but there are also power lines and tv/cable lines in that easement as well.We don't trim those areas anyways and the other utiltiy companies would have to if need be.	Street	y	bkb		
8/11/2020	12:30 PM	Walter Krieger	10042 Prairie Circle	(312) 504-7292	Other: See Notes	lp	guy said his sump pump runs constantly thinks there may be a leak somewhere in the main if someone can possibly go look at it. Gave to Kyle & Trey.	WT/SW	y	bkb		
8/11/2020	12:49 PM		2047 Azalea		Tree/Branch Issues	kw	Neighbor called and said this resident is on vacation. A large limb fell from the parkway tree and is in the street..its fine for now, will get it tomorrow.	Street	y	bkb		
8/11/2020	3:34 PM	CVS	3405 Ridge Road	(219) 972-7131	Other: See Notes	lp	side walk facing grace street towards back of building said there is a pipe sticking up out of sidewalk.Gave to Kyle & Trey,	WT/SW	y	bkb		
8/11/2020	3:35 PM		3106 Condit		Tree/Branch Issues	kw	Has a pile of branches that came down in the storm last night.Picked up.	Street	y	bkb		
8/11/2020	3:52 PM		2046 44th St		Tree/Branch Issues	kw	branches out from last nights storm..Fridays route.	Street	y	bkb		
8/12/2020	7:58 AM	James	2124 Martha Street	(219) 746-9031	Tree/Branch Issues	lp	big branch hanging over street ..already been removed.	Street	y	bkb		
8/12/2020	9:02 AM		3525 Franklin Street		Tree/Branch Issues	lp	resident has two big branches out front from storm. Monday is normal route but was wondering if they had time if somone can pick them up..Picked up.	Street	y	bkb		
8/12/2020	9:12 AM		8434 delaware Street		Tree/Branch Issues	lp	has big branches out front from storm usually mondays route..Picked up.	Street	y	bkb		

8/12/2020	1:31 PM	Dan Smith	8056 Glenwood Street	(219) 951-9890	Other: See Notes	lp	has had a constant spot that's wet and it is in the backyard might be broken water pipe if someone can take a look at it..Gave to Kyle to	WT/SW	y	bkb		
8/13/2020	9:10 AM		8001 Kennedy Ave		Tree/Branch Issues	kw	missed branches, SW corner of front office.Sounds like a job for the front office staff...Thanks much for the help.	Street	y	bkb		
8/13/2020	2:15 PM	Kate (four seasons)	3131 100th Place	(708) 581-3017	Other: See Notes	lp	sewer inspection on a storm sewer repair needed tomorrow Friday 8/14/2020 @ 1:30pm. Talked to kyle said he will take car of it	WT/SW	y	lp	8/13/20	2:16 PM
8/17/2020	9:24 AM	Grace Steffens	8525 Henry St	838-4602	Pot Hole	kw	Wants to know if someone will please look at the alley behind her home. She said it is in bad shape and making it hard to get in her garage.	Street				
8/17/2020	9:27 AM		2639 Grand Blvd		Tree/Branch Issues	lp	has branches in her alley, told her she had to move them up front but she insisted that since she lives on the corner they can get them without going into the alley. And that there is too much to move up front. This house is not on the corner, it's the second house east of Gordon Dr. and we would have to go into the alley to get the branches so they need to be out front for us to pick them up.	Street	y	bkb		
8/17/2020	9:28 AM	American Legion	2703 Jewett Ave		Tree/Branch Issues	lp	resident called in complaining that the branches for the trees by the legion are hanging over onto the bridge and coming over the bridge you cannot see the traffic lights. Drove east and west bound along Ridge Rd. and had no problem seeing the traffic signals.	Street	y	bkb		
8/17/2020	10:43 AM		9214 Idlewild Drive		Branches Missed	lp	branches were missed on fridays route	Street	y	bkb		
8/17/2020	11:06 AM	Carol	3339 Geroge Street	(219) 771-0346	Sink Hole	lp	corner of george and farmer in the parkway there is a sink hole, they called back in beg of july to have it looked at no one has been out there to look at it yet because its still there. Kyle checked this out and it is on a to do list 8/18/20Repair is scheduled for monday 8/24/20	WT/SW	y	tg	8/13/20	
8/17/2020	12:01 PM	Darlene Olson	3519 42nd Pl	(219) 924-3035	Restorations	kw	Town removed a tree a couple years ago and the restorations were never done.Taken care of.	Street	y	bkb		
8/17/2020	12:25 PM		8728 Carolina		Branches Missed	kw	Branches have been out since the storm last week :). Picked up.	Street	y	bkb		
8/17/2020	2:02 PM		2615 39th Place	(219) 306-6889	Water On/Off Req.	lp	is having bath tub worked on tomorrow around 12pm was wondering if we can shut off water between 11/11:30am.	WT/SW	y	matt	8/18/20	
8/18/2020	2:40 PM		8818 Cottage Grove Ave		Leaves Pickup	lp	resident has a lawn bag in front of house with leaves in it. Has called 3 times and has not been picked up if someone can please get that tomorrow. Jeff will get them today.	Street	y	bkb		
8/19/2020	12:30 PM		2651 Wicker		Recycle not picked up	kw	messaged Eric		y	kw		
8/19/2020	1:47 PM		2942 45th Street	(219) 805-1180	Sewer Backup	lp	has bathtub and toilets backing back up into the bathroom. Aaron checked our sewer is fine advised resident	WT/SW	y	ak	8/19/20	
8/20/2020	10:21 AM	Burton, Keith	9028 O'Day Drive	(219) 838-6689	Dead Tree/Status?	lp	resident believes to have a dead tree in the parkway. Street dept to remove	mark	y	mk	9/17/20	
8/20/2020	11:24 AM	Salvador	3150 Strong Street	(219) 923-5337	Dead Tree/Status?	lp	resident has a tree on the parrish side of house. Seems to be dead Trees are not dead	mark	y	mk	9/17/20	
8/20/2020	12:35 PM		9841 Kennedy		Tree/Branch Issues	lp	has had branches out since last week neighbors got picked up last week but his didn't ..Todays area and the days not over yet.	Street	y	bkb		
8/20/2020	2:56 PM		9512 Erie Street		Tree/Branch Issues	lp	branches missed Picked up	Street	y	bkb		
8/20/2020	12:00 AM		9321 Orchard Drive		Tree/Branch Issues	lp	branches missed ..Picked up	Street	y	bkb		
8/21/2020	10:30 AM		2835 43rd Street		Tree/Branch Issues	lp	branches missed ..Thursday's route.	Street	y	bkb		
8/21/2020	11:27 AM		3235 Saric Ct		Other: See Notes	lp	water shut off in back is sticking out really high if we can pound it back down. B-box was tapped down	WT/SW	y	tw		
8/24/2020	1:36 PM	Moore	9349 Ellen	(219) 924-7402	Water Pressure	lp	resident is experiencing low water pressure left message to call back to schedule someone to come out	wt/SW	y	pb		
8/24/2020	3:09 PM	John	8740 Indianapolis blvd	(219) 838-8323	Tree/Branch Issues	lp	tree on the north side of the building seems to be cracked and might fall over doesn't know if its on their property or ours if someone can take a look at it and let him know. Afraid a storm will knock it over. Talked to John and informed him that it was their tree since it is on the back side of the sidewalk and on their property.	Street	y	bkb		
8/25/2020	8:14 AM		8211 Grace Street		Sink Hole	lp	has a sink hole forming in front of drive way in street by man hole.has been repaired	WT/SW	y	tw/kr		
8/25/2020	9:16 AM		3516 81st Street		Branches Missed	lp	has had branches out for 3 weeks now. Jeff and Dennis getting them today.	Street	y	bkb		
8/26/2020	8:32 AM		2634 40th Place		Dead Animal	lp	dead cat in the street.Notified Dennis.	Street	y	bkb		
8/26/2020	11:02 AM		8529 1st Street		Branches Missed	lp	had branches missed yesterday..didnt see any branches here.	Street	y	bkb		
8/26/2020	1:48 PM	Carol	8950 O'Day Drive	(219) 838-1882	Dead Tree/Status?	lp	tree is dropping big limbs and seems to be splitting Not dead needs prunig	Mark	y	mk	9/14/20	11:30am
8/26/2020	3:33 PM		2508 Ridge Road		Tree/Branch Issues	lp	branch fell into road..branch in parkway of this address,picked up.	Street	y	bkb		
8/27/2020	10:38 AM	OLG	3005 Condit Street	(219) 838-0395	Other: See Notes	lp	company doing the new ramps damaged two sprinkler heads when doing so the need them repaired.Given to Walsh & Kelly for repair	mark	y	mk	9/14/20	9:00am
8/27/2020	11:07 AM	Amy	9715-9717 5th Street	(219) 313-6040	Other: See Notes	lp	called in regards to garbage dumpster over flowing needs it swapped out but company cant get to it because of the water main project. Can someone let her known when project will be done and it can be scheduled. Resdient called back saying the company is going to move the gate blocking it off to get to it since no one called back. spoke with Amy all is ok	WT/SW	y	tg		
8/27/2020	12:09 PM	Karen Stamos	2711 38th Street	(219) 972-1118	Restorations	kw	restorations were done but big ruts that were made with the bobcat were missed. She wants you to contact her so she can meet with you and show you what she is talking about will stop there mon aug 31 @ 8am, looked at this there was no big ruts a couple of small depressions that will be filled	WT/SW				
8/27/2020	12:32 PM		3102 99th Pl		Garbage Can Replacement	kw	called a few weeks ago to have his damaged garbage can swapped out, still hasn't happened. Texted Eric		y	kw	8/27/20	12:33 PM
8/28/2020	8:05 AM		3740 Alti Ct		Other: See Notes	lp	loader stop resident has stump out front for pickup.They will get it today.	Street	y	bkb		
8/28/2020	9:20 AM		2124 Bluebird Lane		Tree/Branch Issues	lp	has had a big branch on the parkway since the storm a few weeks ago, said she has seen the truck drive by and not stop and get it, ..picked up.	Street	y	bkb		
8/28/2020	10:38 AM		8529 1st Street		Tree/Branch Issues	lp	said he has branches out, that they were not picked up. Told him we didn't see any and he said they are on the grass . Grant and Dylan will go by again and look for branches.	Street	y	bkb		
8/31/2020	8:45 AM		9700 Indianapolis Blvd		Street Light Out	lp	street light at the corner of 45th and indy light is out. West side in front of garber. Lady said it is so dark at night it is hard to see the lanes. Sent to Midwestern.	Street	y	bkb		
8/31/2020	9:08 AM		2019 Main Street		Other: See Notes	lp	said the weeds are really bad in the ditch again and that the town needs to come out and trim it .Mowing crew took care of it.	Street	y	bkb		
9/1/2020	7:52 AM	Felicia Sutton	9046 Kleinman Road	(219) 951-8831	Other: See Notes	lp	resident has a puddle of water in front yard wants to know if there is something leaking in her front yard since we havent gotten any rain lately was a service leak ,has been repaired	WT/SW	y	tg		
9/1/2020	9:06 AM		corner of 5th and lakeside		Other: See Notes	lp	treet hanging over stop sign ..Gave to Jeff.	Street	y	bkb		
9/1/2020	9:20 AM		3512 Wicker Ave		Branches Missed	lp	has a big branch out front has been missed for 2 weeks now ..Gone!	Street	y	bkb		
9/1/2020	10:51 AM		45th and Kennedy Ave		Traffic Light Out	lp	red light out at east bound 45th at the intersection of kennedy and 45th street.Gave to Jeff.	Street	y	bkb		
9/1/2020	2:45 PM		Orchard and 41st Street		Other: See Notes	lp	clogged catch basin. On the west side of orchard at 41st lane.	WT/SW	y	ak		
9/2/2020	8:33 AM	Gail	9523 Saric Drive	(219) 712-9405	Dead Tree/Status?	lp	has a few trees in the parkway that thinks they are dead. Can someone take a look at them. On list for removal	Mark	y	mk	9/16/20	10:00am
9/2/2020	12:58 PM	Roy Nagel	10019 Express Drive	(219) 805-0269	Water On/Off Req.	lp	has a leak and needs to repair. Needs water off asap. Will call when the work is done tomorrow. Called 9/3/20 - Paul is turning it back on	WT/SW	y	kw	9/3/20	11:36 AM
9/3/2020	12:00 AM	Jim	3123 Lois Place	(219) 802-0751	Dead Tree/Status?	lp	has a tree in parkway appears to be dead. Street dept removed	Mark	y	mk	9/18/20	

9/3/2020	2:21 PM		8715 Parkway Dr	(219) 218-9066	Tree/Branch Issues	kw	branch broke off the tree and is still hanging 85 yo grandma can't pull it down and thinks it is a hazard. Please check..Not our tree and the branch broke toward her and the neighbors house,I have a picture of it on my phone. Called the resident and gave her Russel's # - kw	Street	y	bkb		
9/8/2020	8:17 AM		9407 Forrest Dr		Tree/Branch Issues	kw	Branch broke off in the tree and is hanging, resident can't reach it and feels it is a danger. Please check.Jeff got it down.	Street	y	bkb		
9/8/2020	9:38 AM	Lisa	3419 43rd St	(708) 743-3954	Drainage Issues	kw	Has backup in the basement, sending Aaron to check it. Not our issue	WT/SW	y	ak	9/8/20	11:18 AM
9/8/2020	10:08 AM		10120 Kennedy Ave		Branches Missed	lp	has had branches out for 3 weeks and have not been picked up yet..Will get them this week.	Street	y	bkb		
9/8/2020	11:02 AM	Diane Fultz	3428 Laporte Street	(219) 775-3361	Dead Tree/Status?	lp	has a tree in the parkway that appears to be dead and another that looks like it is starting to uproot if they can be looked at ..Not dead storm damage needs pruning	Mark	y	mk	9/14/20	10:00am
9/9/2020	10:30 AM		3318 Wirth Rd		Tree/Branch Issues		Across the street there is a tree in the parkway that has a limb hanging low over the street that is in the way of traffic..been already removed.	Street	y	bkb		
9/9/2020	11:20 AM		2725 Wicker Ave		Pot Hole	lp	big pot hole in road been there for 5 months wants to know when it will be filled ...This is a sink hole on the sewer, not sure if the repair has been made...check with Tim.	Street	y	bkb		
9/9/2020	12:01 PM		8812 Carolina Ave		Garbage Can Replacement	kw	garbage can damaged, needs replaced. Sent text to Eric		y	kw	9/9/20	12:01 PM
9/9/2020	2:22 PM		3024 101st Street		Garbage Can Replacement	lp	needs garbage and recycle bins swapped out messaged eric		y	lp	9/9/20	2:23 PM
9/9/2020	2:43 PM		3722 Wirth Road		Branches Missed	lp	branches were missed today. They are runnimg behind due to the fact that Monday was a Holiday, but they will be picked up this week.	street	y	bkb		
9/10/2020	`3:15 PM		9411 Ellen		Branches Missed	lp	branches were missed today. Picked up.	Street	y	bkb		
9/10/2020	3:16 PM	Sharon Warner	9313 Forrest Drive	(219) 781-5307	Dead Tree/Status?	lp	has a tree in the parkway. Seems dead lots of ants thinks it is hollow on the inside, if someone can take a look at it.Tree is not dead has a good rating	mark	y	mk	9/14/20	10:30am
9/11/2020	8:52 AM	Theresa	9028 Cottage Grove Ave	(219) 742-4068	Sink Hole	lp	resident has what seems to be a sink hole in front yard. Sinkhole is up in yard 15` from house they have nothing tied minto the storm sewer in that location	WT/SW	y	tg	9/17/20	
9/11/2020	9:00 AM	Cris	10019 & 10033 4th Street	(219) 801-2043	Other: See Notes	lp	having issues with the pavement in front of their driveways if you can take a look at it and advise her on what can or can't be done.Talked to resident and scheduled the work for next week weather permitting.	Street	y	bkb		
9/14/2020	9:28 AM		2641 41st Street		Branches Missed	lp	had branches out said only some were picked up. Don't know if the others were for the loader or not. Loader Stop.	Street	y	bkb		
9/14/2020	11:43 AM		9406 Wildwood		Branches Missed	lp	had branches out for fridays pick up. They were missed.Picked up.	Street	y	bkb		
9/14/2020	1:35 PM		2626 41st Street		Branches Missed	lp	branches were missed last week. Jeff and Dennis got them.	Street	y	bkb		
9/16/2020	7:36 AM		3317 Lincoln Street		Recycle not picked up	lp	that block of lincoln street recycling was missed messaged eric.		y	lp	9/16/20	7:37 AM
9/16/2020	12:38 PM		2832 41st Street		Other: See Notes	lp	had tree on parkway taken down and stump is there still, been over a month just wanted to remind us it was there	mark				
9/16/2020	12:49 PM		8928 Schneider Ave		Garbage not picked up	kw	neighbor also. Sent text to Eric		y	kw	9/16/20	12:50 PM
9/21/2020	10:36 AM		5th and Strong Street		Dead Animal	lp	dead raccoon on 5th and strong street.Got it.	Street	y	bkb		
9/21/2020	11:37 AM	Ryan Miller	3207 Eder	(219) 718-7247	Locate Lines/B-box	kw	needs bbox located for plumber to shutoff to fix water line/valve in home. Call first, he has dogs. Gave to Paul	WT/SW				
9/21/2020	2:21 PM		2305 Ridgewood		Tree/Branch Issues	lp	neighbor came in and said there are tree branches in the street and you cant see past them to make the turn. If someone can take a look at it. Todays route,but will take a look.	Street	y	bkb		
9/21/2020	3:40 PM	Veronica	2944 Grand Blvd	(219) 902-9672	Other: See Notes	lp	resident had a plumber out for possible sewer issues. Plumber told her that the issue is on our end if we can send someone out to take a look at it and talk to her. Aaron checked our sewer is fine talked to resident	WT/SW	y	ak		
9/22/2020	7:32 AM		3433 Ross Place		Branches Missed	lp	has had branches out for 3 weeks and they have not been picked up.Picked up.	Street	y	bkb		
9/22/2020	9:39 AM		2646 Wicker ave		Tree/Branch Issues	lp	had branches in alley are moving them up front now. Cleaning up yard for a family member that just passed have people coming in town can someone swing by there by today to get them..Todays route.	Street	y	bkb		
9/22/2020	10:10 AM	Graegin	2728 Clough Ave		Other: See Notes	lp	had branches grinded up and is not happy with the mess left behind and wants us to come clean it up.	Street	y	bkb		
9/22/2020	1:07 PM		8542 Henry Street		Dead Animal	lp	dead animal on henry street north side almost directly behind the post office in the street..Gave to Kevin	Street	y	bkb		
9/23/2020	8:38 AM		9106 Erie Street		Branches Missed	lp	has had branches out for a month and have yet to be picked up. Mark said he was there last week and they were out and they are still there this week.Will get them on tomorrows route.	Street	y	bkb		
9/25/2020	8:01 AM	Anthony Zurlis	3130 Maple Drive	(219) 972-0509	Tree/Branch Issues	lp	has a tree branch 25 feet up in his parkway tree that is hanging. Said if it comes down it could kill someone. Told him maintaining the tree is home owners responsibility he refused to do it and said we have gone out there before in the past.	Street	y	tg		
9/25/2020	8:15 AM		North Drive/ Parrish		Dead Animal	lp	dead animal at north drive and parrish	Street	y	tg		
9/25/2020	8:30 AM		Indy on Bridge by wicker park		Dead Animal	lp	dead raccoon on bridge heading towards 81st nb	Street	y	lp		
9/25/2020	9:43 AM		3730 43RD Street		Branches Missed	lp	branches were missed on Wednesday pick up	Street	y	tg		
9/25/2020	11:29 AM	Tom Kasperzak	3350 Maple Dr	(219) 838-5023			2 maple trees in the parkway, he thinks they are dead or dying please check and advise. trees not dead need pruning	mark	y	mk	9/30/20	
9/25/2020	1:08 PM		9533 Kennedy Ave		Dead Animal	lp	dead animal on kennedy ave.	Street	y	lp		
9/28/2020	11:39 AM	Frank Sturges	2013 37th Pl	(219) 972-0792	Other: See Notes	kw		Street	y	tg		
9/29/2020	10:51 AM		2731 Norman		Pot Hole	lp	has really bad pot holes in alley that people are driving in his grass to avoid them.Sean hot patched them	Street	y	tg		
9/29/2020	12:46 PM	Philip Meyer	2715 40th Street	(219) 793-2715	Sink Hole	lp	has a sink hole developing on the easment side of their fence between his house and the house behind him and the sanitary sewer runs back there.televised our sanitary sewer it is fine advised resident	WT/SW	y	ak/dc		
9/29/2020	3:02 PM	Tim Doe	2904 W. 4th Place	(219) 616-6651	Dead Tree/Status?	lp	tree on parkway next to driveway appears to be dead 19" tree next to driveway dead. Russel to remove	mark	y	mk	9/30/20	
9/30/2020	3:34 PM		3138 Condit Street		Pot Hole	lp	pot holes in alleyway	Street	y	bkb		
10/1/2020	12:06 PM		41st and Farmer Dr		Sink Hole		on the Subarban Churchside, about a foot out from the curb there are 2 holes approx. 5-6" wide and 4 or 5" deep. Please fix jeff will fill	WT/SW	y	tg		
10/2/2020	9:30 AM		Jewett Ave by Library		Tree/Branch Issues	lp	across the street from the library there is a branch hanging over the sidewalk looks like might fall if someone can look might be parks dept if its on the trail not 100% on that one. Jeff will check it	Street	y	bkb		
10/2/2020	12:32 PM		9726 5th Street		Branches Missed	lp	branches were missed yesterday Grant will get them today	Street	y	ga		
10/2/2020	2:36 PM	Caroline	8700 Block of Parrish	(219) 316-2072	Other: See Notes	lp	D18 light pole was hit on the corner of parrish and ridge in an accident and the residents want to know if that pole will go back up. If someone can just let them know.	Street				
10/5/2020	9:34 AM	Daniel Liston	3101 Farmer drive	(219) 433-6997	Dead Tree/Status?	lp	has a tree in the parkway that has gotten really bad over the years. Think it's dead if it can be looked at.	mark				
10/5/2020	10:54 AM	Moe	9301 Indianapolis Blvd	(708) 856-2296	Sink Hole	lp	thinks he has a sink hole forming behind his building , close to a sewer this is a hsmall hole in the culvert on the spring ditch I will notify the county	WT/SW				
10/5/2020	1:07 PM	Tim	8809 Prairie Ave	(773) 630-3880	Pot Hole	lp	pothole is actually on kenilworth close to his driveway, seems to be getting worse with the trucks driving over it.	Street				
10/5/2020	2:00 PM		3643 43rd street		Branches Missed	lp	branches were missed last week.	Street	y	bkb		
10/6/2020	9:50 AM	Jeff	8345 5th Street	(219) 218-3665	Locate Lines/B-box	lp	needs water shut off locatted. Gave to paul will locate today	WT/SW	y	lp	10/6/20	9:55 AM

10/6/2020	10:16 AM	Cynthia	2148 Cypress	(219) 513-6230	Other: See Notes	lp	needs sprinkler meter pulled nexte week between 10/12-10/14 for irrigation company to come 12/15. gave note to tim.	WT/SW				
10/6/2020	1:49 PM		3032 99th Place W.		Branches Missed	lp	branches were missed last week.	Street	y	bkb		
10/6/2020	3:34 PM		8738 Parkway Drive		Branches Missed	lp	branches were missed today	Street	y	bkb		
10/7/2020	9:18 AM		Grand Blvd and Parrish		Other: See Notes	kw	There is a large hole in the parkway at this corner that needs dirt and seed	Street	y	bkb		
10/8/2020	9:06 AM	Connie Foundos	2918 Laporte Street	(219) 741-0309	Locate Lines/B-box	lp	needs bbox locatted and for water to be shut off tuesday10/13/20 at 8:30am. Paul is going over there today to locate bbox and make sure it is functioning correctly.	WT/SW	y	tg		
10/8/2020	2:01 PM	Donora	10013 4th Place	(219) 688-0592	Dead Tree/Status?	lp	trees are lifting up sidewalks. Said someone was over but didn't talk to her, if somone can call her and let her know what is going on. Talked to man at house told his the walk is their responsibility	mark	y	mk	10/2/20	
10/9/2020	12:55 PM		2725 Wicker Ave		Pot Hole	lp	has had a pot hole in the road since may. Has had cones around them but was wondering when it will be fixed. Said she called 2 weeks ago and nothing has been done. Spoke with resident and advised her it was not forgotten that our engineer is working on the best way to do the repair	WT/SW	y	tg		
10/12/2020	7:51 AM		main and 41		Pot Hole	lp	someone called in saying there is a huge pot hole on 41 might be a sewer cover missing not sure. Didn't see anything in that area.	Street	y	bkb		
10/12/2020	11:45 AM		2700 Block Wicker Ave		Sink Hole	kw	Sink hole since May. Been coned off they want to know when it will be taken care of. I spoke with resident all is good	WT/SW	y	tg		
10/12/2020	2:20 PM	Stephen Lekan	9347 Parkway Drive	(708) 263-5732	Locate Lines/B-box	lp	needs bbox located.	WT/SW	y	kr/tw		
10/13/2020	9:13 AM	Carol Nichols	9125 Wildwood Drive	(219) 613-5184	Dead Tree/Status?	lp	has possible dead tree in parkway. Can you please take a look and let her know because resident wants it down because she thinks it is hollowed out. Tree not dead	mark	y	mk	10/14/20	
10/13/2020	9:32 AM	Arthur James	9441 Parkway Drive	(312) 608-6302	Locate Lines/B-box	lp	needs bbox locatted. To fix inside valve. Paul going to locate it.	WT/SW	y	pb		
10/13/2020	1:48 PM		2225 Whispering Oaks Ct		Garbage Can Replacement	lp	needs their recycle bin replaced. Messaged eric		y	lp	10/13/20	1:48 PM
10/13/2020	2:18 PM	Irene	3303 North Drive	(219) 923-3874	Dead Tree/Status?	lp	possibly has a dead tree in parkway that is dropping large limbs think it might be dead.	mark	y	mk	10/14/20	
10/14/2020	8:56 AM	Carol	9528 Saric Dr	(219) 924-2284	Dead Tree/Status?	kw	Resident feels the tree is diseased and would like it looked at and has questions. The one in front of the house is the one they are concerned with. Trees are not diseased	mark	y	mk	10/14/20	
10/14/2020	9:38 AM		2948 Franklin Street		Garbage Can Replacement	lp	resident had can damaged yesterday messaged eric for replacement		y	lp	10/14/20	9:39 AM
10/14/2020	2:21 PM	George Kvarta	9008 Cottage Grove Ave	(219) 218-1579	Dead Tree/Status?	lp	has trees in the parkway that are damaging the sidewalks really bad.	mark	y	mk	10/14/20	
10/15/2020	1:38 PM	Donald Scheidt	8026 Spruce Street	(219) 923-4652	Locate Lines/B-box	kw	Check bbox. Resident had lawn aerated and thinks the bbox may have been damaged, it is lose Back yard, almost even with the garage in center of backyard Paul replaced lid and extension	WT/SW	y	pb		
10/20/2020	9:21 AM		9008 Price Place		Leaves Pickup	lp	leaves were missed for yesterdays route resident said there are no branches mixed in just leaves ..Gave to Grant for today	Street	y	bkb		
10/20/2020	2:38 PM		Highway Ave		Sink Hole	lp	possible sink hole by sewer close to the church on highway and cottage grove	WT/SW				
10/20/2020	2:48 PM	Pat	9302 Spring Street	(708) 220-6035	Locate Lines/B-box	lp	wants bbox locatted doing work over the weekend. B - Box is marked	WT/SW	y	pb		
10/21/2020	1:03 PM		3738 43rd Street		Leaves Pickup	lp	leaves were missed for yesterdays route resident said there are no branches mixed in just leaves.Gave to Grant and crew.	Street	y	bkb		
10/21/2020	2:51 PM	Thomas Hall	9327 Parkway Drive	(219) 313-5872	Locate Lines/B-box	lp	needs bbox locatted. Having inside valve replaced. B - Box has been repaired and marked	WT/SW	y	tw/kr		
10/21/2020	2:55 PM		9321 Orchard Drive		Leaves Pickup	lp	leaves were missed no branches mixed in..Gave to Grant and crew.	Street	y	bkb		
10/22/2020	9:46 AM		3052 Lakeside Dr		Other: See Notes	lp	sewer in front of house water is not going down. Cleaned it off and still nothing if someone can take a look at it.	WT/SW	y	ak		
10/22/2020	11:10 AM	Ostroski	3432 Grand Blvd	(219) 923-1142	Sewer Backup	lp	resident had sewer back up in house	WT/SW	y	ak		
10/22/2020	11:54 AM		2735 Grand Blvd		Dead Animal	lp	has had a dead animal in front of their house since Monday. I told jeff about it, so not sure what is going on.	Street	y	bkb		
10/22/2020	12:29 PM		3527 41st Street		Other: See Notes	lp	sewer in front of house water is not going down. Cleaned it off and still nothing if someone can take a look at it.	wt/SW	y	ak		
10/27/2020	8:47 AM		3923 Wicker Ave	(708) 305-1868	Other: See Notes	kw	Requested a second recycle bin a couple weeks ago and still has not received it. Sent a text to Eric					
10/27/2020	10:32 AM	Henry	2916 Lincoln St	(219) 743-7865	Tree/Branch Issues	kw	check status of (3) trees in parkway and advise resident	Mark				
10/28/2020	8:43 AM		3039 Strong Street		Leaves Pickup	lp	leaves were missed for yesterdays route	Street	y	bkb		
10/29/2020	1:48 PM		Kennedy & 41st		Traffic Light Out	lp	northbound kennedy at 41st street red light out inner lane. Gave to jeff will get it tomorrow	Street	y	lp		
11/2/2020	7:43 AM	Highland Police Dept	9140 Highland Street		Other: See Notes	lp	smashed pumpkins all in the street and curb in front of 9140 Highland street.	Street	y	bkb		
11/2/2020	8:19 AM		3893 Clough Ave		Tree/Branch Issues	lp	Branches hanging over street. Texted jeff.	Street	y	bkb		
11/2/2020	11:09 AM	Hope Cementary (tim)	8900 Block of Kleinman	(219) 616-1776	Other: See Notes	lp	needs meter pulled for winter. Meter has been pulled 10/9/20	WT/SW	y	pb	10/9/20	
11/2/2020	12:44 PM		Lincoln/ Indy		Other: See Notes	lp	going west bound on lincoln the light at lincoln and indy next to family express does not change lights in the early morning. Lady stated she sits there for 10 mins and ends up running light because it doesn't change if someone can take a look at that. Seemed good to me.	Street	y	bkb		
11/3/2020	8:45 AM		9645 5th Street		Other: See Notes	lp	Corner of 45th and 5th glass in the road	Street	y	bkb		
11/5/2020	11:06 AM	Darius Matthews	9021 Ohio Place	(219) 775-9968	Dead Tree/Status?	lp	thinks he has a dead tree in the parkway the appears to be dead. Dropping big branches.	Mark				
11/5/2020	1:45 PM	David Zuick	2104 Northwood Lane	(219) 934-9184	Other: See Notes	lp	turn off the sprinklers and have them winterized and the back flow preventer and the valve are still dripping water when water is completely off. Water is off in pit and meter is pulled	WT/SW	y	pb	11/12/20	
11/9/2020	8:39 AM	James	8348 Grace Street		Dead Animal	lp	has a dead possum in street in front of house	Street	y	bkb		
11/9/2020	9:00 AM	Joseph	3117 Maple Drive	(219) 730-5755	Dead Tree/Status?	lp	has a tree in the parkway has a big hole in tree and seems to be hollo, said if someone can take a look at it to possibly have it removed in the spring	Mark				
11/9/2020	9:48 AM		Whispering Oaks and Prairie		Other: See Notes	lp	has had a temporary stop sign for several weeks, wanted to remind us that it is still there. We know.	Street	y	bkb		
11/9/2020	12:01 PM		3600 block of franklin		Other: See Notes	lp	vacant lot someone dumped garbage and a garbage can right at the entrance of the woods there if someone can pick that up	Street	y	bkb		
11/9/2020	2:02 PM		8700,8800,8900 blocks of prairie		Other: See Notes	lp	west side of street there are a ton of road work ahead signs down on the sidewalks. Don't know if those are ours or not but resident said they are covered in leaves and are a tripping hazard. They are gone.	Street	y	bkb		
11/11/2020	10:36 AM	Dans Pierogis	2945 Jewett		Tree/Branch Issues	lp	tree in front has low hanging branches into parking spot and people can't get out of their cars without getting hit by them.	Street				
11/11/2020	3:11 PM		cottage grove ave and franklin		Other: See Notes		cottage grove ave and franklin street shattered glass in intersection.Gave to Lou.	Street	y	bkb		
11/12/2020	2:26 PM				Other: See Notes	lp	police dept called in graffiti on the dog pound ..Dennis lookimg into it and will take care of if needed.	Street	y	bkb		
11/16/2020	8:49 AM		3200 block of Ridge Road		Leaves Pickup	lp	lady called and left a message Friday night saying she lives on the 3200 block of ridge road and that her leaves were missed last weeks ...Depends on which side of Ridge Road shes on..North side zone 3 or South side is zone 6...if this is 3227 Ridge Rd, there are branches mixed in with the leaf pile.	Street	y	bkb		
11/17/2020	12:28 PM	Jennifer Woods	3425 Wirth Rd	(815) 615-6761	Other: See Notes	kw	Leaf truck drove into the parkway yesterday during pick up and caused ruts. Please check and call resident..looks like a mail truck did it. KW -Occurred yesterday after leaf pickup added to plow damage for spring restorations. You guys are the best!! Taken care of!	Street	y	bkb		
11/18/2020	7:57 AM		9512 Erie Street		Leaves Pickup	lp	said the leaf truck came down her street and missed her	Street	y	bkb		
11/19/2020	8:12 AM	Art	3324 42nd Street	(312) 217-2490	Tree/Branch Issues	lp	resident said he had a parkway tree get uprooted from the wind...Laying in the parkway, wil get with the loader stops.	Street	y	bkb		
11/19/2020	1:46 PM		8937 Woodward		Tree/Branch Issues	kw	Tree fell from ditch area blocking road. Crew has been sent out to get it	Street	y	kw		

11/25/2020	8:52 AM		8733 Cottage Grove Ave		Garbage not picked up	lp	east side of cottage grove ave garbage was missed. Messaged eric		y	lp	11/25/20	8:52 AM
11/25/2020	3:47 PM		3311 Grand Blvd		Leaves Pickup	lp	said his leaves have been out since last week and were not picked up. Picked up.	Street	y	bkb		
11/30/2020	11:35 AM		2440 Walnut Dr		Garbage Can Replacement	kw	needs new garbage can/lid is cracked. Texted Eric		y	kw	11/30/20	11:36 AM
11/30/2020	12:45 PM	Brice Turner	8721 Park Drive	(815) 690-3425	Dead Tree/Status?	lp	has a tree in front parkway very hollow and is afraid it is going to fall	Mark				
12/1/2020	12:12 PM		2614 Jewett Ave		Garbage Can Replacement	kw	can has large hole in the lid, needs replaced. Sent a text to Eric		y	kw	12/1/20	12:13 PM
12/3/2020	2:29 PM	Gail	9523 Saric Drive	(219) 712-9405	Tree/Branch Issues	lp	tree was taken down about 5-6 weeks ago and stump has not been removed yet they said they would be back in two weeks	Mark				
12/7/2020	9:28 AM		Seberger Farms		Street Light Out	lp	street light out at the corner of 43rd and Seberger Drive. Jeff changed the light bulb.	Street	y	bkb		
12/8/2020	8:22 AM		2704 Glenwood		garbage can replacement	kw	needs new recycle can, lid has holes. Sent a text to Eric		y	kw	12/8/20	8:23 AM
12/8/2020	3:52 PM	Tyler	9003 Ohio Place	(219) 381-0279	Locate Lines/B-box	lp	needs bbox locatted. Gave to Paul, needs to be dug up, locates called.	WT/SW	y	bkb		
12/9/2020	3:12 PM		2904 Clough Ave		Leaves Pickup	lp	resident has leaves out front. In zone 5, didn't know if they will be back through there or not. Wil send leaf vac today.	street	y	bkb		
12/10/2020	9:14 AM		2711 38th Street		Leaves Pickup	lp	resident has leaves out in parkway. Picked up,	Street	y	bkb		
12/10/2020	9:25 AM		3034 101st Street		Leaves Pickup	lp	leaves in parkway, check rest of cul de sac as well (will have them out Friday morning 12/11/20) picked up.	Street	y	bkb		
12/10/2020	12:52 PM		8715 Liable Road		Leaves Pickup	lp	leaves out in parkway..Gone!	Street	y	bkb		
12/10/2020	1:18 PM		9846 5th Street		Leaves Pickup	lp	leaves will be out in parkway for Friday pickup ..picked up.	Street	y	bkb		
12/10/2020	1:23 PM		3337 Lincoln Street		Leaves Pickup	lp	leaves will be out in parkway for Friday pickup ..picked up.	Street	y	bkb		
12/11/2020	8:40 AM		3139 Lakeside Drive		Tree/Branch Issues	lp	resident has branches out in parkway, was wondering if they could get them picked up sometime this afternoon (has a little more to put out still)	Street	y	bkb		
12/11/2020	12:47 PM		9149 Prairie Ave		Leaves Pickup	lp	leaves out in parkway.	Street	y	bkb		
12/11/2020	2:38 PM	American Legion	2703 Jewett Ave		Leaves Pickup	lp	leaves in alleyway. Been there for a few weeks now	Street	y	bkb		
12/15/2020	10:12 AM	Denise (B&D sewer)	9930 Express Drive	(219) 322-2300	Other: See Notes	lp	needs a pressure test/ water main inspection done on Wednesday 12/16/20 between 10-10:30am at 9930 Express Drive. Spoke to tim he said he will make sure someone is available tomorrow for that.	WT/SW	y	pb		
12/17/2020	3:52 PM	ramon	3028 Eder Street	(708) 275-3963	Water Pressure	lp	ever since water break 3 weeks ago their water pressure has been really low Kyle went to change meter	WT/SW	y	kr/tw	12/18/20	
12/21/2020	9:15 AM		3738 Sandalwood Drive		Other: See Notes	lp	has a ton of bird poop in street and would like street sweeper to come through..Sent Lou.	Street	y	bkb		
12/29/2020	1:18 PM	Smock	2548 Clough Ave	(219) 775-7738	Leaves Pickup	lp	cul de sac has leaves and branches are at the end of the cul de sac in vacant lot said it has been there over a month and no one has gotten them. Said all the neighbors put their branches and leaves there for us to pick up.	Street	y	kh		

Call Log 2021

Call Log 2021

Date	Time	Resident Name	Address	Phone #	Nature of Call	Received by:	Notes	Dept	Resolved Y	By Whom	Date	Time
1/7/2021	2:37 PM		2920 98th Street		Snow Plow Damage	lp	nipsco box knocked down by plow at the beginning of the week. It was an AT&T pedalstal that the top came off from, gave to Kevin and Tim to put top back on.	Street	y	bkb		
1/11/2021	10:06 AM		3408 Highway Ave		Street Light Out	lp	street lamp out he said close to grace on highway did not see it on nipscos page as theirs ..Wil notify Nipsco, its theirs.	Street	y	bkb		
1/12/2021	9:05 AM		9034 Ohio Place		Other: See Notes	lp	resident called there is a ton of shattered glass in the street. Lou took care of it.	Street	y	bkb		
1/15/2021	8:53 AM	Paul	8042 North Drive	(269) 689-9460	water pressure	lp	has been experiening really low pressure all throughout residence since Monday. Can someone please look into this.called and left message to call for someone to come out	wt/sw	y	tg		
1/19/2021	8:54 AM	Jim	9230 Parkway Drive	(219) 730-8060	Locate Lines/B-box	lp	needs bbox located and makes sure it can be shut off. Has valve inside leaking pretty badly. Gave to paul.B-box needs repaired scheduled for 1-21-21/repaired on 1/22/21	wt/sw	y	tg		
1/19/2021	1:20 PM		9648 Liable Road		Other: See Notes	lp	resident stated there was an accident on the corner and there is a lot of debris in the road still..All good now.	Street	y	bkb		
1/19/2021	2:49 PM		9415 Kennedy Ave		Mailbox damaged	lp	mailbox damaged from plow..Mailbox was leaning some, Sean and Dennis straightened it back up, should be good for now.	Street	y	bkb		
1/20/2021	2:48 PM	Daniel	9217 Grace Street	(630) 747-1963	Dead Tree/Status?	lp	tree in parkway struck by vehicle last night and it was uprooted. Mark said we would come and get it. It is a smaller tree	Street				
1/21/2021	9:16 AM		ridge and 2nd		Traffic Light Out	lp	stop light out northbound at 2nd and ridge, red light on the right side. Gave to jeff going to see if it's just the bulb that's burnt out. Light changed	Street	y	lp	1/21/21	3:03 PM
1/21/2021	11:00 AM	David Brown	3425 Laverne Drive	(708) 475-5500	Sewer Backup	lp	is having sludge back up into their sump pump from the drain in the backyard. Had a plumber out and they said they can't touch it because it is our sewer drain. Wants someone to call him when they are coming cause he wants to talk to them.	wt/sw	y	ak		
1/22/2021	3:20 PM		Parrish Ave		Other: See Notes	lp	on parrish right before laporte on the south side there is glass all in the road .. All gone.	Street	y	bkb		
1/25/2021	8:23 AM		Orchard and Wirth		Sign down/damaged	lp	stop sign at the corner of orchard and wirth was hit over the weekend. Was given to jeff he is going to take a look at it. Need to install new sign.	Street	y	bkb		
1/26/2021	8:16 AM		laporte street		Other: See Notes	lp	wants to if they can plow the alley on laporte between parrish and delaware. It does not go through all the way but they park in their garages there and said it often gets missed when they are plowing. Its been plowed and it goes all the way thru.	Street	y	bkb		
1/26/2021	8:50 AM		8429 Liable Road		Other: See Notes	lp	road is not getting plowed and snow being piled up from laporte to where they can't even get through ..It was plowed.	Street	y	bkb		
1/26/2021	10:20 AM		3822 Sandalwood		Other: See Notes	lp	said snow was piled into driveway and wants the guys to plow it on the other side where there are no houses. Said he has called in regards to this before. Talked to Dennis about this.	Street	y	bkb		
1/26/2021	10:55 AM	Shurlow	3127 Condit Street	(219) 455-7689	Locate Lines/B-box	lp	needs bbox located to have water shut off to replace a leaking valve. Will have someone coming to work on it 1/27/2021. needs water shut off as late as possible.	wt/sw	y	tg		
1/26/2021	11:47 AM	Jason Ross	9521 Spring Street	(219) 808-9838	Locate Lines/B-box	lp	needs bbox located and water shut off sometime tomorrow 1/27/2021. can haver it shut off at anytime someone can head over there.	wt/sw	y	tg		
1/26/2021	12:30 PM		9619 Kennedy Ave	(312) 479-6151	Christmas Tree Pickup	lp	resident has a christmas tree out front that needs to be picked up.Picked up.	Street	y	bkb		
1/26/2021	2:03 PM		3102 E 99th Street		Other: See Notes	lp	said he is the end of the cul de sac and every snow he gets blocked into his driveway with snow. Was wondering if we can move it to the side of the driveway in the grass. Said he can't get out of his driveway without shoveling. Talked to Brenden about this.	Street	y	bkb		
1/27/2021	7:41 AM	Michael	3040 98th Place West	(219) 796-3970	Other: See Notes	lp	resident lives at end of cul de sac, wants to know if we can push snow further off the road at the end of the street they have 3 cars and have to park in the street and cant when the snow is packed up there. Doesn't mind that its put there but just wants it pushed further up. thanks! Will do our best to accommodate them.	Street	y	bkb		
1/27/2021	7:42 AM	Tracy Ryan	8926 Ohio Place	(219) 545-8895	Other: See Notes	lp	lady was not happy that her driveway was plowed in. wants it to not happen again. Returned the call/Mark checked the driveway this morning, it was cleared by the resident.	Street	y	kw		
1/27/2021	9:39 AM		2138 Terrace Drive		Mailbox damaged	lp	mailbox damaged from plow. Sent to jeff to look at ..Fixed.	Street	y	bkb		
1/27/2021	9:55 AM		9447/ 9449 Spring Street		Mailbox damaged	lp	resident wants to know if we can put something up to prevent this from happening. Gave to jeff ...No,that's not are reponsiblilty, we wil fix what we damaged only, the mailbox. Taken care of.	Street	y	bkb		
1/28/2021	10:25 AM		Waymond ave		Other: See Notes	lp	said waymond ave is very slick and wants some salt thrown down.	Street				
1/28/2021	2:41 PM		3319 Highway Ave		Other: See Notes	lp	resident called for a recycle bin. Texted eric		y	lp	1/28/21	2:42 PM
1/29/2021	7:48 AM	Thomas	3525 Franklin Street	(773) 791-6033	Garbage not picked up	lp	resident called Tuesday stating a tv box (with no tv in it) was not picked up. I messaged eric and the box was not picked up again on Thursday. Messaged eric again to find out why this box isnt being picked up.		y	lp	1/29/21	7:50 AM
1/29/2021	10:04 AM	Nicole	8144 Grace Place	(219) 746-0629	Water Break	lp	possible water break. Resident called has water coming up in her back yard near a dewer drain. Resident is home if needed. Gave to tim. Was a leak has been repaired	wt/sw	y	tg		
1/29/2021	12:49 PM	Earl	3921 Price Circle	(219) 923-3446	Other: See Notes	lp	noticing a lot of air in the water line when he turns on the water it takes a while for it to come out. Been happening for about a month now and getting worse.	wt/sw				
1/29/2021	1:00 PM	Bill	9344 Indianapolis Blvd	(219) 924-4955	Sewer Backup	lp	see if city sewer is clear. Plumber came out and said to have city main checked first. Backing up into dishwashers. 708-297-4527. owner of the building (sofias pancakes) open 7am-3pm on weekdays our sewer is fine	wt/sw	y	tg		
2/1/2021	8:30 AM		9148 Southmoor Ave		Mailbox damaged	lp	mailbox damaged. Said there are a few more on the street as well. Give to Jeff.	Street	y	bkb		
2/1/2021	8:40 AM	Mireles	8922 Kennedy Ave		Snow Plow Damage	lp	parkway on the side of the house on 37th street is tore up from plow. Will add to the list.	Street	y	bkb		
2/1/2021	9:16 AM	Jack Rose	9247 Kennedy Ave		Mailbox damaged	lp	mailbox was damaged tried to put it back on but seems not right .Make a list and give to Jeff.	Street	y	bkb		
	12:00 AM	9:50 AM	Wicker Park Dr		Other: See Notes	kw	Resident states the plowing is about 3 feet off the curb and they can't park there cars on the street. Asking to please remove the snow to the curb.Looked good to me, yes there are a few spots that are off the curb,talked to Grant about gettig closer to the curb.	Street	Y	bkb		
2/1/2021	10:09 AM		Norman & 4th Ave		Other: See Notes	lp	resident stated that Norman and 4th Ave has not been plowed all weekend. This area looked just fine unless they are talking about the private drive that goed south on 4th from Norman which we don't plow.	Street	y	bkb		
2/1/2021	10:11 AM		George & Forrest		Other: See Notes	lp	resident called and said that there isn't enough room for more than one car in the road at the corner of george and forrest.Sean pushed the corner other than that it looked fine to me.	Street	y	bkb		
2/1/2021	10:12 AM		Alti Ct		Other: See Notes	lp	resident left a voicemail on 1/31/21 saying that the plow pushed all the snow from the cul de sac into the end of their driveway. Didn't see anything that would indicate that, all driveways were clear.	Street	y	bkb		
2/1/2021	10:14 AM		Juniper Trail		Other: See Notes	lp	all of the mailboxes are blocked with snow. Resident said a lot of ederly people live over there and the mail person will not get out of their vehicle to out mail in mailboxes if they are blocked. 10-12 inches of snow, not much room on that street to remove snow, most of the mailboxes were cleared by many of the residents which should be their responbility.	Street	y	bkb		
2/1/2021	10:15 AM	Sandra	2434 Clough Ave	(219) 801-0885	Other: See Notes	lp	lady owns the apartments at the end of clough snow was pushed up into the parking area for these cars and the cars cannot even be seen from the street the snow is piled in so high. Residents can't get out. She called 1/31 and again today in regards to this	Street	y	tg		
2/1/2021	10:19 AM	Robert Moore	3704 43rd Street		Other: See Notes	lp	neighbors at 3709 and 3707 have big ice boulders in the street in front of their driveways and they are both elderly. The neighbor tried moving them but they are too heavy was wondering if a plow could come through . All clear.	Street	y	bkb		
2/1/2021	10:27 AM		2600-2700 Block of Eder		Other: See Notes	lp	voicemail left 1/31 resident said the snow was about 3/4 feet from the curb.Maybe a bit of a streach with the 3/4 feet, but yes could have been closer to the curb, talked to Grant about it.	Street	y	bkb		
2/1/2021	10:29 AM		10231 Birchwood Circle		Other: See Notes	lp	called this morning they are the first house on the right hand side when entering the cul de sac. All of the snow from the other street was pushed right into their driveway. Elderly couple and had a hard time clearing a path to get out of the driveway.We will be mindful the next time we get a large snow so as to avoid this situation again.Talked to the drivers about it.	Street	y	bkb		
2/1/2021	10:31 AM	Jackie	8201 Grace Street	(312) 907-3774	Other: See Notes	lp	she lives at the t of maple and grace and said all the snow gets dumped in her yard.Snow has to go somewhere and the parkways are the best place for it.	Street	y	bkb		
2/1/2021	10:33 AM	Rachel	3721 Jewett		Other: See Notes	lp	left vm complaining about snow backed up into driveway.Street was plowed and the snow always ends up across residents driveway which they remove while clearing their driveways, we don't clear driveways we plow streets.	Street	y	bkb		
2/1/2021	10:34 AM	Barbara	99th Place East		Other: See Notes	lp	resident called complaining about 2 to 3 piles of snow being piled up into her driveway. Sean widened the cul da sacs in Lakeside the best he could said that block had to many cars parked in the street to do anything at night.	Street	y	bkb		
2/1/2021	10:35 AM		9536 Liable Road		Other: See Notes	lp	called and lvm on 1/31 complaining about the snow being pushed into their driveway.Street gets plowed and the snow will end up across residents driveway,this is on a straight run and we wouldn't push snow into their driveway.No snow in driveway last night.	Street	y	bkb		
2/1/2021	10:36 AM	Lucas	2644 81st Street	(765) 977-2366	Other: See Notes	lp	called complaining that the snow is being piled into his neighbors driveway and his moms and they are to elderly to move the snow out of the driveway.Everyone gets snow in their driveways when we plow the streets doesn't help when we get 10-12 inches of snow.	Street	y	bkb		
2/1/2021	10:40 AM		2315 Buddy Ct		Other: See Notes	lp	mailbox blocked in.Kevin removed the snow.	Street	y	bkb		

2/1/2021	10:40 AM	Dorothy	2034 Briarwood Drive	(219) 924-4119	Other: See Notes	lp	end of the driveway mailbox is blocked in and is elderly and can't clear it. Looked good, snow ends up curb side when the street gets plowed.Maybe resident had to clear more than normal since this is on a curve.	Street	y	bkb		
2/1/2021	10:43 AM		2011 Ramblewood Drive		Other: See Notes	lp	all of the snow gets pushed in front of her mailbox wants to know if it can be pushed the other way.Mailbox is open, but will talk to small truck driver again.	Street	Y	bkb		
2/1/2021	10:43 AM		8836 Parrish Ave		Other: See Notes	lp	called in today and said that alley was not plowed resident got stuck trying to get out for work this morning.East/West alley was pushed with a backhoe tonight,behind this address is a grass easement with no garages facing the easment.	Street	y	bkb		
2/1/2021	10:43 AM		8720 Carolina		Other: See Notes	lp	alley not plowed resident called in today..it was plowed by me last night, but will send a machine thru tonight.	Street	y	bkb		
2/1/2021	10:45 AM	Shelia	2128 Teakwood Circle	(219) 201-4547	Other: See Notes	lp	mailbox got completely plowed in 6 feet all around her mailbox. Kevin cleared the snow.	Street	y	bkb		
2/1/2021	11:30 AM		44th Street		Other: See Notes	lp	44th street in blvd estates snow isn't being pushed all the way into the island and now it is being left 6 ft into the street.Lou pushed it back more.	Street	y	bkb		
	12:00 AM		9447 Spring St	(219) 313-0718	Mailbox damaged	kw	2 mailboxes hit and leaning, please fix and stop hitting them.One box is leaning a little and both are still standing but give to Jeff.	Street	y	bkb		
2/1/2021	12:23 PM	Stephanie White	2042 Northwood Lane	(219) 924-2417	Mailbox damaged	lp	mailbox was hit over the weekend. Resident is home and wants someone to let her know when it is completed; called lady back jimmy saw it get hit by the landscaping company,	Street	y	lp	2/1/21	3:09 PM
2/1/2021	12:29 PM		10250 Kennedy Ave		Mailbox damaged	lp	mailbox got knocked down. Needs to be replaced gave to jeff	Street	y	bkb		
2/1/2021	12:30 PM	Susan	10250 Kennedy Ave	(219) 359-8512	Other: See Notes	lp	both entrances of the driveway were blocked cannot get in or out and is a senior citizen. Wants it taken care of or wants a phone call. Driveways arent even cleared and when the street gets plowed all snow goes toward the curb which results in snow being sent across the driveways which residents then remove along with the snow in their driveways.This happens everywhere.	Street	y	bkb		
2/1/2021	1:15 PM	Irene Teets	2147 Oakwood Court	(219) 934-0554	Other: See Notes	lp	mailboxes were blocked and that it is the worst plow job she has ever seen. she wants the person who did the job fired. Kevin removed the snow.	Street	y	bkb		
2/1/2021	1:34 PM	Lavita Salon	9636 Forrest Drive		Other: See Notes	lp	parking lot plowed in cannot get into parking lot. Then they need to have their service come out sooner than later,street gets plowed the same every time.	Street	y	bkb		
2/1/2021	2:09 PM		2307 Buddy Ct		Other: See Notes	lp	mailbox is blockedby the snow and the mail will not be delivered. Kevin removed the snow.	Street	y	bkb		
2/1/2021	2:17 PM		3726 Sandalwood		Other: See Notes	lp	mailboxes are blocked by the snow, mail cannot be delivered.Seemed all good to me.	Street	y	bkb		
2/1/2021	3:13 PM	Brian Waddle	2137 41st Place		Other: See Notes	lp	road seems to still be really bad and not cleared. Seemed good to me last night.	Street	y	bkb		
2/2/2021	8:19 AM		2800 block of garfield/franklin		Other: See Notes	lp	resident got stuck in the alley, said it has not been plowed. Messaged jeff	Street	y	lp		
2/2/2021	8:37 AM		2336 Terrace Drive		Other: See Notes	lp	mailbox is plowed in resident cannot get to it. Gave to tim	Street				
2/2/2021	8:38 AM		8821 Schneider		Other: See Notes	lp	left a vm last night saying their street behind top notch was still really bad Jimmy is taking care of it	Street	y	tg		
2/2/2021	9:14 AM		2033 Ramblewood Drive		Other: See Notes	lp	cannot get to mailbox. Messaged tim	Street				
2/2/2021	9:39 AM	Diana	8810 Southmoor Ave	(219) 805-1002	Locate Lines/B-box	lp	needs water turned on looks like previous owners had it shut off. Would be available tomorrow afternoon after 3 if someone can call before heading over there to meet someone. Gave to paul he will head over there around 3	wt/sw				
2/2/2021	10:02 AM	Loretta Westburg	3543 45th St	(219) 922-1450	Mailbox damaged	kw	mailbox damaged by plow, texted Jeff	Street				
2/2/2021	12:00 AM		2717 Wicker Ave		Other: See Notes	lp	back alley has not been plowed.Its plowed.	Street	y	bkb		
2/2/2021	10:42 AM		3513 45th Street		Mailbox damaged	lp	. Mailbox was hit by a plow, resident put the box up by the house. Messaged jeff	Street				
2/2/2021	10:52 AM		2723 Ross Street		Other: See Notes	lp	resident said neighbor that left car in the street during the snow just left was wondering if a plow can come through .Taken care of.	Street	y	bkb		
2/2/2021	12:28 PM		9328 Cline Ave		Mailbox damaged	lp	mailbox leaning. Gave to jeff	Street				
2/2/2021	12:39 PM		10407 Timberidge Lane		Other: See Notes	lp	resident said road is still really bad. Was wondering if someone can come down and plow again. Widen it out the best I could without putting to much snow back into driveways, but im sure they will still complain, cleaned up the corners as well.	Street	y	bkb		
2/2/2021	1:06 PM		8531 Kleinman Road		Other: See Notes	lp	mailbox is blockedby the snow, messaged tim	Street				
2/3/2021	1:06 PM	Trinity	8210 Wicker Park Drive	(219) 407-4060	Garbage not picked up	lp	garbage was not picked up yesterday, messaged eric		y	lp	2/3/21	7:33 AM
2/3/2021	8:12 AM		3128 43rd Street		Garbage not picked up	lp	whole south side of the street garbage was missed, messaged eric		y	lp	2/3/21	8:12 AM
2/3/2021	8:13 AM		3240 Lincoln St		Recycle not picked up	kw	Recycling missed, sent text to Eric		y	kw	2/3/21	8:14 AM
2/3/2021	8:39 AM		9034 Cottage Grove Ave		Recycle not picked up	lp	Recycling missed, sent text to Eric		y	lp	2/3/21	8:39 AM
2/3/2021	8:46 AM		Teakwood Circle		Other: See Notes	lp	still has a lot of snow in the street was wondering if the plow could come through again before it freezes this weekend was cleaned up on 2/4/21	Street	y	tg	2/4/21	
2/3/2021	8:53 AM	Barbara	9012 Cottage Grove Ave	(219) 838-9439	Recycle not picked up	lp	Recycling missed on the whole block, sent text to Eric		y	lp	2/3/21	8:54 AM
2/3/2021	9:40 AM		8216 Kennedy Ave		Other: See Notes	lp	alley was plowed last night and piled it in front of businesses parking lot, owner tried to snow blow it but couldn't cause of the ice was wondering if a plow could come through and get it. Messaged tim. We did not plow that alley last night.	Street	y	bkb		
2/3/2021	10:45 AM		3237 Condit Street		Other: See Notes	lp	a bunch of snow with dirt and rock was all pushed into her driveway was wondering if someone can come through and take a look at it. Resident called back someone came and took care of it for her.	Street	y	lp	2/3/21	12:29 PM
2/3/2021	10:52 AM		3122 Lois Place		Garbage not picked up	lp	garbage was not picked up yesterday on whole side of the block,messaged eric		y	lp	2/3/21	10:53 AM
2/3/2021	12:31 PM	Kim Boss	3043 Hess Drive	(219) 972-0102	Restorations	lp	parkway was tore up from plow .Will fix it in the spring.	Street	y	bkb		
2/3/2021	12:44 PM	Barbara Ociepka	2033 Ramblewood Drive	(219) 922-0858	Restorations	lp	parkway was tore up from plow.Will fix in the spring.	Street	y	bkb		
2/3/2021	12:50 PM		45th and Gordon Drive		Street Light Out	lp	street lamp out on the N/E corner of 45th and Gordon by the fire station. Reported outage to nipsco	Street	y	lp	2/3/21	12:51 PM
2/4/2021	7:59 AM		Oakwood Ct		Other: See Notes	lp	when they went and plowed timberidge Lane they said more snow was put into the street of oakwood circle wants to know if the plow can come back down that street checked the area at 6:45 on 2/5/21 and it all looks fine	Street	y	tg	2/5/21	6:45am
2/4/2021	8:39 AM		9033 Parrish Ave		Other: See Notes	lp	driving on her grass to get to the pump station need to open up the other drive to get there .Give to Mikes Guys.	Street	y	bkb		
2/4/2021	9:03 AM		8111 Sycamore Ave	(219) 315-7381	Garbage Can Replacement	lp	garbage is cracked all the way down and a big chunk of the lid is gone. Messaged dave		y	lp	2/4/21	9:07 AM
2/4/2021	9:05 AM		3226 Lincoln Street		Recycle not picked up	lp	recycling was missed on Tuesday. Messaged dave		y	lp	2/4/21	9:07 AM
2/4/2021	9:49 AM		10023 Wildwood Lane		Other: See Notes	lp	mailbox plowed in cannot get to it	Street				
2/4/2021	3:12 PM	James Lawdanski	9605 Erie Street	(219) 218-2316	Locate Lines/B-box	lp	resident needed bbox locatted and shut off for water flooding the basement. Tim called kyle to go shut off b- box was dug up and repaired then shut off	wt/sw	y	tg	2/4/21	1pm
2/5/2021	8:13 AM		9128 Spring Street		Mailbox damaged	lp	mailbox knocked off from plow. Gave to jeff, Jeff replaced mailbox. Guy called to thank him for the great work	Street	y	lp	2/8/21	9:12 AM
2/5/2021	9:31 AM		3639 42nd Place		Other: See Notes	lp	snow was plowed into her driveway, she couldn't get it with a shovel this morning cause it was frozen. Wants to know if there's anything we can do she said she will not be able to get into her driveway when she gets home from work.told her we don't do that, wanted to let us know anyway. Correct,we do not do that.	Street	y	bkb		
2/5/2021	9:42 AM		2908 W. 4th Place		Other: See Notes	lp	alley needs to be plowed. Resident can't get through alley.Plowed.	Street	y	bkb		
2/5/2021	10:02 AM		9512 Erie Street		Other: See Notes	lp	snow was plowed into her driveway, she couldn't get it with a shovel or snow blower this morning cause it was frozen.told her we don't do that, wanted to let us know anyway. Correct,we do not do that.	Street	y	bkb		
2/5/2021	10:28 AM	Lorraine	9204 Wildwood Drive	(219) 838-5933	Other: See Notes	lp	lady had orange sticks in her parkway and two red reflectors to show the plow guys where her parkway was. She just resodded last year. Sticks and reflectors were broken and she is upset that her side of the street was damaged and not the neighbor who has them across the way were not. jeff is going to replace the orange sticks	Street	y	bkb		
2/5/2021	2:26 PM		3010 Lakeside Drive		Mailbox damaged	lp	mailbox is damaged. Texted jeff	Street	y	bkb		
2/5/2021	2:30pm		10036 Erie Place		Water Break	kw	water flowing doen sidewalk water break	wt/sw				
2/8/2021	7:38 AM	Highland PD	43rd and Farmer		Water Break	lp	possible water break. Pd called said someone called it in to them.	wt/sw	y	bkb		
2/8/2021	8:00 AM	Buyco	8958 Parrish Ave		Other: See Notes	lp	said he has no water and cannot flush his toilets thinks he has frozen lines. Gave to tim	wt/sw				
2/8/2021	8:08 AM		99th and 5th Street		Other: See Notes	lp	resident said there are big ice chunks in the walkway where the kids cross for school, was wondering if someone could come clear them. He said he tried and could not move them. Said kids are walking in the street and it is a hazard	Street				
2/8/2021	12:07 PM	Ray	8958 Parrish Ave	(219) 629-2029	water meter	lp	water meter is leaking wants to know if someone can take a look at it this week and possibly change it. Same house that called this morning about frozen lines so not sure if that is why meter is leaking. Left a home phone number as well. 219-838-7114. matt going to change meter.	wt/sw	y	lp		
2/9/2021	8:56 AM	Ralph	3649 45th Street	(219) 924-4898	Mailbox damaged	lp	mailbox was damaged last night .Repaired.	Street	y	bkb		
2/9/2021	9:29 AM	Victor	10113 4th Place	(219) 951-8087	Sewer Backup	lp	resident said he is having backup into his basement. Called matt to take a look at it, man holes are flowing. Resident issue	wt/sw	y	lp		
2/9/2021	12:21 PM		Industrial Court		Other: See Notes	lp	wants to know if we can salt that, because the street is a sheet of ice. Told him they don't typically plow cul de sacs, and he stated he pays enough in taxes that we should salt it before someone is killed. I told him I would pass the word along.Taken care of.	Street	y	bkb		
2/9/2021	2:53 PM	Mike	3533 45th Street	(219) 678-4762	Mailbox damaged	lp	mailbox was damaged needs to be repaired .Repaired.	Street	Y	bkb		

2/9/2021	4:13 PM		3454 Ridge Road		Recycle not picked up	kw	texted Eric		y	kw		
	12:00 AM		2716 Duluth		Garbage not picked up	kw	texted Dave		y	kw		
2/10/2021	8:33 AM		9403 Ellen Drive		Recycle not picked up	lp	texted dave. Many on the block were missed as well		y	lp		
2/10/2021	10:19 AM		3341 Duluth Street		Other: See Notes	lp	across the street there is a fire hydrant looks like the valve in front of it the cover is missing, just wanted to call and let us know.	wt/sw				
2/11/2021	8:23 AM	Thrift Center	Highway North Side of Alley		Other: See Notes	lp	thrift store has a lot of ice and snow build up in the alley behind their building, was wondering if a plow can come through there.Plowed and salted by Crew #2 as usual.	Street	y	bkb		
2/11/2021	1:23 PM		2312 Ridge Road		Garbage Can Replacement	lp	wheel is missing, texted dave		y	lp		
2/12/2021	3:48 PM		8110 5th Street		Other: See Notes	lp	said alley needs to be plowed resident got stuck back there	Street				
2/16/2021	8:06 AM	Jack Rose	9247 Kennedy Ave		Mailbox damaged	lp	mailbox was damaged Given to dennis	Street				
2/16/2021	8:50 AM	Nancy Kraus	2036 Northwood Lane		Mailbox damaged	lp	mailbox was damaged and she said a few others on the block as well Given to dennis	Street				
2/16/2021	8:52 AM		9214 Parkway Drive		Garbage Can Replacement	lp	garbage can is damaged. Texted dave		y	lp		
2/16/2021	12:00 AM		3904 Wirth Road		Mailbox damaged	lp	mailbox hit by plow Given to dennis	Street	y	lp		
2/16/2021	9:50 AM	Jackie	8201 Grace Street	(312) 907-3774	Other: See Notes	lp	grace and maple lives on the t wants them to stop plowing it into yard and wants them to stop because she can't even park in front of her house. Wants it evenly disperced. Wants Mark to call her. Talked to driver to not put snow there	Mark	y	mk	2/17/21	2:30pm
2/16/2021	9:54 AM	Melissa	3018 100th Street		Garbage Can Replacement	lp	garbage can is damaged. Texted dave		y			
2/16/2021	9:58 AM	Scott Lindberg	2019 White Oak Lane	(708) 642-1325	Mailbox damaged	lp	mailbox is damaged Given to dennis, needs wood based of mailbox eplaces	Street				
2/16/2021	10:36 AM	Holly	8810 5th Street	(219) 677-0238	Other: See Notes	lp	pipes are ,aking loud screeching noise on both sides of the meter. Had a plumber out said it might be the screens are blocked from the meter. Wants to know if we can take a look at it whenever we have time	wt/sw	y	tg		
2/16/2021	10:53 AM	Edward	2618 41st Place	(219) 448-8500	Other: See Notes	lp	getting all the snow thrown into the driveway. And wants to know why it is getting put into the driveway instead of across the way and into the empty lot.	Street				
2/16/2021	10:57 AM		2121 Azalea Drive		Mailbox damaged	lp	mailbox damaged. Given to dennis	Street	y	lp		
2/16/2021	11:02 AM		8330 Liable Road		Other: See Notes	lp	complaining street has not been plowed yet	Street				
2/16/2021	11:11 AM		3006 Lakeside Drive		Mailbox damaged	lp	mailbox knocked down Given to dennis, nailed mb back in	Street	y	lp		
2/16/2021	11:35 AM		10029 Erie Place		Garbage Can Replacement	lp	garbage can is damaged. Texted dave		y	lp		
2/16/2021	12:15 PM		10108 4th Place		Garbage Can Replacement	lp	garbage can is damaged. Texted dave		y	lp		
2/16/2021	1:37 PM		2918 100th Street		Garbage Can Replacement	lp	garbage can is damaged. Texted dave		y	lp		
2/16/2021	3:08 PM		2904 Garfield Ave		Other: See Notes	lp	resident is complaining that all the snow is putting all the snow in front of the house so they can't get out. Said they can't get the elderly lady out of the house if the plow keeps throwing snow there.	Street				
2/17/2021	8:01 AM		3125 Lincoln Street		Other: See Notes	lp	wants to know if the snow can be pushed a little more. Resident has to go get the second round of the covid vaccine tomorrow and they have been having difficulty getting out of the driveway being at the end of the cul de sac	Street				
2/17/2021	8:03 AM		Ridgewood and 41		Other: See Notes	lp	snow is piled up real high on north end of blue top and people can not see traffic on 41 without pulling into 41. needs that snow broken down to see traffic	Street				
2/17/2021	10:48 AM		2049 White Oak Lane		Mailbox damaged	lp	mailbox is damaged, gave to dennis	Street				
2/17/2021	11:24 AM		9046 Hess Drive		Other: See Notes	lp	wants to know if plox can come back down street	Street				
2/17/2021	12:23 PM		81st street		Other: See Notes	lp	81st Street is really bad at the west end before you turn onto indy	Street				
2/17/2021	12:50 PM		3442 Franklin Street		Other: See Notes	lp	resident has to park on the parkway due to no driveway. Wants to know if we can clear the street in front of her house. Said it is a few feet high. Would do it herself but she just broke her wrist and is hving a hard time getting through the street. Wants to know if we can clear that to the curb.	Street				
2/17/2021	12:54 PM		alley off of kennedy		Other: See Notes	lp	alley between 39th and martha needs alley cleared	Street				
2/17/2021	1:23 PM	Helen	9648 Liable Road	(219) 924-4709	Other: See Notes	lp	house north on liable is having snow plowed from driveway and pushing it into street pile but when the plow comes it will all be pushed into her driveway. Was wondering if we can go around that pile to avoid it being pushed all into her drive. Talked to code enforcement and police think it is not that bad since it is not middle in the road but doesnt want it all pushed into her drive. just had surgery and not supposed to be shoveling and wants it to go around it.	Street				
2/17/2021	1:57 PM				Other: See Notes	lp	resdient called in anonymously wanting to thank us for all of their hard work. Said john put before in the gazebo a piece of where to properly place snow when removing it, instead of throwing it on neighbors cars or in the street was wondering if we can add that to the next gazebo. NO	Mark				
2/17/2021	2:44 PM		10244 Birchwood Circle		Other: See Notes	lp	two neighbors next to him mailboxes are covered and mailman cannot get to them. It is a cul de sac. Two mailboxes at the end of the block where it circles. Gave to dennis	Street				
2/17/2021	2:48 PM		3730 Sandalwood Drive		Other: See Notes	lp	mailman cannot get to the mailbox gave to dennis	Street				
2/17/2021	3:34 PM		9328 Cline Ave		Mailbox damaged	lp	mailbox damaged Given to dennis, post cracked needs to be replaced	Street				
2/18/2021	8:45 AM	Donna	2043 White Oak Lane		Mailbox damaged	lp	mailbox damaged Given to dennis, broken from post	Street				
2/18/2021	8:53 AM		2621 Highway Ave		Other: See Notes	lp	owns a business on highway, parking spots on highway are still filled with snow was wondering if a plow was going to come through.	Street				
2/18/2021	9:45 AM	Pickens	2933 Franklin Street	(219) 923-1126	Other: See Notes	lp	wants to know if we can go curb to curb because they are having a hard time getting down the block	Street				
2/18/2021	10:13 AM		Eastbound Main at Kennedy		Traffic Light Out	lp	at the intersection of main and kennedy, right hand turn light heading east bound main out. Called midwestern per mark	Street	y	lp	2/18/21	11:15 AM
2/18/2021	2:25 PM		Corner of kennedy and Garfield		Other: See Notes	lp	cannot see turning onto kennedy from garfield. They cannot see when pulling out. Whoever has that lot piled it up too high	Street				
2/19/2021	7:51 AM	Nick	2237 99th Street	(219) 241-4957	Mailbox damaged	lp	mailbox was damaged by plow on Tuesday. Gave to dennis to look at	Street				
2/19/2021	7:52 AM	Sam	2727 Ross Street		Other: See Notes	lp	left voicemail wondering when the plows would be through. They were told they had to move their cars for the plow to come back through and that has yet to happen, was wondering if someone can go over there so they can not have to park at a different location	Street				
2/19/2021	8:38 AM		3720 Sandalwood Drive		Other: See Notes	lp	mailbox is blocked in mail lady cannot get to it.	Street				
2/19/2021	9:28 AM		3500 Block of 41st Place		Other: See Notes	lp	resident said neighbor that left car in the street during the snow just left was wondering if a plow can come through. Hard for people to see pile at night and can't move over so there have almost been a few accidents	Street				
2/19/2021	10:34 AM		3120 Highway Ave		Other: See Notes	lp	hard to turn right into the alley because of the big mound on the corners	Street				
2/19/2021	11:56 AM		2705 41st Place		Garbage Can Replacement	lp	garbage can lid is damaged and cracked needs can replaced. Messaged eric		y	lp	2/19/21	
2/19/2021	12:04 PM		Ross & Gordon		Other: See Notes	lp	build up by the corner of the alley is so wide can't get cars in and out of the alley to people to be off the street and into the garages	Street				
2/19/2021	12:34 PM		2604 45th Street		Mailbox damaged	lp	mailbox was damaged. Gave to dennis	Street				
2/19/2021	12:55 PM		2114 Strong Street		Other: See Notes	lp	neighbors parked in front of his house, wants to know if we can run a plow through there to clear up the street	Street				
2/23/2021	7:56 AM	Highland PD	Kennedy Ave		Street Light Out	lp	Pd called said there are a few street lights out on kennedy ave between 41st Street and Martha. Didn't know what side or how many are out. Already been sent to Midwestern Electric.	Street	y	bkb		
2/23/2021	8:15 AM	Andrea Bernard	2623 Parkway Drive	(708) 964-8070	Other: See Notes	lp	resident left a voicemail stating she thinks her vehicle was hit by a plow Sunday night. Called her back and told her that she needs to file a police report.		y	lp		
2/23/2021	9:13 AM	Ashley	9328 Spring Street	(219) 808-5570	Mailbox damaged	lp	mailbox was hit with a plow. Duplex so one post has two boxes.Gave to Dennis.	Street	y	bkb		
2/23/2021	9:43 AM		9328 Cline Ave		Mailbox damaged	lp	mailbox damaged. Mailbox was left on the snowbank next to post ..Gave to Dennis.	Street	y	bkb		
2/24/2021	7:54 AM		2600 Wicker		Garbage not picked up	lp	garbage was missed on whole block for 2nd week in a row. Messaged dave		y	lp		
2/24/2021	8:31 AM		10017 Wildwood Lane		Mailbox damaged	lp	mailbox was damaged by plow resident just got back from vacation gave to dennis	Street	y	lp		
2/24/2021	8:51 AM		9931 Branton Street		Mailbox damaged	lp	mailbox was damaged, and possible next door neighbor gave to dennis	Street	y	lp		
2/24/2021	8:54 AM		2610 Jewett Ave		Garbage not picked up	lp	garbage was missed for 2nd week in a row messaged dave		y	lp		
2/25/2021	9:14 AM		3341 Maple Drive		Water Break	lp	possible water break. Resident said he can see water coming up in his neighbors back year. The neighbors house is on grace street at the nw corner of grace and maple. Gave to tim	wt/sw				
2/26/2021	1:45 PM	George Rogers	8501 Kennedy Ave	(219) 898-0267	Locate Lines/B-box	lp	needs buffalo locatted and checked to see if it is working has tiger coming out Monday to fix a valve. Southside of building next to the staircase. Marked bright blue. Matt is heading over there to check it for him	wt/sw				
3/1/2021	8:59 AM	Magaret Joyce	9931 Branton Ave		Mailbox damaged	lp	duplex both mailboxes were taken down. Box was put by her front stoop behind the every green..Gave to Dennis and Jeff	Street	y	bkb		
3/1/2021	9:17 AM	Heather	2036 44th St	(219) 671-3626	Mailbox damaged	kw	mailbox damaged..Gave to Dennis and Jeff.	Street	y	bkb		
3/1/2021	9:49 AM		5th and 100th		Sign down/damaged	lp	damaged street sign by our plow (mark called it in)..Already on my list.	Street	y	bkb		
3/1/2021	1:45 PM		9010 Grace Street		Other: See Notes	lp	hydrant was cleared and seems that some sort of pipe near it was cracked,is not leaking water or anything but just wanted to let us know in case it is an issue later repaired	wt/sw	y	ak	3/10/21	1:56 PM

3/2/2021	9:09 AM		2620 Jewett Ave		Garbage Can Replacement	lp	resident needs both garbage and recycling bins swapped out. Messaged dave		y	lp		
3/2/2021	2:26 PM		8023 Richard Street		Other: See Notes	lp	broken glass in street .Pete took care of it.	Street	y	bkb		
3/4/2021	9:42 AM		9526 Wildwood Drive	(219) 577-6588	Mailbox damaged	lp	mailbox taken out by plow. Resident is going to set mailbox out. Gave to jeff	Street	y	bkb		
3/4/2021	12:15 PM	Nathan Curtis	3537 44th Pl	(219) 313-9289	Sink Hole	kw	sinkhole in parkway Repaired 3/16/2021	wt/sw	Y	AK	3/10/21	2:19 PM
3/5/2021	9:16 AM		Garfield and Liable		Other: See Notes	lp	a lot of trash on the corner of Garfield and Liable wants to know if we can clean it up ..Gave to Grant and Luke.	Street	y	bkb		
3/5/2021	11:22 AM		2037 Birchwood Lane		Mailbox damaged	lp	Fixed.	Street	y	bkb		
3/8/2021	9:14 AM	Jessica Browning	8002 Sycamore Ave	(574) 217-5693	Locate Lines/B-box	lp	needs water located and then turned off on Friday. House is vacant so can be shut off anytime on Friday and will be off over the course of the weekend. Will call on Monday when someone is at residence to have water turned back on Paul checked, thinks water may be off already, need someone there to check for sure. Will call them Friday morning.	wt/sw	y	ak	3/10/21	2:17 PM
3/8/2021	9:24 AM		10017 Wildwood Lane		Mailbox damaged	lp	mailbox has not been repaired yet was calling to remind us it was damaged.Fixed,	Street	y	bkb		
3/8/2021	10:39 AM	Joe Gerba	2448 Ridgewood St	219-838-9980	Locate Lines/B-box	kw	Having work done on Wednesday - Tiger Plumbing asking to have the b-box located and make sure it is functioning. Matt checked, works fine	wt/sw	y	ak	3/10/21	1:14 PM
3/8/2021	12:41 PM		2541 Hart Road		Leaves Pickup	lp	has a bag of leaves that need picked up. Gave to jeff	Street	y	lp		
3/9/2021	9:23 AM		park drive behind pd		Other: See Notes	lp	looks like a sewer cover is off. It is behind the pd on park drive. Kyle and Trey repaired 3/10/2021	wt/sw	y	ak	3/10/21	2:20 PM
3/9/2021	9:54 AM	Karen Walski	2023 Briarwood Ln		Other: See Notes	kw	Complaining about recyclables being dumped in the street and left for the residents to be picked up. Sent a text to Dave		y	kw	3/9/21	9:56 AM
3/9/2021	11:37 AM		3034 Glenwood		Garbage not picked up	kw	had her recycle tote marked as trash and it wasn't picked up. Sent a text to Dave		y	kw	3/9/21	11:37 AM
3/9/2021	2:09 PM	Jim Moss	2117 Azalea Dr	(219) 924-0285	Mailbox damaged	kw	damaged mailbox from plow Gave to Siple :)	Street	y	lp		
3/9/2021	3:08 PM	Jason	9221 Idlewild Drive	(219) 713-7375	Locate Lines/B-box	lp	needs bbox located and will call back when he needs it shut off Paul located and talked to resident	wt/sw	y	ak	3/10/21	1:11 PM
3/10/2021	10:14 AM		9414 Spring Street		Other: See Notes	lp	there is a branch by the ditch hanging over into their yard looks like it is going to fall	Street				
3/10/2021	1:50 PM	Paul Sostaric	9401 Farmer Drive	(219) 922-8869	Locate Lines/B-box	lp	needs bbox located having work done in his backyard Cannot locate, might need b-box installed	wt/sw	y	ak	3/16/21	9:06 AM
3/10/2021	2:45 PM		3232 43rd Street		pot hole	lp	pot hole in street it was fixed last year but is getting bad again..Gave to Tim & Kevin	Street	y	bkb		
3/11/2021	11:03 AM	Troy Nagel	3213 O'Day Drive	(708) 870-1230	Dead Tree/Status?	lp	possible dead tree in the parkway. Wants to be looked at. Has been dropping large branches and has a few holes in them.	Tim	y	tg		
3/11/2021	12:10 PM		8429 Parrish Ave		Other: See Notes	kw	new resident needs new cans, sent text to Dave		y	kw		
3/11/2021	2:01 PM		3721 42nd Place		pot hole	lp	pot hole in the street...Gave to Brenden.	Street	y	bkb		
3/11/2021	2:19 PM	Ryan Miller	3207 Eder Street	219-718-7247	Locate Lines/B-box	lp	needs bbox located, please call before going in back yard has a large dog that is not friendly. Sent Paul over	wt/sw	y	ak	3/16/2021	3:15 PM
3/12/2021	10:08 AM	Police Dept	2nd and Clough		Sink Hole	lp	pd called said there is a sink hole in the roadway at 2nd and clough Dan checked, no sewers under that area	wt/sw	y	ak	3/16/21	9:05 AM
3/15/2021	10:26 AM	Caitlin Jameyfield	8729 Woodward Ave	(219) 381-9063	Drainage Issues	lp	is having back up into the basement drain wants to have the line checked out resident will be available after 12:30pm - 2pm if someone can look then. 219-985-4109 Brendan is the husband. Aaron spoke with resident	wt/sw	y	lp		
3/15/2021	10:49 AM	Antonio Gonzalez	9625 5th Place	(815) 600-6873	Other: See Notes	lp	resident just moved into a house in highland the tree in the parkway is uprooting his sidewalk, wants to know if anything can be done with the tree, if the town assists with that or if it is something he has to take care of.	Tim	y	tg		
3/16/2021	9:09 AM		3613 45th Street		Garbage Can Replacement	lp	has a cracked can, needs can swapped out. Messaged dave		y	lp		
3/16/2021	10:28 AM		2312 Ridge Road		Garbage Can Replacement	lp	missing wheel message dave		y	lp		
3/16/2021	11:31 AM	Julia Harmening	3149 Highway Ave	(219) 838-6718	Dead Tree/Status?	kw	Resident believes the tree is dead and would like it removed. Please check status Street Dept to remove	Tim	y	mk		
3/17/2021	11:56 AM		10024 Erie Pl		Other: See Notes	kw	Residents neighbor had a water main break before the snow and the dirt/mud ended up in this guys yard and driveway. He has cleaned it off his yard into the street and wants to know if we can bring some shovels and clear it off the street Lou Swept it up	wt/sw	y	ak	3/17/21	2:12 PM
3/17/2021	1:10 PM	Barbara Harrison	2043 Cedar Circle	(219) 972-0705	Other: See Notes	kw	Wanting to know if the hydrants - White Oak Estates (stand alone homes behind Meijer) are on the schedule to be repainted? Yes, if they need it	wt/sw	y	AK	3/17/21	2:35 PM
3/19/2021	7:56 AM	Christ	3747 44th Street	(219) 688-9569	Dead Tree/Status?	lp	resident said the tree in her parkway on manor drive is dropping big branches, thinks it might be dead	Tim	y	tg		
3/19/2021	7:57 AM		3747 44th Street		Tree/Branch Issues	lp	had a big branch off parkway tree fall into road, too big for her to move wants to know if we can get it. The branch is on manor drive .We will get it today.	Street	y	bkb		
3/22/2021	9:29 AM	Donna McGowan	9414 Spring Street	(219) 308-2820	Tree/Branch Issues	lp	there is a branch by the ditch hanging over into their yard looks like it is going to fall..Called County.	Street	y	bkb		
3/22/2021	9:45 AM	Linda/ Steve	9027 Richard Street	(219) 865-6175	Drainage Issues	lp	rental property having water coming up in basement had plumber out needed to know if it was something on our end or theirs. Jimmy checked, water issue not sewer issue 9025 Richard Street	wt/sw	Y	ak	3/22/21	11:31 AM
3/22/2021	12:51 PM	Frank Mrvan	8722 Idlewild Ave		Leaves Pickup	lp	Gave to Dennis	Street	y	bkb		
3/22/2021	3:06 PM		3144 Highway Ave		Leaves Pickup	lp	has bagged leaves that need to be picked up. ..Gave to Dennis	Street	y	bkb		
3/23/2021	9:06 AM		3322 Franklin Street		Leaves Pickup	lp	has bagged leaves that need to be picked up. Gave to Dennis	Street	y	bkb		
3/23/2021	11:08 AM		8340 4th Street		Garbage Can Replacement	lp	resident called back in december for both garbage and recycling cans swapped out due to damaged cans they have yet to receive them. Messaged eric		y	lp		
3/23/2021	1:04 PM		9341 Forest Drive		Garbage Can Replacement	lp	resident needs a damaged garbage can swapped out with a new one. Messaged eric		y	lp		
3/23/2021	1:24 PM		3649 42d Street		Recycle not picked up	lp	whole block was missed for recycling. Messaged eric		y	lp		
3/23/2021	1:30 PM	Linda	2804 42nd Street	(219) 789-1833	Recycle not picked up	lp	recycling was missed Messaged eric		y	lp		
3/24/2021	8:31 AM		3138 Grand Blvd		Garbage not picked up	lp	garbage was missed messaged eric		y	lp		
3/24/2021	9:00 AM		2822 Franklim Street		Garbage not picked up	lp	garbage was missed in the alley of the 2800 block of franklin street. Messaged eric		y	lp		
3/24/2021	9:14 AM		9234 Highland Place		Garbage not picked up	lp	garbage was missed messaged eric		y	lp		
3/24/2021	9:17 AM		Erie Street		Dead Animal	lp	dead possum on erie street between lincoln and 38th .Dennis will get it.	Street	y	bkb		
3/24/2021	9:35 AM		9234 Cottage Grove Ave		Recycle not picked up	lp	whole block was missed for recycle messaged eric		y	lp		
3/24/2021	9:38 AM		3219 41st Street		Garbage not picked up	lp	all 3 houses have not been picked up messaged eric		y	lp		
3/24/2021	10:59 AM		10016 Kennedy Ave		Dead Animal	lp	dead animal in the street..Dennis is on it.	Street	y	bkb		
3/24/2021	1:18 PM		2933 Churchill Lane		Sink Hole	lp	possible sink hole in front of their house in front of the sewer Sent Dan to check Not a sewer issue	wt/sw	Y	AK	3/26/21	8:23 AM
3/24/2021	3:15 PM		8035 Sycamore Ave		Garbage Can Replacement	lp	resdient has damaged cans needs both garbage and recyling replaced messaged eric		y	lp		
3/25/2021	10:41 AM		9636 Liable Road		Tree/Branch Issues	lp	branch hanging into road way..Taken care by Chris	Street	y	bkb		
3/26/2021	9:38 AM	Linda Wilson	2534 Martha Street	(219) 922-2885	Restorations	lp	parkway was tore up due to plow along with the house next door (its vacant)...On the list	Street	y	bkb		
3/26/2021	12:36 PM	Russel	9301 Southmoor	(219) 895-9255	Locate Lines/B-box	lp	needs bbox locatted to have water shut off for a future date. Gave to Trey	wt/sw	y	AK	3/26/21	1:22 PM
3/29/2021	8:07 AM		8220 Wicker Park Drive	(708) 670-3605	Water On/Off Req.	lp	resident needs water shut off to put in a new faucet. Called paul he is going to go over there to take a look at it.	wt/sw				
3/29/2021	10:27 AM	Elias	9904 Southmoor Ave	(219) 801-0008	Restorations	lp	had yard torn up by plow. Sprinkler at the end of parkway was damaged. He came in once before and nothing has been repaired yet, was wondering when that repair will happen. On the list and they are working on that list today.	Street	y	bkb		
3/29/2021	11:29 AM		3051 45th St		Other: See Notes	kw	There has been a cone there for a long time that originated in the street and is now in the parkway. Do we know who this belongs to and they are asking if it can be removed. They are afraid it is going to blow into someone's vehicle..Dennis will get it.	Street	y	bkb		
3/29/2021	11:39 AM	Don Dykstra	Whispering Oaks Development	(219) 924-8461	Restorations	kw	HOA president requesting sod restorations for plow damage. Did not give any specific addresses.Numerous addresses are on the list, they are working on it as I type this in.	Street	y	bkb		
3/29/2021	12:02 PM		3421 Lincoln		Leaves Pickup	kw	Has 2 bags of leaves to be picked up, please and thank you..Dennis will get it.	Street	y	bkb		
3/29/2021	12:19 PM	John Lytle	2919 Condit	(219) 712-0242	Sewer Backup	kw	Check the main. Had a plumber out over the weekend has roots. This is possibly in the easement. Dan checked, main is clear	WT/SW	Y	AK	3/29/21	2:07 PM
3/29/2021	3:45 PM		Highway Ave		Other: See Notes	lp	one of the poles seems loose on the light pole in front of the thrift shop. Resdient said looks like the wind might take it down.We will take a look at it.	Street	y	bkb		
3/30/2021	8:59 AM		8031 Glenwood Street		Water Break	lp	possible water break, water bubbling up in neighbors yard behind her. Gave to aaron	wt/sw				
3/30/2021	9:03 AM		8839 Prairie Ave		Leaves Pickup	lp	resident has bagged leaves ..Dennis is all over it!	Street	y	bkb		
3/30/2021	9:21 AM		2312 Ridge Road		Garbage Can Replacement	lp	resident has a broken wheel needs garbage can swapped out. Messaged eric		y	lp		
3/30/2021	10:22 AM		2828 Laporte Street		Garbage Can Replacement	lp	needs recycle bin swapped out, has the small one needs the bigger on. Messaged eric		y	lp		
3/30/2021	10:23 AM		2828 Laporte Street		Leaves Pickup	lp	resident had bagged leaves that need to be picked up gave to dennis	Street	y	lp		
3/30/2021	11:15 AM		8515 Delaware Street		Leaves Pickup	lp	ne corner of franklin and delaware gave to dennis	Street	y	lp		
3/30/2021	11:19 AM	Robert	2715 North Drive	(219) 292-6568	Sewer Backup	lp	having water back up in house said a plumber came and said it is something on our end. Said sewer in front of house has a lot of stuff in it. Resident is on days this week and said if no answer when calling to leave him a message Jimmy checked, not our issue.	wt/sw	y	AK	3/30/21	3:01 PM
3/31/2021	9:22 AM	Laura	3634 Franklin Ave	(219) 865-2104	Restorations	lp	parkway was tore up from a plow..on the list.	Street	y	bkb		
3/31/2021	1:17 PM	PRESS 1 FOR SERVICE	2919 Condit Street	(219) 322-4906	Other: See Notes	lp	final inspection for sewer for Reichelt Plumber. Would need inspecton for Monday April 5th between 12:30pm-1pm	wt/sw				

3/31/2021	1:46 PM	Kim Urban	3134 Eder Street	(219) 670-4022	Dead Tree/Status?	lp	has a tree in the parkway that looks diseased has a liquid coming out of it on the side facing the house and it is killing the grass and the bottom of the tree. Tree is not dead, tree was topped and the grass is also not dead	Mark	y	mk	4/8/21	10:42 AM
3/31/2021	1:49 PM		3134 Eder Street		Garbage Can Replacement	lp	needs new garbage can, messaged eric		y	lp		
3/31/2021	2:36 PM	Susan	8146 Grace Street	(219) 682-8652	Restorations	lp	,kmxc jmkre	wt/sw	Y	AK	4/1/21	10:41 AM
3/31/2021	2:39 PM	Wiening	8217 Grace Place	(219) 838-3476	Restorations	lp	parkway was messed up from plows .added to list.	Street	y	bkb		
4/1/2021	8:08 AM		8618 Parrish		Other: See Notes	lp	resident has big chunks of concrete in front of their driveway, thinks there might be a big pot hole nearby, wants us to take a look at it.Small pieces of asphalt peeples, not concrete,Lou will sweep later today.	Street	y	bkb		
4/1/2021	8:51 AM		lincoln street and 1st		Dead Animal	lp	dead animal on lincoln just west of the stop sign. Dennis already picked up	Street	y	lp		
4/1/2021	12:12 PM	Sylvia Danahey	9930 Wildwood Circle	(219) 808-7311	water pressure	kw	Is requesting the water pressure to be tested. Please call Paul and Matt is going to check, pressure was fine	wt/sw	Y	Ak	4/1/21	2:07 PM
4/1/2021	2:20 PM	Jeri Regnier	3530 Wirth Rd	(219) 742-2149	Mailbox damaged	kw	Mother's mailbox was damaged by plow. Resident is older so daughter left her info Please check and advise..Gave to Jeff to Check	Street	y	bkb		
4/5/2021	8:39 AM	Reichelt Plumbing	2919 Condit Street	(219) 322-4906	Other: See Notes	kw	They are doing a dig and hit a 2" water line, they need the water off to do a repair Clamped and done	wt/sw	y	ak	4/5/21	10:31 AM
4/5/2021	9:17 AM		2725 Garfield		Garbage Can Replacement	kw	Sent a text to Dave		y	kw	4/5/21	9:18 AM
4/5/2021	10:07 AM		Hart Rd West of Kennedy		Other: See Notes	kw	Manhole is down approx. 2" and is causing a lot of noise :) Jimmy is chekcing it	wt/sw	Y	AK	4/5/21	10:34 AM
4/5/2021	10:59 AM		2916 Condit		Garbage Can Replacement	kw	needs new can, sent a text to Dave		y	kw	4/5/21	11:00 AM
4/5/2021	12:06 PM		2715 North Drive		Garbage Can Replacement	kw	texted Dave		y	kw	4/5/21	12:06 PM
4/5/2021	12:15 PM	Debbie	3739 Wirth Rd	(219) 902-1288	Sink Hole	kw	West side of house in easement there is a storm drain with a sinkhole next to it Please and check and fill Dan checked, erosion from sump pump, Bob filled with dirt	wt/sw	Y	AK	4/5/21	2:11 PM
4/5/2021	4:04 PM		8136 Sycamore		Garbage Can Replacement	kw	both recycle and garbage need replaced. Sent a text to Dave		y	kw	4/5/21	4:05 PM
4/5/2021	4:38 PM		9003 Highland St		Sink Hole	kw	sink hole forming, please check Dan checked, not a sewer issue.	wt/sw	y	AK	4/6/21	10:09 AM
4/6/2021	10:30 AM	Michael's Store/Gary	10323 Indianpolis Blvd	(219) 395-6940	Valve Issues	kw	needs service shutoff 8am - 4/7/21 to replace a valve. Off for approx. an hour Matt will take care of it.	wt/sw	Y	AK	4/6/21	1:19 PM
4/6/2021	11:36 AM	Mindy Pierce	10030 Erie Pl	(219) 359-6355	Restorations	kw	Had water break over the winter and is trying to sell her home and wants to know when the restorations will be done. Bright orange fence still there and sidewalk needs replace. Please call her and give an estimated timeframe. Aaron tried to call but could not leave a voicemail, box is full. Roughly 2 to 3 weeks before restorations will begin	wt/sw	y	ak	4/6/21	1:23 PM
4/7/2021	1:05 PM	Frank Scarbine	2730 Martha St	(219) 308-0363	Locate Lines/B-box	kw	bbox is located front of house/right side sticking up approx. 6 inches. Resident is requesting it to be lowered so know one hits it. Will get it done Friday	wt/sw	Y	AK	4/7/21	1:18 PM
4/7/2021	1:22 PM	Betsaida Fernandes	8420 Parrish Pl	(219) 712-6678	Tree/Branch Issues	kw	tree is full of termites, resident wants someone to look at it please and thank you Dead on the list 4/8/21	Mark	Y	Mk	4/8/21	10:42 AM
4/7/2021	1:28 PM		9004 Wildwood Dr		Other: See Notes	kw	sewer drain at end of driveway has a nest of racoons, at least 2 large ones Dan and Steve to the rescue!!	wt/sw	Y	AK	4/7/21	1:37 PM
4/7/2021	3:48 PM	Fran	3120 Highway Ave	(219) 616-1956	Other: See Notes	kw	Says the plows tore up the asphalt in the alley behind the garage. Wants to know if we will fix it..I will take a look at it.	Street	y	bkb		
4/9/2021	1pm		8128 Gordon Dr		Recycle not picked up	bkb	Missed the last 2 weeks					
4/9/2021	1:55pm		3307 North Dr		Pot Hole	bkb	Gave to Pete	Street	y	bkb		
4/9/2021	3:05PM	Damally Malaves	9842 Erie St	219-292-9542	Sidewalk/Curb Issue		Wants to know more info about the sidewalk replacmemnt program for sidewalk infront of the house..Talked to her.	Street	y	bkb		
4/12/2021	9:48 AM	Teresa Mikos	8403 Delaware St	(312) 816-9177	Sink Hole	kw	Has a sink hole in the parkway close to the driveway started last summer please check and advise resident.Gave to Matt to check.	wt/sw	y	bkb		
4/12/2021	11:06 AM		2922 Churchill Ln		Other: See Notes	kw	Lightpole #8 is blinking off and on/same as it did a couple years ago. There is also a tree branch that is blocking the light.Jeff cut branch away from sensor and resident will monitor.	Street	y	bkb		
4/12/2021	11:18 AM		3625 Highway		Branches Missed	kw	resident hasn't seen the chipper truck yet and today is his area :)...Wow! Is all I can say about this one.	Street	y	bkb		
4/12/2021	2:47 PM	Tim Sipis	3339 Wirth Rd	(219) 781-5329	Restorations	kw	had sewer and water work done last fall and wants to know when the restorations will be done/this might be the Grace St project, also contacting Derek. Called resident back after talking to Derek. Grimmer is purchasing sod at the end of the month and will begin the restorations.	wt/sw	y	kw	4/12/21	2:55 PM
4/13/2021	8:30 AM	Elsa Fabian	10102 4th St	(219) 512-0445	Sewer Backup	kw	had sanitary backup in the basement TLC rodded the line and said there were a lot of tree roots and he believed he was out to the main, please check. Also standing water in back easement everytime it rains (neighbor to north)..Gave to Jimmy/Joe to check out.	wt/sw	y	bkb		
4/13/2021	11:25 AM	Stacie	2214 Oakdale St	(219) 742-3869	Dead Tree/Status?	kw	feels the tree in the front easement is dying. Please check and advise Mark checked it, not dead, inventory advises needs pruned. Informed resident	Mark	y	kw	4/13/21	1:52 PM
4/13/2021	12:15 PM		7908 North Dr		Branches Missed	kw	resident hasn't seen the chipper truck yet and today is his area :)..This was yesterdays route.	Street	y	bkb		
4/14/2021	9:50 AM	Church of Nazarene	9330 Kennedy Ave	(219) 924-4843	Other: See Notes	kw	Has branches by parking lot (where they always put them) Please chip when in that area.Will get Thursday	Street	y	bkb		
4/14/2021	10:00 AM	Riechelt Plumbing	2658 Grand Blvd	(219) 322-4906	Other: See Notes	kw	Needs an inspection 4/15/21 at 10am for an exterior cleanout	wt/sw				
4/14/2021	10:13 AM		2000 Azalea		Branches Missed	kw	branches out since last Wednesday, not picked up. Will get on Thursday	Street	y	bkb		
4/14/2021	11:53 AM	Kelly Hamilton	8340 4th Street	(219) 218-8382	Other: See Notes	kw	sink hole around bbox, side yard in back just inside of the gate (that is currently missing) trey is looking at it,ground sunk around b box from previous work, will add to the restoration list.	wt/sw	y	bkb		
4/14/2021	2:09 PM	Kelly Hamilton	8340 4th Street	(219) 218-8382	Dead Tree/Status?	kw	tree is dead and a hazard Needs removed, adding to list 4/14/21	Mark	y	kw	4/14/21	3:22 PM
4/14/2021	3:00 PM		3509 Ross Pl		Sidewalk/Curb Issue	kw	Neighbor at 3501 is in a wheel chair and said the sidewalk in front of this property is a hazard, lifted by tree roots approx. 4 inches.	Street				
4/15/2021	3:27 PM	Mike Lenaburg	9542 Manor Dr	(219) 746-5310	Dead Tree/Status?	kw	2 trees on back side of house on liable in the easement. Check status and advise 1 Tree is dead NIPSCO will remove 4/19/21 Resident informed 4/22/21	Mark	y	mk	4/16/21	2:00pm
4/16/2021	3:27 PM		3223 Garfield		Locate Lines/B-box	kw	Resident called stating he had water coming into the basement and needed the water off at the bbox. The valve inside was not stopping the water from coming in. Gave to Trey. Trey advised resident has a leak somewhere between the bbox and the meter. He shut the water off at the bbox so the resident could get it repaired.	wt/sw	y	kw	4/16/21	8:46 AM
4/16/2021	9:22 AM	Johnny Lozano	8121 Duluth	(219) 614-1408	Sewer Backup	kw	Resident had backup last night and has roto rooter coming out. Please check the main Jimmy/Joe will check it out.	wt/sw	y	bkb		
4/16/2021	11:13 AM	Sean Maloney	9150 Cottage Grove Pl	(219) 512-2420	Other: See Notes	kw	Camera the storm sewer line at this address and see if there is an existing tap and mark. Resident is having driveway replaced and wants to tie into the storm line in the front Found and marked	wt/sw	Y	AK	4/20/21	12:38 PM
4/20/2021	11:13 AM	Tracy Wilcoz	8411 Delaware Pl	(219) 484-7396	Other: See Notes	kw	Had sidewalk and driveway apron done last year and the parkway is now very lumpy. Resident is asking if we can roll it.Next time we do concrete restorations we will add that to the list. Informed resident it will be 1-2 weeks	Street	y	bkb		
4/21/2021	1:22 PM	Roger	8836 Parrish Ave	(219) 880-6333	Locate Lines/B-box	kw	Please locate bbox, resident will call Friday to have water shut off to replace inside valve Matt will locate 4/21 Matt turned the water off then back on after repair 4/22/21	wt/sw	Y	AK	4/21/21	2:18 PM
4/21/2021	1:30 PM	Frank	9129 Woodward Ave	(773) 316-8443	pot hole	kw	lots of potholes in front of this residence..Dennis and Pete will take care of them.	Street	y	bkb		
4/22/2021	10:27 AM	Matt Osteroski	3432 Grand Blvd	(219) 923-1142	Drainage Issues	kw	Resident had TLC out this morning who ran a camera through the service line. TLC advised resident there is a root ball at the tap that they believe goes into the main. TLC told resident the video would be available tomorrow and I asked resident to give them authorization to share that video with us. Can we check our end? Roots are coming out of residents service, will have Jimmy root cut on 4/23 and retelevise to see if they pull out. Gave picture to resident and will talk again after cutting. Roots in service, advised resident on furher action.	wt/sw	Y	AK	1/0/00	2:00 PM
4/22/2021	11:05 AM	Chester Balzer	8907 Southmoor	(219) 689-1284	Sink Hole	kw	Storm sewer at the corner of this residence is cracked and sinking, causing curb to lift and crack. There is also rebar sticking up. Please check and let resident know if this can be taken care of. Dan looked and said it is just an old conrete problem, will have it double checked tommorrow and talk to resident.	wt/sw	Y	AK	4/22/21	12:09 PM
4/22/2021	1:08 PM	American Legend Post	2703 Jewett St	(219) 972-3948	Street Light Out	kw	first street light by the building by flower plantar right in front of the pavillion. These are not our poles,Talked to Mike and he said he would contact Dan Dan the Nipsco Man.	Street	y	bkb		
4/22/2021	1:21 PM	James Wyatt	3330 Eder	(219) 802-3646	Restorations	kw	wants to know when restorations will be complete, water main break last year (back yard by telephone pole) Called and left message, told him sometime within the next few weeks, weather permitting.	wt/sw	Y	AK	4/22/21	1:58 PM
4/22/2021	3:28 PM		3418 Laverne Dr		Other: See Notes	kw	Matt had to change the head only on this meter today because the inside and outside valves were not working. Please place on the list to fix the bbox when time permits. It took several months to get in this home Done	wt/sw	Y	AK	4/23/21	8:17 AM
4/26/2021	8:45 AM	CVS Pharmacy/Sheila	3835 45th St	(847) 372-2454	Sewer Backup	kw	manhole on west side of the parking lot was backing up yesterday, check main Clean water came up on the inside but outside was waste water Please call Sheila back with findings. Trey found blockage at the service line and also blockage to the east (upstream) The crap was sucked up then the line jetted, now has good flow. Called they will jet it when the truck is available. Called they will jet it when the truck is available.Called Sheila to inform her of the findings, she would like another call after the line is jetted. The crap was sucked up then the line jetted, now has good flow. Left voicemail for Sheila Jimmy also noted a lot of grease in this line??	wt/sw	y	kw	4/26/21	10:45 AM
4/26/2021	4:16 PM		2711 Wicker		Leaves Pickup	kw	has bagged leaves for pickup	Street				
4/27/2021	10:00 AM	Nathanial Nunez	8426 Liable	219-292-9081	Other: See Notes	SM	Garbage truck knocked down cable line, Republic was contacted					
4/27/2021	10:01 AM	Elijah Roman	8143 E. 4th Place	219-323-4784	Garbage not picked up	SM	Garbage not picked up, sent text to Dave		y	SM	4/27/21	10:18 AM

4/27/2021	10:20 AM	Paul Trzeciak	3038 97th Place	219-743-3038	Other: See Notes	SM	Paul wants a One-Way Sign or Do Not Enter Sign put up at the entrance to Lakeside off 45th Street. Cars are coming and going in the wrong lane . Brian spoke to Derek, this is one of the wavy roads. After the road is fixed the will install painted arrows on the asphalt. Called Paul	Mark				
4/27/2021	1:32 PM		2124 Martha		Pot Hole		in front of property eastbound..Jeff took care of it.	Street	y	bkb		
4/27/2021	1:32 PM		8944 Wildwood		Pot Hole		in the middle of the road..Jeff took care it.	Street	y	bkb		
4/27/2021	3:03 PM	John Bhatty	7940-7944 Spruce	(708) 212-0108	Other: See Notes	kw	nipsco cut a large limb last year in the easement and has not come back for it. Please contract Nipsco to get it removed Sent notification for removel .	Mark	y	mk	4/28/21	8:30am
4/28/2021	7:30 AM	Colleen Groves	3509 Ross Place	630-440-4805	Garbage Can Replacement	SM	recycling bin and garbage can has a big crack in it, resident would like both replaced					
4/28/2021	9:24 AM	Karina Belloso	9849 Terrace Ct.	219-713-5606	Garbage not picked up	SM	garbage was not picked up - I texted Dave at Republic to pick it up		y	SM	4/28/21	9:47 AM
4/28/2021	9:39 AM	Ed Bricker	3218 Strong	(219) 838-5875	Locate Lines/B-box	kw	Needs bbox located to repair inside valve, by Friday please Trey handled it	wt/sw	Y	AK	4/28/21	12:51 PM
4/29/2021	2:25 PM	Patrick Keown	9118 Spring Street		Garbage Can Replacement	SM	Garbarge truck damaged the garbage can. Patrick would like a new can					
4/30/2021	5:15 PM	Alan Hughes	3133 99th Street	618-301-8191	Other: See Notes	SM	Alan said his water is coming out a brownish color. He wants someone to come out and look at it Trey and I checked it out, Main line is fine, advised it was probably coming from his service line, changed meter.	WT/SW	Y	AK	4/30/21	9:08 AM
5/3/2021	7:34 AM		corner of Glenwood & Parrish		Dead Animal	sm	Dead raccoon at the corner of Glenwood and Parrish - texted Jeff Siple		Y	JS		
5/3/2021	8:54 AM	Kate Zisoff	9351 Forrest Drive	219-677-2244	Dead Tree/Status?	SM	Kate wants someone to come out and look at the tree in te easement to see if it can be cut down Left voicemail for resident and told her tree is not dead needs pruning	Tim	y	mk	5/11/21	1:50 PM
5/3/2021	3:08 PM	Town Hall	3333 Ridge Road	838-1080	Dead Animal	SM	10-45 on the bench near the handicap entrance - texted Jeff Siple		Y	JS		
5/3/2021	3:35 PM	Tom from Meyer	3741 Sandalwood	(219) 314-3362	Locate Lines/B-box	kw	please locate bbox, Meyer's Plumbing doing work on Wednesday - locate tomorrow please Located and raised 5/4	wt/sw	Y	AK	5/4/21	11:30 AM
5/4/2021	4:48 PM	Lawrence Barker	3508 Garfield	708-269-6470	Locate Lines/B-box	SM	please locate B-box, plumber doing work and needs to replace a valve Paul got it	WT/SW	Y	AK	5/5/21	3:07 PM
5/4/2021	9:30 AM	Keith Holem	2845 Condit Street	219-765-5752	Other: See Notes	SM	garbage truck knocked down Comcast line, 2nd time in 2 weeks Sent a text to Dave at Republic	Street	Y	SM	5/4/21	12:56 PM
5/4/2021	9:50 AM	Michelle Hutton	10030 Express Drive	219-864-9886	Other: See Notes	SM	Michelle said there are very large pot holes on Express Drive leading up to their business, she is afraid it is going to cause car damage..Small pot holes along some of the curb,will get them next time we are out cold patching.	Street		y	bkb	
5/4/2021	10:30 AM	Allison Boersma	9149 Woodward Ave	480-242-4031	Garbage not picked up	SM	garbage not picked up - texted Dave at Republic		Y	SM	5/4/21	
5/5/2021	7:30 AM	Patricia Wojcik	10044 %th Street	219-741-4857	Recycle not picked up	SM	recycling not picked up on the whole block-texted Dave at Republic		Y	SM		
5/5/2021	7:30 AM	Carol Steele	2648 Glenwwod	219-972-3088	Recycle not picked up	SM	recycling not picked up - texted Dave at Republic		Y	SM		
5/5/2021	7:30 AM	Anita Lahners	2954 101st Street		Recycle not picked up	SM	recycling not picked up - texted Dave at Republic		Y	SM		
5/5/2021	10:08 AM	Daniel Liston	3101 Farmer Dr	(219) 924-7358	Dead Tree/Status?	kw	Please check status of tree and advise resident Tree is dead and will be added to the list for removal. resident advised	Tim	y	MK	5/11/21	1:50 PM
5/6/2021	10:25 AM	Bob -TLC Plumbing	3432 Grand Blvd	219-746-9154	Other: See Notes	SM	Bob from TLC Plumbing installed outside water cleanout and needs an inspection done Done	WT/SW	Y	AK	5/6/21	11:09 AM
5/6/2021	4:17 PM		3843 Ridge Rd		Branches Missed	kw	This guy called a couple of times this week because his branches were out since Sunday night and were not picked up on Monday. I'm not sure what Sandy told him but it sounds like he thought they would be back to get them and have not Grant got them 5/7	Street	Y	AK	5/7/21	11:55 AM
5/7/2021	8:20 AM		Ridge Rd by Main Square		Dead Animal	SM	Dead rabbit on Ridge Road by Main Square - texted Jeff Siple					
5/7/2021	10:36 AM	Elise Fryzell	3510 43rd Street	219-484-0886	Other: See Notes	SM	Elise needs someone to come to her house and locate the water shutoff before she has work done. Please call before you go because she has dogs Paul is there	WT/SW	Y	AK	5/7/21	12:16 PM
5/7/2021	10:45 AM	Carmen Escobedo	8032 Spruce Street	219-614-8783	Other: See Notes	SM	Carmen said someone dropped a tire in front of her house and wants someone to pick it up Texted Jeff Siple		Y	JS	5/7/21	11:00 AM
5/7/2021	11:15 AM	Vincent Spataro	3128 100th Street	219-924-5558	Water Pressure	SM	Vincent is having trouble with his water pressure being very low-wants someone to come out and check it Trey is on his way!!	WT/SW	Y	AK	5/7/21	11:50 AM
5/7/2021	1:10 PM	John Bell	2616 40th Place	219-378-8547	Dead Animal	SM	10-45 in front of the house - texted Jeff Siple		Y	JS	5/7/21	1:10 PM
5/10/2021	9:47 AM	Marcella Fidanza	9208 Waymond Ave	(219) 838-4431	Sewer Backup	kw	Had standing water in the back of the house on the fence line from yesterday's rain (typically don't have drainage issues) Please check the main and she also wanted to know if any neighbors had changed the grade to their properties possibly causing them to all the sudden have standing water after a rain. No water main or sewer in the back, we don't check the grade of of peoples yards. Sent to Dan to talk to them.	wt/sw	Y	AK	5/10/21	1:43 PM
5/10/2021	10:45 AM	Betty Orban	9208 Grace Pl	(219) 614-5272	Sewer Backup	kw	The neighbor across the street had standing water and also on the corner from yesterday's rain. She would like someone to explain to her what they are doing when the pump the water. Call after 3 pm. She is working now. She also wanted to inform us that they replaced the sewers a few years back in the layer of asphalt they put down is in bad shape Jetted and sucked out 5/11	wt/sw	Y	AK	5/11/21	8:45 AM
5/10/2021	11:22 AM	Dave	3104 Franklin	(219) 255-8810	Tree/Branch Issues	SM	There are about 8 trees that need to be trimmed in the parkway and the branches are overgrown - they would like someone to come and trim the trees. .Residents are responsible for maintaining trees in the parkways, we do not do this service,we only remove or have them removed if they are dead.	Street	y	bkb		
5/10/2021	11:22 AM	Dave	2917 Franklin	(219) 255-8810	Tree/Branch Issues	SM	There is a tree in front of this house that branches are coming out of the bottom into the street making it hard to see and also scratching cars as they drive by.Will have Jeff take a look at it and remove branch as needed.	Street	y	bkb		
5/10/2021	12:05 PM	Chris-Matrix Const.	8203 Kennedy Ave	(219) 789-2241	Other: See Notes	SM	Chris needs someone to come and do an inspection on a water service at 8203 Kennedy Ave Got it	WT/SW	Y	AK	5/10/21	1:44 PM
5/10/2021	12:48 PM	Cheryl Steen	8727 Delaware	(219) 743-3440	Pot Hole	SM	There are at least 8 pot holes at 8727 Delaware in the alley next to the churdch by the dumpsters that are very deep and needs to be filled - resident would like someone to come out and take care of this as soon as possible.Will get as soon as possible.	Street	y	bkb		
5/10/2021	12:50 PM	Tom Quinn	9229 Southmoor Avenue	(773) 851-7371	Pot Hole	SM	Resident would like someone to come out and fill the pot hole as soon as possible. Will also get these as soon as possible.	Street	y	bkb		
5/11/2021	8:26 AM	Ally Bachmann	2537 Highway Ave	(219) 455-5166	Locate Lines/B-box	KW	locate sanitary sewer line. Looking into going from septic to the main and the plumber wants to know where the main is before he quotes a price Kyle marked and talked to resident	WT/SW	Y	AK	5/11/21	9:42 AM
5/11/2021	8:45 AM	Erica	10120 Erie Place	(219) 316-3769	Garbage not picked up	SM	garbage not picked up-texted Dave at Republic		Y	SM	5/11/21	8:45 AM
5/11/2021	9:05 AM	Steve Click	9621 5th Place	(219) 742-9648	Water Break	SM	resident called and said water is coming up through the sidewalk- I called Aaron and told him, he is sending someone over there to assess the situation Storm sewer service line appears to be broke, no water main out front. Called and talked to resident who called it in.	WT/SW	Y	AK	5/11/21	9:49 AM
5/11/2021	9:57 AM	Barry Janovsky	3507 Condit	(219) 218-1698	Sewer Backup	kw	Had lines rodded out yesterday, 50ft out and did not help. Please check the main. Our sewers are clear, advised resident	wt/sw	Y	AK	5/11/21	11:04 AM
5/11/2021	12:55 PM	Mike Shelton	3134 44th Street	(773) 512-8871	Dead Tree/Status?	SM	There is a dead tree in the parkway that they would like cut down. Tree is dead, we will remove in the next day or 2. Informed resident.	Street	y	bkb		
5/11/2021	2:01 PM		2523 Martha St		Garbage not picked up	kw	Sent a text to Dave		y	kw	5/11/21	2:02 PM
5/11/2021	2:47 PM	Mike Kobot	8938 Wildwood Drive	(219) 718-4920	Other: See Notes	SM	Resident called in because he was driving southbound on Indianapolis Blvd and noticed that there were a lot of stone in the street from Lincoln to Minor Dunn. He also said the rocks were going into the storm drains.Lou will take care of it.	Street	y	bkb		
5/11/2021	3:20 PM	Jim Munford	2435 Maplewood Court	(708) 253-5958	Branches Missed	SM	Branches missed and resident would like them to be picked up. 2 small branches,should be able to get them Friday.	Street	y	bkb		
5/13/2021	7:34 AM		corner of Liable and 44th Street		Other: See Notes	SM	Resident driving by saw a large limb hanging from a tree at the corner of Liable and 44th Street Resident said they are afraid it is going to fall and hit a car driving by.Did not see any hazardous branch hanging at this location.	Street	y	bkb		
5/13/2021	8:29 AM		8812 Kennedy Avenue	(219) 838-0022	Leaves Pickup	SM	bagged leaves to be picked up.Gave to Jeff	Street	y	bkb		
5/13/2021	8:30 AM		9524 Forrest	(219) 924-4459	Loader Stop	SM	logs to be picked up.Will add to the list.	Street	y	bkb		
5/13/2021	11:50 AM	Frank Basso	3102 99th Place	(219) 934-0868	Pot Hole	SM	Resident said there are 2 pot holes in front of his house and would like them fixed. OK	Street	y	bkb		
5/13/2021	1:10 PM	Debbie Hudson	9508 O'Day Drive	(219) 924-1297	Other: See Notes	SM	Resident's bathroom flooded in her basement and would like someone to come out to check the storm drains to see if there is something wrong Checked sewers and advised her on what she needs to do	WT/SW	Y	Ak	5/14/21	9:09 AM
5/14/2021	7:55 AM	Susana Ramirez	2728 Duluth Street	(219) 743-8850	Dead Animal	SM	1045 in front of 2728 Duluth Street - texted Jeff Siple	Street	Y	JS	5/14/21	
5/14/2021	8:00 AM		2731 Duluth Street		Pot Hole	SM	Resident said there are pot holes in the alley behind 2731 39th Street and would like it to be fixed	Street				
5/14/2021	8:05 AM		3117 99th Place	(219) 316-1549	Branches Missed	SM	branches not picked up on Thursday.They will get them later today.	Street	y	bkb		
5/14/2021	10:48 AM	Martin Anderson	8116 Johnston Street	(219) 718-8014	Dead Tree/Status?	SM	Resident said that the 2 trees that the town planted in the parkway last year are dead and he would like them replaced Grimmer to replace trees from construction project	Tim	y	mk	5/14/21	1:00pm
5/14/2021	11:00 AM	Margaret Brown	8530 Orchard Drive	(219) 924-5589	Sidewalk/Curb Issue	SM	Resident said the tree in her parkway is lifting up the sidewalk and she would like someone to come out and advise -she is afraid a senior citizen is going to fall when walking..Talked to resident and will do a concrete estimate for her.	Street	y	bkb		
5/14/2021	1:15 PM	Melissa Orona	2116 Azalea Drive	(219) 290-5960	Sidewalk/Curb Issue	SM	Resident said the tree in the parkway is lifting up the sidewalk and she would like it replaced. I told her about the sidewalk replacement plan. I also transferred her to Brian so he can explain how it works.	Street				
5/14/2021	3:40 PM	Adele Mendiola	2019 Northwood Lane	(219) 922-8026	Branches Missed	SM	branches missed and resident would like them to be picked up..No branches at this address	Street	y	bkb		
5/17/2021	10:20 AM	David Taylor		219-924-7702	Street Light Out	SM	Resident called - Light Post F8 - street light out at the corner of 45th and Gordon Avenue - northeast corner in front of the firestation..Will put on the list when Jeff does street light checks at the end of May or Beginning of June.	Street	y	bkb		
5/17/2021	12:45 PM	Ahmad Hussein	9316 Parkway Drive	219-588-0892	Locate Lines/B-box	SM	Resident has a water leak and needs the B-box located for the plumber to fix leak - Kyle located	WT/SW	Y	AK	5/17/21	2:06 PM
5/17/2021	2:05 PM	Tarun Patel	3106 Farmer Drive	(219) 321-3622	Water Pressure	SM	Resident says her water pressure is very low and wants the pressure higher Kyle chekced and talked to resident	WT/SW	y	AK	5/18/21	6:08 AM

5/17/2021	3:00 PM	Michael Stone	10358 Prairie Ave	(831) 241-3246	Water Pressure	kw	Wednesday or Thursday please check bbox and make sure it is open all the way Resident is having issues with pressure for a long time he will be home Wednesday and Thursday 6:30 am to 9:30 am Kyle checked the valve, it is fully open. Called and spoke with him.	wt/sw	Y	AK	5/18/21	6:08 AM
5/18/2021	11:13 AM	Tim Reyes	3341 Jewett	(219) 712-4546	Branches Missed	sm	Resident said his branches were missed and would like them picked up - I texted Jeff ,we will get them this week sometime.	Street	y	bkb		
5/18/2021	11:30 AM	Kimberly Davis	2728 Glenwwod Street	(708) 829-0289	Garbage not picked up	sm	Resident said her garbage was not picked up - I textd Dave at Republic	Street				
5/18/2021	11:33 AM	Lizbet Badilla	9317 Wildwood Dr	(219) 455-7347	Dead Tree/Status?	kw	Resident says the parkway tree is infested with ants, please check and advise.Tree is not dead, so they can treat tree with an insect/ant pesticide	Tim	y	bkb		
5/18/2021	12:45 PM		3143 Grand Blvd		Garbage not picked up	sm	Resident said her garbage was not picked up - I texted Dave at Republic		Y	SM		
5/18/2021	1:15 PM	Garza	10035 4th Place		Recycle not picked up	sm	Resident said his recycling was not picked up for a month - I texted Dave at Republic		Y	SM		
5/18/2021	3:57 PM	Jonnica Bianchi	8812 Kennedy Avenue	(219) 888-0022	Leaves Pickup	sm	Resident has some leave bags that need to be picked up - she was sited to clean up her yard.Sean and Tim will get them.	Street	y	bkb		
5/19/2021	7:47 AM	Chad Jones	9530 Wildwood	(219) 588-0498	Garbage not picked up	sm	Resident said his garbage was not picked up - I texted Dave at Republic		Y	SM		
5/19/2021	8:36 AM	Tara Smith	8322 Liable Road	(219) 808-2347	Other: See Notes	sm	Resident said public works mowed all her flowers on her property- she is very upset.Sweet talked her and all is good.	Street	y	bkb		
5/19/2021	9:42 AM	Feikema	8831 Waymond	(219) 741-5796	Other: See Notes	kw	exterior drain tile inspection @ noon tomorrow 5/20/21 Gave to Kyle Done	wt/sw	y	AK	5/20/21	9:02 AM
5/19/2021	12:24 PM	Paul Palmy	2819 100th Street	(219) 922-3619	Recycle not picked up	sm	Resident said recycle not picked up at 2819 / 2817 / 2823 / 2825 100th Street - I texted Dave at Republic		Y	SM		
5/19/2021	2:32 PM	Sharon Molodet	2048 Northwood Lane	(219) 924-8925	Dead Tree/Status?	sm	Resident said the tree directly across the street from 2048 Northwood Lane is dead [the tree is next to a Nipsco box] and she would like it removed. Tree is dead will schedule to have it removed by us.	Tim	y	bkb		
5/20/2021	2:07 AM	Dale Wolak	8205 Grace Place	(219) 757-1163	Locate Lines/B-box	sm	Resident needs their B-box located - Locates called to install in the next week or two	WT/SW	Y	AK	5/21/21	1:24 PM
5/21/2021	7:30 AM	Dan Malone	2054 Ridge Road	(219) 682-5401	Other: See Notes	sm	Resident called and said there is a man hole in front of his house. Every time a truck passes and hits it, his house shakes. Dan would like to discuss how this problem can be resolved. He would like a phone call back. Jimmy tarred it.	WT/SW	Y	AK	5/21/21	10:11 AM
5/21/2021	12:57 PM	Nancy Godinez	9643 Spring Street	(708) 768-4074	Other: See Notes	sm	Resident wants to know if someone can come out to her house and test her water for rust Called and spoke with her.	WT/SW	Y	AK	5/21/21	1:48 PM
5/24/2021	8:38 AM	Jan	Kennedy Ave	(219) 671-6983	Dead Animal	sm	10-45 on Kennedy Ave south after the railroad tracks before Main Street.Gave to Jeff	Street	y	bkb		
5/24/2021	10:15 AM	Bob -TLC Plumbing	2247 OAKDALE Street	(219) 922-6214	Other: See Notes	sm	Bob from TLC Plumbing needs an inspection done 5/25/21 at 1:00PM - he has a sewer job to connect the sump pump to the sewer They are not ready.	WT/SW	Y	AK	5/26/21	6:10 AM
5/24/2021	10:30 AM	Kristin	NE corner of Main Square	(219) 838-6850	Other: See Notes	sm	Resident said water was gushing out of the ground at the NE corner of Main Square, then called back and said it stopped. I called Aaron to let him know and he is calling Trevor to tell him They were testing the sprinkler heads	WT/SW	Y	AK	5/24/21	1:38 PM
5/24/2021	10:43 AM	Robert Duddy	3625 Wirth Road	(219) 677-9210	Other: See Notes	sm	Resident called and would like the street cleaner to go down his street because he said it looks like slime going to the sewer.Its not slime but the sump pump of the house to the west and the water is running down the curb line mixing with the helicopter seeds from the trees, Lou will sweep when he is in this area later this week or early next week.	Street	y	bkb		
5/24/2021	1:35 PM	Sharon Laflech	8132 Sycamore	(219) 838-3346	Other: See Notes	sm	Resident hit her B-box with her lawnmower and broke the top of it and would like it replaced Kyle lowered it as much as he could and switched the lid	WT/SW	Y	AK	5/24/21	2:21 PM
5/25/2021	2:59 PM	Tom	3123 Strong St	(219) 512-2568	Branches Missed	kw	branches have been out for 2 weeks and keep getting skipped.The small handful of branches are picked up.	Street	y	bkb		
5/26/2021	9:50 AM	Jackie Sleeman	3422 Eder Street	(219) 501-1148	Water Pressure	sm	Resident is wondering why her water pressure is low, she would like someone to come and check it out to see what the problem is Kyle checked and spoke with the resident	WT/SW	Y	AK	5/26/21	11:36 AM
5/26/2021	12:31 PM	Judy Rarrick	3207 Lincoln Street	(219) 923-8106	Leaves Pickup	sm	Resident said there are 2 big bags of leaves that has been sitting there for months. These bags are located at the corner of Parrish and Lincoln in the alley next to fence. She woulld like someone to come and pick it up.Gave to Kevin and Tim	Street	y	bkb		
5/27/2021	9:30 AM	Cynthia Sorbellini	9337 Ellen Drive	(708) 973-7658	Other: See Notes	sm	Resident would like to know if she can cut down a bush right next to her fence on the easement of the bike path I called Cynthia back and told her that the Parks Dept is who she neede to ask about this. I transferred her to the Parks Dept.	Street	Y			
5/28/2021	9:09 AM		8024 Richard St		Sewer Backup	kw	Resident stopped in, storm sewer backs up everytime it rains and the road is currently flooded. Whirly Birds block the inside of the drain. Munster jetted	wt/sw	Y	AK	5/28/21	10:32 AM
5/28/2021	10:03 AM	Greg Bennett	3202 Wirth Road	(219) 218-7336	Loader Stop	sm	Resident said a tree came down from the storm and would like it picked up...This is Wednesday route, its just a pile of branches in the parkway, they should get picked up next week.	Street	y	bkb		
5/28/2021	11:40 AM	Joel Juarez	2022 37th Place	(708) 374-9424	Dead Animal	sm	resident has a 10-45 in front of their house I texted Jeff to let him know	Street				
6/1/2021	7:30 AM	Claude Dratwa	3344 Duluth	(219) 838-2067	Sewer Backup	sm	Resident said there is standing water at the sewer in front of his house I moved the leaves off the basin and will semd the jet truck to double check when it is done	WT/SW	Y	AK	6/1/21	8:08 AM
6/1/2021	7:30 AM		3203 Farmer	(219) 934-0851	Other: See Notes	sm	Resident said there is a cable hanging down behind her garage tangled in a tree. Told resudent to call Nipsco because they cut the trees down	Street				
6/1/2021	9:30 AM	Bob	9028 Kennedy Avenue		Branches Missed	sm	Resident said his branches were missed and would like them picked up - the branches are on the side street of Parkway Grant got them	Street	Y	AK	6/2/21	6:05 AM
6/1/2021	10:03 AM	Patty Hutsler	8124 Johnston	(219) 923-6781	Dead Tree/Status?	sm	Resident would like someone to come out and check the status of her tree because she said it is dead. She would like it replaced Grimmer will replace	Tim	y	tg		
6/1/2021	1:22 PM	Simon Siba	3139 Eder Street	(219) 308-4378	Branches Missed	sm	Resident said his branches have been sitting out for 2 weeks and he would like them picked up Gave to Grant	Street	Y	AK	6/2/21	12:23 PM
6/2/2021	9:24 AM	Betty Hartz	3233 Ridge Road	(219) 743-5514	Dead Animal	sm	10-45 Resident said it has been there for 2 days and smells bad if someone could please pick it up On the list	Street		AK		
6/2/2021	10:49 AM	john Winkiel	3420 Glenwood Street	(219) 545-3226	Dead Tree/Status?	sm	Resident would like someone to come out and check the status of his tree. He said the tree is dead and wants it to be taken out Needs pruning not dead	Tim				
6/2/2021	11:10 AM	Shelby - PD	Indianapolis Blvd		Dead Animal	sm	10-45 [deer]on Indianapolis Blvd between Ridge and the bus depot Bob picked it up	WT/SW	Y	AK	6/2/21	12:22 PM
6/2/2021	12:55 PM	Alberto	2825 Jewett Ave	(219) 923-8713	Locate Lines/B-box	kw	Needs bbox located for inside valve repair sometime next week. Will call when he is ready to have it shutoff, locate this week if possible Gave to Paul	wt/sw	y	AK	6/3/21	2:43 PM
6/3/2021	8:50 AM	Tom Kostoff	8329 Grace Street	(21) 992-3128	Pot Hole	sm	Resident has a pot hole in front of his house and would like it fixed..Brendan will get it.	Street	y	bkb		
6/3/2021	11:18 AM	Dana Campos	8037 Duluth St	(219) 427-2151	Dead Tree/Status?	kw	Check tree status and advise. Tree is dead, we will remove,talked to resident.	tim	y	bkb		
6/3/2021	11:20 AM	Raymond Haack	9947 Delaware Place	(219) 924-9338	Branches Missed	sm	Resident said the truck drove past his house without picking up the branches done	Street	Y	AK	6/3/21	1:47 PM
6/3/2021	11:25 AM	Fred Callaway	3112 98th Place East	(219) 924-4251	Branches Missed	sm	Resident said the truck drove past his house without picking up the branches done	Street	Y	AK	6/3/21	1:47 PM
6/3/2021	1:12 PM	Larry Moes	2904 Clough Ave	(219) 864-0069	Other: See Notes	sm	Resident called and said he talked to Brian in the spring about the Sidewalk Replacement Project. Resident has a contactor and will be starting next week. The contractor has a permit from the town already. I called Tom and told him Brian was on vacation and would be back on Monday Contractor is coming Wednesday to pour new walks, needs removed prior to this date. Tom said Brian had told him back in the spring that he needed a 3 day notice to get the sidewalk remove, this is the notice :)	Street	y	bkb		
6/4/2021	9:42 AM	Joran Bastaic	2849 Ross St	(219) 306-6656	Other: See Notes	kw	Maybe 5 squares of concrete heaved due to tree roots. Please give him an estimate for the concrete replacement program..Estimate has been given to resident.	Street	y	bkb		
6/4/2021	10:45 AM	Evelyn Mejan	9324 4th street	(219) 922-8029	Water Pressure	sm	Resident would like someone to come out and check the water pressure : Resident will be home until 4:30 today if someone can go Matt checked, pressure is normal.	WT/SW	Y	AK	6/7/21	1:38 PM
6/7/2021	8:30 AM	Shelby - PD	Kennedy Ave & 43rd		Dead Animal	sm	10-45 at Kennedy and 43rd..Dennis will get it.	Street	y	bkb		
6/7/2021	9:03 AM	Tonette Nason	2245 Teakwood Circle Apt# A	708-710-2125	Water Pressure	sm	Resident said her water pressure is very low. She would like someone to contact her to come out and see why her water pressure is so low Matt checked, water pressure is normal.	WT/SW	Y	AK	6/7/21	1:37 PM
6/7/2021	9:30 AM	Fernando Garcia	2910 Clough Avenue	(219) 292-2130	Other: See Notes	sm	Resident would like someone to call him about the Sidewalk Replacement Program. He is very interested in doing this.Taken care of.	Street	y	bkb		
6/7/2021	10:15 AM	Fern Felton	2900 43rd Street	219-208-9235	Other: See Notes	sm	Resiident said every time a car drives by and hits the sewer cover it makes a thump. He said it needs to be cleaned out around it. Jimmy tarred it, it is tight.	WT/SW	Y	AK	6/7/21	11:33 AM
6/7/2021	11:21 AM	Marilyn Majchrowicz	2035 Cedar Circle	(219) 836-0591	Branches Missed	sm	Resident said her branches were not picked up on Friday and could someone please pick them up,,These are small shrubs/yard waste bushes, we will get them sometime this week or on Friday with the loader stops.	Street	y	bkb		
6/7/2021	1:30 PM		8727 Cottage Grove Avenue	(708) 254-7036	Leaves Pickup	sm	Resident said her leaves were not picked up and could someone please pick them up today [Jewett St behind her house}...Gave to Dennis, he will get them as long as they are bagged.	Street	y	bkb		
6/7/2021	1:37 PM	Tom Rau	3106 Condit	(219) 776-7262	Other: See Notes	sm	Resident wants information on the Sidewalk Replacement Program as soon as possible..Talked to resident.	Street	y	bkb		
6/8/2021	7:37 AM	Alberto Espinoza	2825 Jewett Avenue	(219) 923-8713	Water On/Off Req.	sm	Resident needs water shut off as soon as possible because he has a plumber coming to do repairs Paul will go asap	WT/SW	Y	AK	6/8/21	2:10 PM
6/8/2021	7:51 AM	Elsa Hurtado	3652 Boulavard Drive	(219) 682-7815	Dead Tree/Status?	sm	Resident said her tree is real dry and she thinks it is dead. She would like isomeone to come out and advise..Tree is not dead just needs some trimming and pruning to clear out some dead wood	Tim	y	bkb		
6/8/2021	8:12 AM	Barbara Randall	8028 Duluth Street	(708) 277-7290	Branches Missed	sm	Resident said she had branches picked up yesterday but still had some in her yard beacause the parkway was full. She wants to know if the other branches could be picked up today...Chipper crew picked up every thing in the parkway, resident did put rest of branches from front yard to parkway so they will be picked up on next Monday's pick up day unless they have time later this week.	Street	y	bkb		

6/8/2021	8:22 AM	Melanie Moynihan	9147 Grace Strret	(219) 682-4801	Dead Tree/Status?	sm	Resident said the tree in the parkway is dead and someone was supposed to come and cut it down and no one has came there yet..Marked and added to list for Dave's Tree Service	Tim	y	bkb		
6/8/2021	8:45 AM	Randall Leoucki	2814 Ross	(219) 616-7674	Branches Missed	sm	Resident called and said branches were missed Monday. He said he watched the truck come by and the guys get out and looked but did not take anything. I told him that maybe it could have been a loader stop because of the size..Loader stop, plus there is wood mixed in with it.	Street	y	bkb		
6/8/2021	10:50 AM	Tim Ispas	3339 Wirth Road	(219) 781-5329	Other: See Notes	sm	Resident called complaining that there are workers there and wanted to kmow what they are doing because his yard and sprinkler system is being tore up again..Getting concrete ready from the water break we had in front of there house which seemed fairly obivous.	Street	y	bkb		
6/8/2021	11:18 AM	Donald Johnson	8952 Grace Street	(219) 838-7530	Garbage not picked up	sm	Resident said his garbage was not picked up - I texted Dave at Republic		y			
6/8/2021	11:50 AM		8803 Woodward	(312) 898-2069	Branches Missed	sm	Resident asked if his branches could be picked up, he put them out a little late. He is in the Tuesday route..Chipper crew will get them today.	Street	y	bkb		
6/8/2021	1:55 PM	resident	45th Avenue		Dead Animal	sm	10-45 on Kennedy Ave by B&F Pools {sidewalk] called Brian and he is sending Dennis	Street	y	bkb		
6/8/2021	2:01 PM	Frank	9324 Cline Avenue	(219) 972-1576	Other: See Notes	sm	Resident said someone changed a tire by his house and just left the tire on the side by the bike path. Can someone come and pick it up..Gave to Dennis	Street	y	bkb		
6/9/2021	8:06 AM	Grant Garcia	2445 Lincoln	(219) 688-4690	Other: See Notes	sm	Resident said there are a lot of seeds in the street on Osborn and Lincoln by the sewer. Could you please have the street sweeper go by to pick up	Street				
6/9/2021	9:13 AM	Janice Gardow	9406 Wildwood Drive	(219) 924-4003	Garbage not picked up	sm	Resident said her garbage was never picked up. I texted Dave at Republic		Y	sm		
6/9/2021	10:00 AM	Michelle Cruz	3138 Condit Street	(708) 205-9467	Other: See Notes	sm	Resident would like someone to come out and check her alley. She would like it repaved because she said when it rains the water goes to her house and she doesn't want it to flood..Alley looks good to me but will add it to list to be graded next we are working on alleys.	Street	y	bkb		
6/9/2021	10:11 AM	Pam Wisler	9617 Farmer Drive Unit 201	(219) 836-2400	Other: See Notes	sm	Resident received a bill for over $400.00 he then fixed his leaky toilet but now received a bill for over $200.00 Resident would like someone to check the meter to see if it is ok Paul is going to pull the history, I will call the resident kw 6/9/21	WT/SW	y	kw		
6/9/2021	10:44 AM	Sherry Shelbourne	9605 Boulevard Drive	(219) 513-9603	Other: See Notes	sm	Resident said her grass got to much salt from the plow trucks. We seeded but the rain washed most of the seed away and now she has weeds. She wants it reseeded.	Street				
6/9/2021	12:40 PM	Caroline Dotson	8203 Sycamore Avenue	(219) 290-0041	Other: See Notes	sm	Resident called and said that someone spray painted graffiti on the street at Sycamore Avenue and 81st Street with bad language. She would like to know if someone can come and clean it up..Didnt see anything, sent Dennis to see if he could find anything.	Street	y	bkb		
6/10/2021	7:44 AM	William Shary	3926 Clough Avenue	(219) 218-0224	Dead Tree/Status?	sm	Resident said both trees in his parkway are dead and would like them cut down Added to list for Dave's Tree Service	Tim	y	kw		
6/10/2021	1:00 PM	Migdalia McCall	2123 Bluebird Lane	(219) 677-4101	Other: See Notes	sm	Resident said her branches were picked up and a lot of debris was left and she wants to know if the street sweeper can come down her street to clean up what was left..ok	Street	y	bkb		
6/10/2021	1:36 PM	Matthew Csonka	2049 Ridgewood Street	(219) 455-9490	Drainage Issues	sm	Resident said when it rains he has standing water in his backyard and wants to know which way his sewer line runs. He wants someone to come out and see if there is a problem Spoke with him	WT/SW	Y	AK	6/15/21	1:40 PM
6/11/2021	9:30 AM	Ron Gerber	9214 Kennedy Avenue	(219) 922-7526	Other: See Notes	sm	Resident said the easement by his house has weeds that are over 4 feet tall. He has been cutting it but feels this is the towns responsibility because this property belongs to the town..The Town does not own this,we do not maintain easements between houses talked to resident and advised to contact code enforcement.	Street	y	bkb		
6/11/2021	9:36 AM	Judith Herrera	9116 Spring Street	(219) 801-8201	Dead Animal	sm	10-45 on the road in between her house and the neighbors house..Gave to Dennis	Street	y	bkb		
6/11/2021	9:47 AM	Andrew Antunez	2515 Longwood Drive	(562) 209-2580	Other: See Notes	sm	Resident said the street has many pot holes, he wants to know if someone can come out and fix the road - please advise Also Resident is on the board for Longwood Condominiums and wants to know if they can get a one way sign because they want to somehow create more parking for residents..This street does not belong to the Town and they will have to contact John Banasiak of the Safety Traffic Commision about the sign, but might be up to them to install sign since its private property.	Street	y	bkb		
6/14/2021	8:23 AM	Donna Mclean	2043 White Oak Lane	(312) 770-0344	Branches Missed	sm	Resident wants to know if her branches can be picked up..Yes on Friday.	Street	y	bkb		
6/14/2021	3:40 PM	Julie Kieft	3533 45th Street	(219) 678-4762	Dead Tree/Status?	kw	Resident said she thinks the tree is dead, dropping lots of branches. Tree is dead, will add to Dave's list.	Tim	y	bkb		
6/15/2021	9:37 AM	Dee Reaves	8243 Sycamoe Avenue	(773) 654-8117	Sign down/damaged	sm	Resident said a truck knocked down the stop sign at Grand and Sycamore. She said cars were not stopping at the corner last night at all . They tried to put the sign up but would like it to be fixed as soon as possible..Temp sign up, Jeff will take care of it .	Street	y	bkb		
6/15/2021	9:44 AM	Larry Dora	2000 Idlewild Court	(219) 775-5623	Sidewalk/Curb Issue	sm	Resident would like information on the sidewalk replacement program..ok	Street	y	bkb		
6/15/2021	2:10 PM	Barbara Alonzo	8016 Glenwood Street	219-923-2712	Water Pressure	sm	Resident said she has any water pressure. She would like someone to come out to see whwt the problem is Paul checked and advised, not our issue	WT/SW	Y	AK	6/15/21	2:51 PM
6/16/2021	7:42 AM	Terunbhea Patel	3106 Farmer Drive	(219) 805-7962	Water Pressure	sm	Resident saiid she has no water pressure and would like someone to check the problem and advise Checked and advised resident	WT/SW	Y	AK	6/17/21	12:53 PM
6/17/2021	7:30 AM	Victor	9618 Liable Road		Sign down/damaged	sm	Resident called and said the Stop Sign on Liable and 44th Place is leaning over about to fall. He thinks someone hit the sign…It's the street sign and Jeff will straighten up.	Street	y	bkb		
6/17/2021	10:22 AM	Terun Patel	3106 Farmer Drive	(219) 321-3622	Sidewalk/Curb Issue	sm	Resident would like information on the sidewalk replacement program…Resident is good.	Street	y	bkb		
6/17/2021	11:00 AM	Linda Torringa	9512 Erie Street	(219) 922-1566	Branches Missed	sm	Resident called and asked if her branches could be picked up. She put them out a little late for pickup today..Dlyan will get them today.	Street	y	bkb		
6/17/2021	3:13 PM	Alice Bronisz	2641 40th Street	(219) 924-1852	Branches Missed	sm	Resident said their branches were missed today on their pickup day Gave to Dylan, it was put down as a loader stop and they took care of it	Street	Y	AK	6/18/21	9:45 AM
6/17/2021	3:33 PM	Chris	2229 41st Street	(219) 789-2241	Other: See Notes	kw	Currently on septic and well and wants to know if stubs are available for this property to tie into mains Located and spoke with the plumber	WT/SW	Y	AK	6/22/21	11:33 AM
6/18/2021	1:19 AM	Joan Klickmann	9135 Idlewild	(219) 972-9831	Branches Missed	sm	Resident put branches out late for her pickup today and wanted to know if they could be picked up ..Loader Stop.	Street	y	bkb		
6/21/2021	7:43 AM	Claudia Furnas	3333 Duluth	(219) 781-7777	Other: See Notes	sm	Resident called and said there is Standing water on the south side of Duluth Street right before Grace St Jimmy cleaned the bason off	WT/SW	Y	AK	6/21/21	2:13 PM
6/21/2021	8:35 AM	David Taylor	9512 Hook Street	(219) 924-7702	Street Light Out	sm	Resident said the street light at the northeast corner of 45th and Gordon Drive is out. The pole number is F8.Will put on the next list for Midwestern	Street	y	bkb		
6/21/2021	8:41 AM	Esmeralda Zamora	2093 Ramblewood Drive	(219) 545-9452	Tree/Branch Issues	sm	Resident called and said there is a tree down in the parkway…Taken care of.	Street	y	bkb		
6/21/2021	8:44 AM	Shelby - PD	41st and Lincoln Street		Tree/Branch Issues	sm	Shelby called and said there is a tree down at Lincoln and 41st by the bike path I Called parks dept to let them know	Street	Y	sm	6/21/21	
6/21/2021	12:57 AM	Ken Broholm	8416 Grace Street	(708) 990-5479	Dead Tree/Status?	sm	Resident said the tree in the parkway is dead .[tree closest to neighbors driveway] Please advise. Tree marked for Dave's and left a letter for the resident.	Tim	y	bkb		
6/21/2021	11:45 AM	Kevin Beveridge	9812 Delaware	(574) 215-1013	Sink Hole	sm	Resident called and said there is a sink hole by the fire hydrant 2' x 3 1/2' 2' deep Dan checked, ground appears to be settling, Filled with dirt and seeded.	WT/SW	Y	AK	7/1/21	12:33 PM
6/21/2021	12:20 PM	Carrie Pement	3109 Grand Blvd	(219) 775-0130	Branches Missed	sm	Resident called and said branches were missed today..We are working on storm damage from last nights storm, plus the day isnt over yet.	Street	y	bkb		
6/21/2021	2:15 PM	Cheryl steen	8727 Delaware	(219) 743-3440	Pot Hole	sm	Resident called to say THANK YOU for fixing the pot holes that were by the dumpster. She also said there are more pot holes that need to be fixed in the alley. ...Ill take a look at it.	Street	y	bkb		
6/22/2021	7:30 AM	Brian Kruse	3815 Clough	(708) 949-2724	Dead Tree/Status?	sm	Resident said both tree's in the parkway are dead and invested with termites Please advise.Marked both trees for removal, left resident a letter.	Tim	y	bkb		
6/22/2021	7:53 AM	Michelle Valentino		(219) 306-6909	Pot Hole	sm	Resident said on Ridge Road over Kennedy Avenue it looks like the road is buckling in the middle. Maybe a pothole She said it wasn't there a couple of days ago. Seemed fine to me, didn't notice anything out the ordinary.	Street	y	bkb		
6/22/2021	9:10 AM	Sue Keck	2209 Terrace Drive	(219) 545-2263	Dead Tree/Status?	sm	Resident said Thank You for cutting the tree down. She said they told her that she needed to call us for someone to come and grind the tree stump down. Please advise. Resident has been advised.	Tim	y	bkb		
6/22/2021	5:16 PM	Avis Beitz	3021 44th Street	(219) 680-9434	Tree/Branch Issues	sm	Resident called and said there is a big branch on the sidewalk and parkway that is to big for her to move. Can someone come and pick it up.Branch is in the parkway and the chipper crew will get it on Thursday route.	Street	y	bkb		
6/22/2021	3:51 PM	Betty Hyflop	8124 Sycamore	(219) 838-0705	Tree/Branch Issues	sm	Resident said the tree's in the parkway need to be trimmed and also have bugs Resident would like someone to come out and trim the tree's. We do not trim trees,its up to the residents to maintain the trees in the parkways.	Street	y	bkb		
6/23/2021	11:08 AM	Ryan Guterkunst	8334 Cottage Grove Avenue	(219) 776-7926	Dead Tree/Status?	sm	Resident said the tree in the parkway is dead. Please advise. Marked for removal. Town will take this one down,talked to resident.	Tim	y	bkb		
6/23/2021	3:09 PM	Marissa Biegel	3449 Lincoln Street	(708) 837-6641	Locate Lines/B-box	sm	Resident needs someone to come out and locate her water and sewer lines so she can figure out where she can put a fence. Please call Marissa before you go so she can come outside with you Paul went and marked	WT/SW	Y	AK	6/24/21	11:43 AM
6/24/2021	8:55 AM	Ashley Guevara	9624 Forrest Drive Apt N 1	(219) 334-7717	Water On/Off Req.	sm	Resident needs someone to come out to shut her water off. She is not sure what is going on, sewage is coming up by the water heater. Dan is going to check our sewers and talk to her.	WT/SW	Y	AK	6/24/21	1:58 PM
6/24/2021	10:16 AM	Amanda Grove	9044 Kennedy Avenue	(586) 246-5796	Other: See Notes	sm	Resident said she woke up to no water in her house. Paul went to check	WT/SW	Y	AK	6/24/21	1:58 PM

6/24/2021	1:05 PM	Bernadette Paucak	3116 Lakeside Drive	(219) 924-8271	Branches Missed	sm	Resident asked if her branches could be picked up, I told her we were a day behind picking up and that the chipper would be there tomorrow ..Branches were picked up…and yet the work day is still not over.	Street	y	bkb		
6/24/2021	2:22 PM	Charlene Becze	3009 Grand Blvd	(219) 644-5187	Other: See Notes	sm	Resident would like information on the Sidewalk Replacement Program. Referred by Bernie Zemem..Called resident and left message.	Street	y	bkb		
6/25/2021	8:24 AM	Brian Rudloff	2110 Birchwood Lane	(219) 644-8861	Branches Missed	sm	Ok, today is not over yet, they should be picked up today.	Street	y	bkb		
6/25/2021	8:41 AM	Mary Ann Tuskan	8933 Cottage Grove Avenue	(219) 838-6965	Water Meter	sm	Resident said water is leaking around her water meter. Can someone come out asap to check. She said her meter was replaced about 5 months ago Kyle is going to check it	WT/SW	Y	AK	6/25/21	9:36 AM
6/25/2021	11:20 AM	Dominic Vasile	2405 River Drive	(219) 838-8440	Tree/Branch Issues	sm	resident called and said the tree split and a big branch fell off the tree in the parkway from the storm last night and could someone come and get it please He is afraid the tree is going to fall down..Jeff going there to look at it, contacted Daves for removal.	Street	y	bkb		
6/28/2021	9:00 AM	Chip Whitney	2942 Highway Ave	(219) 746-1169	Other: See Notes	sm	Owner said we planted a bush in front of his business that has a lot of berries and they are everywhere, also attracting ants. Can that bush be removed? Please advise owner..Will take a look, but we didn't plant any bush that I know of.	Street	y	bkb		
6/28/2021	9:32 AM	Marshall Robertson	9524 Farmer Drive	(219) 201-3197	Drainage Issues	sm	Resident said the storm drain is filled with debris and needs to be cleaned at 43rd and Farmer	WT/SW	Y	AK	6/28/21	12:04 PM
6/28/2021	9:40 AM	Mike James	10330 Indianapolis Blvd	(219) 902-9886	Drainage Issues	sm	Business owner (Bills Movers) said he has water coming in his office from the flooding and says this is Highlands responsibility. He wants someone to come out and take care of this problem. Talked to owner, asking Derrick to look into who owns the property out front and see if there is anything we can do to remedy the situation.	WT/SW	Y	AK	6/28/21	12:07 PM
6/28/2021	10:07 AM	Karen Walski	2023 Briarwood Ln	(219) 922-8756	Tree/Branch Issues	sm	Resident said the storm knocked a branch down from her tree and it is just hanging. Can someone come out and get the branch, she can not get it Please advise resident Sent Jeff to look at it.	Street	Y	AK	6/29/21	8:38 AM
6/28/2021	10:10 AM	Bettina Casper	3726 Highway Avenue	(219) 677-3313	Other: See Notes	sm	Resident said we did work around the utility pole and now there is a big divit . She would like someone to come out and fill it in with black dirt and seed. Please advise resident..We didn't do any work around any pole, but will check it out, probably another utility company.	Street	y	bkb		
6/28/2021	10:21 AM	Melissa Orona	2116 Azalea Drive	(219) 290-5960	Dead Tree/Status?	sm	Resident said her tree in the parkway is dead. Please advise resident Trees are not dead need pruning	Tim	y	mk	7/2/21	
6/28/2021	10:35 AM	Doug Rottier	9514 Erie Street	(219) 313-9277	Drainage Issues	sm	Resident said water is coming up through basement floor drain He said we came out before and jetted out the storm sewer in the alley and could we do that again. Please advise resident Gave to Jimmy, jetted santitary in alley. There is no storm.	WT/SW	Y	AK	6/28/21	1:37 PM
6/28/2021	10:47 AM	Jessica Gutierrez	2735 Glenwood Street	(219) 713-8356	Drainage Issues	sm	Resident said the alley is flooded and nothing is draining in the sewer Please advise resident Jimmy jetted and drained	WT/SW	Y	AK	6/28/2021	12:26 PM
6/28/2021	10:50 AM	Dominic Noce	8931 Liable Road	(219) 218-3460	Other: See Notes	sm	Resident had the Sidewalk Replacement done. They used sand and pebbles instead of black dirt and when it rained the seed washed away . Can someone come back out and reseed Please advise resident..Sean and Tim will dress it up for him.	Street	y	bkb		
9/28/2021	11:06 AM	Sara Rizzi	9319 4th Place	(708) 945-5589	Drainage Issues	sm	Resident said water and sewage came up through the drain in their basement between 6 and 7pm on Saturday 6/26/21 Please advise Talked to her and advised	WT/SW	Y	AK	6/29/21	8:24 AM
6/28/2021	1:31 PM	Donald Smith	9244 Wildwood Drive	(219) 972-0714	Drainage Issues	sm	Resident said the street was flooded and the sewer drain was shooting water up in the air The neighbors drain is also not draining because of debris. Resident also thinks the cover is the wrong size Please advise resident Jimmy checked, drains fine, lid is correct size, small grates because its in a walkway.	WT/SW	Y	AK	6/29/21	8:26 AM
6/28/2021	3:05 PM	Kevin Beveridge	9812 Delaware Place	574-215-1013	Other: See Notes	sm	Resident said we Filled in around the driveway and fire hydrant and now there is a sink hole next to the driveway Can someone come back out and fill in and seed again Please advise Filled with dirt and seeded	WT/SW	Y	AK	7/1/21	12:35 PM
6/28/2021	3:20 PM	Socorro Garza	2850 Franklin Avenue	(708) 829-0785	Dead Tree/Status?	sm	Resident said her tree in the parkway is dead. Please advise resident	Tim				
6/28/2021	3:57 PM	Abbey Rue	9444 Anthony Pl	(219) 924-2820	Sewer Backup	kw	On the 43rd St side, had water in the side yard and basement over the weekend. Sent Jimmy to check the main	WT/SW	Y	AK	6/29/21	6:12 AM
6/29/2021	8:00 AM	Timothy Sundberg	9006 Kleinman	(219) 513-6138	Sink Hole	sm	Resident said there a sink hole about 8 feet from the street. Also his water pressure is low He would like someone to come and check the water main Please adviise and call resident It's a low spot in his yard, he appears to have a mole issue. Paul will go test his water pressure	WT/SW	Y	AK	6/29/21	8:45 AM
6/29/2021	8:00 AM	Allison Zuniga	9440 Hook Street	(708) 460-3500	Sink Hole	sm	Resident said there is a sink hole by her sidewalk and her neighbor fell over it she put cones around it until someone can come and look at it Dan checked both sewers, they are fine. Looks like it is sinking by their sprinkler head.	WT/SW	Y	AK	6/29/21	8:57 AM
6/29/2021	8:00 AM	Norris - PD	Ridge Road overpass	(219) 333-0709	Other: See Notes	sm	PD called and said there is graffitI on the east side of the street of the overpass on 4 columns Jeff has been advised	Street	Y	AK	7/1/21	12:34 PM
6/29/2021	8:39 AM	Teresa Laroche	8946 Grace Street	(219) 616-6515	Drainage Issues	sm	Resident said the gutters go into a pipe underground that drains toward the street and it is backing up and coming up on the sidewalks. The ground around the perimeter of the house is under water Please advise resident what will be done Jimmy talked to her, her sump line appears to be clogged	WT/SW	Y	AK	6/29/21	10:41 AM
6/29/2021	10:31 AM	Donald Erminger	2244 45th Street - Stracks	(219) 545-4015	Water Pressure	sm	Water pressure used to be in the high 30'5 psi per cory at TLC Plumbing now it is at 8 - 10 psi. Donald would like someone to come out and check if there is a problem Please advise Paul checked and advised. Probably because the water tower was down.	WT/SW	Y	AK	6/29/21	12:41 PM
6/29/2021	12:00 PM	Pam Zalewski	3904 Wirth Road	(219) 923-7011	Drainage Issues	sm	Resident said her whole yard flooded Can someone come out and check the sewer to find out what is going on Jimmy jetted	WT/SW	Y	AK	6/29/21	12:57 PM
6/25/2021	12:52 PM	Tara Smith	8322 Liable Road	(219) 808-2347	Branches Missed	sm	resident said her branches were missed for 2 weeks/ other neighbors have branches out also Grant will get them today	Street	Y	AK	6/30/21	1:29 PM
6/29/2021	1:12 PM	John Dotson	8203 Sycamore Avenue	(219) 512-6116	Drainage Issues	sm	Residents yard floods every time it rains and it takes forever for it to drain. Can someone come and check what the problem is Jimmy checked, field is flooded and draining out slowly	WT/SW	Y	AK	6/29/21	2:51 PM
6/29/2021	2:40 PM	Stacy Snyder	8125 Duluth Street	(219) 669-7336	Pot Hole	sm	Resident said there are about 4 pot holes in the street at the corner of Duluth Street and Grace Place Kevin will take care of this	Street	y	AK	6/30/21	1:28 PM
6/30/2021	8:20 AM	Nancy Kraus	2036 Northwood Lane	(219) 924-8639	Branches Missed	sm	Resident called and said her branch was missed last week. Can we please pick it up Grant will get them	Street				
6/30/2021	9:35 AM	Jim Ryerse	2517 Wicker Ave	(219) 838-4208	Dead Tree/Status?	kw	Resident believes the tree is dead and would like it removed. Tree is dead Brian will add to Dave's list	tim	y	MK	7/2/21	
6/30/2021	12:44 PM	Rebecca Jacyna	3307 George Street	(219) 689-2932	Dead Tree/Status?	sm	Resident said her tree is dead and would like it removed Tree is dead Brian will add to Dave's list	Tim	Y	MK	7/2/21	
6/30/2021	12:44 PM	Rebecca Jacyna	3307 George Street	(219) 689-2932	Sidewalk/Curb Issue	sm	Resident would like to talk to someone about the Sidewalk Replacement Program..Talked to resident.	Street	y	bkb		
7/1/2021	11:32 AM		Ridge Rd and 2nd Street		Tree/Branch Issues	kw	Branches are blocking the traffic signal Told Jeffery	Street				
7/1/2021	1:12 PM	Michelle	3138 Condit Street	(708) 205-9467	Other: See Notes	sm	Resident said we paved her alley and now when it rains she has a huge puddle because the alley is not level. She would like someone to come out and check because she wants it fixed Please advise resident of what will be done..Talked to resident ansd told her we would grade the alley.	Street	y	bkb		
7/1/2021	3:22 PM	Scott	2437 Walnut Dr	(219) 313-6138	Drainage Issues	kw	Yard is flooded, coming from a back manhole in the easement. Working on it now.	WT/SW		AK		
7/2/2021	8:56 AM	Ryan Kovacik	3017 Lakeside Dr	(219) 895-1129	Locate Lines/B-box	kw	New resident wants to know where the bbox is located in case of emergency. Please locate Paul located it	wt/sw	Y	AK	7/2/21	10:44 AM
7/6/2021	8:56 AM	Hal	8719-21 Kennedy Ave	(312) 813-9584	Locate Lines/B-box	kw	Paul is locating the bbox for a schedule shut off at 8 am tomorrow morning	WT/SW				
7/7/2021	10:23 AM	Sharon Molodet	2017 Wildwood	(219) 924-8925	Sink Hole	sm	Resident said there is a sinkhole by the sewer by the pond behind the house in the easement. Resident wants someone to come out and fix the sinkhole so no one gets hurt. Please call Sharon at 219-924-8925 to advise.. repaired	WT/SW	y	bkb	7/14/21	2:24 PM
7/7/2021	11:45 AM	Nora Mackey	2816 Eder Street	(219) 588-2716	Tree/Branch Issues	sm	Resident called and said a tree in the parkway has a broken branch hanging straight down and would like someone to remove it. She said she talked to someone in the chipper and he told her he would talk to someone to see if they can remove it…Sean took care of it.	Street	y	bkb	1/0/00	
7/7/2021	1:46 PM	Candy Anderson	2711 Clough	(219) 741-0314	Drainage Issues	kw	Has sanitary sewer backup in basement, please check main. Had a plumber…Sent Jimmy and Joe. This is in the private line, mains are clear	WT/SW	y	bkb		
7/7/2021	1:47 PM	Mark Lambert	3109 Strong	(219) 577-3718	Branches Missed	sm	Resident said his branches were missed and would like them picked up..Jeff will get the 2 twigs.	Street	y	bkb		
7/7/2021	2:15 PM	Alyssa Vinmar	3138 Garfield Avenue	(219) 378-0118	Tree/Branch Issues	sm	Resident said there is a branch in the middle of the street. She thinks it fell off a landscaping truck. Can someone please come and pick it up.. Done.	Street	y	bkb		
7/7/2021	2:43 PM	Joshua Lucas	Highway Avenue	(219) 798-7117	Street Light Out	sm	Resident said the street light is out at the corner of Highway Avenue and Cottage Grove. He wants to know if it can be fixed.Yes by calling Nipsco…But I will contact them.	Street	y	bkb		
7/9/2021	9:00 AM	Joann	2405 River Drive	(219) 838-8440	Other: See Notes	sm	Resident called and said the grass in the levy has not been cut for a while and it looks bad. She said they pay taxes and expect it to be cut Mike Pipta is calling Dan Repay to let him know	Street	y	sm	7/9/21	
7/9/2021	11:20 AM	Bill Cameon	9841 Kennedy Avenue	(219) 689-2603	Branches Missed	sm	Resident said his branches were missed for pick up..Dylan will get them.	Street	y	bkb		
7/9/2021	1:30 PM	Hershal Talkington	3120 Farmer Drive	(219) 512-0100	Other: See Notes	sm	Resident said the storm drain has water in it that's not going down. Jimmy went there , He advised the resident that it is his responsibility because the main sump pump going to the storm is collapsed	WT/SW				
7/9/2021	3:24 PM	Denise Comcepcion	8410 Kennedy Avenue	(219) 671-7338	Branches Missed	sm	Resident has branches to be picked up but she doesn't have a parkway so the branches are in the alley..She most certainly does have a parkway ,its on Kennedy Ave.	Street	y	bkb		
7/12/2021	9:00 AM	John Jansen	2633 Wicker Ave	(219) 923-9148	Pot Hole	sm	Resident said the alley behind his housr has a lot of pot holes that need to be fixed..I'll to the alley grading list.	Street	y	bkb		
7/12/2021	10:30 AM	Julie Hancin	8724 Prairie Avenue	(219) 765-1725	Tree/Branch Issues	sm	Resident said there is a mulbeery tree in the alley that is grown over and hanging over in the residents yard and berries are everywhere. She has to have her dog on a leash in their fenced in yard because she doesn't want her dog eating the berries. Can someone come out and trim the tree...There is no such alley here but an easment, and we don't maintain trees in easement or go on private property.	Street	y	bkb		
7/12/2021	3:20 PM	Joann	2405 River Drive	(219) 838-8440	Other: See Notes	sm	Resident called and said the weeds around the entrance sign to Wicker Park Manor are really bad and could someone please come and weed whack.. We will get it the next chance we have.	Street	y	bkb		

7/13/2021	11:41 AM	Ken Bodamer	9410 Saric Drive	(219) 688-8346	Sidewalk/Curb Issue	sm	Resident is wanting to replace his sidewalk and would like information on the Sidewalk Replacement Program..Taken care of.	Street	y	bkb		
7/14/2021	8:02 AM	Angela LaRock	2453 Lincoln Street	(708) 954-0258	Branches Missed	sm	Resident called and said her branches were missed on her Tuesday pick up day..These are bushes and it's a loader stop.	Street	y	bkb		
7/14/2021	9:07 AM	resident	Highway Avenue		Dead Animal	sm	10-45 on Highway Avenue by Liable Road {large animal}..Picked up.	Street	y	bkb		
7/14/2021	10:07 AM	Julie Poremba	3010 43rd Street	(219) 513-6951	Sidewalk/Curb Issue	sm	Resident said her sidewalk is raised where we took her tree out. She wants to know if we can fix the sidewalk because this happened from the tree. Please advise resident..No, I have given her a concrete estinate twice for the sidewalk, the tree that was there caused the sidewalk to raise.	Street	y	bkb		
7/14/2021	10:10 AM	Julie Poremba	3010 43rd Street	(219) 513-6951	Pot Hole	sm	Resident said there are several potholes and would like the street to be replaced because they just stopped where we replaced the new street about 50 ft from all the pot holes Please advise resident..Have already explained how the paving works, when I gave her the concrete estimate.That segment of road is not on this years paving list, i told her before i would try and patch the spot in front of her house when or if we get time.	Street	y	bkb		
7/14/2021	10:20 AM	Julie Poremba	3010 43rd Street	(219) 513-6951	Other: See Notes	sm	Resident would like her tree replaced from the one that we removed She wants the town to replace the tree Please advise resident.We removed her tree in 2019 and replaced it with another tree, if she looks out her front door its planted in the parkway next to the one we removed.	Tim	y	bkb		
7/14/2021	11:12 AM	Kylee McLellan	8737 Prairie		Branches Missed	sm	Resident called and said she got her branches out a little late yesterday and they were missed. Could we please pick them up..Will try and get them sometime this week as long as they have the time.	Street	y	bkb		
7/15/2021	9:00 AM		George Street and Forrest		Other: See Notes	sm	Resident called and said a safety cone is to far out in the intersection and is blocking cars to be able to turn at the intersection of George Street and Forrest Resident said the cone has been there a few days now..Yes it is, because it is covering a sink hole in the road and the water/sewer department is awhere of it...Sean and Dennis will replace the cone with a verticade.	Street	y	bkb		
7/15/2021	9:44 AM	Daryl Jones	2727 Martha	(219) 924-0014	Branches Missed	sm	Resident said their branches have not been picked up for 4 weeks and could someone please come and pick them up..probably because thet had thwe road closed due to the water main project that is being done...I will pass it on to the chipper crew.Dylan will get them today.	Street	y	bkb		
7/15/2021	10:24 AM	Katherine Harvin	2440 Martha Streer	(219) 359-8040	Drainage Issues	sm	Resident would like someone to come out and check the drains because she has had all her pipes snaked out in her house and the water is still taking forever to drain and she thinks it might be our drains. Please call resident to advise because her house is in quarantine right now and she can't come out and talk. Checked and called her, this is not our issue	WT/SW	Y	AK	7/15/21	2:10 PM
7/15/2021	10:35 AM	Albert Lopez	9301 Liable Rd	(219) 924-6313	Locate Lines/B-box	kw	Locate Bbox. If possible they would like to be able to call tomorrow morning for shutoff to repair the inside valve. They were instructed to call prior to 2 pm to have it turned back on. Cannot find box, spoje with resident and will be callingin locates to install a box hopefully next week.	WT/SW	Y	AK	7/15/21	2:11 PM
7/15/2021	11:51 AM	Ryne Pishkur	2040 45th Street	(219) 864-0200	Drainage Issues	sm	Company owner called and said the storm drains are not draining correctly at 2040 45th street and 2160 45th street. He would like someone to come out and see what the problem is These are private lines, we checked and spoke with the owner	WT/SW	Y	AK	7/15/21	2:12 PM
7/15/2021	12:50 PM	Slyvia Galic	3723 44th Street	(773) 406-3870	Sidewalk/Curb Issue	sm	Resident recently replaced the apron of the driveway and is concerned because the street curb is cracked up and is afraid that water will be leaking under the curb Please advise resident of what will be done	Street				
7/15/2021	1:06 PM	Antonia Castillio	8925 Highland St	(708) 271-2329	Tree/Branch Issues	kw	Resident believes the small tree in the parkway is dead. Check and advise. Tree is dead, talked to resident and told we would remove it today.	Tim	y	bkb		
7/16/2021	9:21 AM	Joshua Frayer	8934 Ohio Place	(219) 741-1439	Dead Animal	sm	10-45 on the sidewalk in front of their house..Will give to Sean	Street	y	bkb		
7/16/2021	9:30 AM	Ray Haack	9947 Delaware Place		Other: See Notes	sm	Ray called to say THANK YOU to the public works for picking up his logs. He said the guys did a GREAT JOB! ..Yes we do rock!!	Street	y	bkb		
7/16/2021	10:10 AM	Theresa Sanchez	2906 Franklin Street	(219) 256-9673	Dead Animal	sm	10-45 on the street it is a bat..Will give to Sean.	Street	y	bkb		
7/16/2021	10:30 AM	Robert Abraham	10043 4th Street	(219) 924-0524	Branches Missed	sm	Branches were missed for yesterdays pick up..Dylan will grab them today.	Street	y	bkb		
7/16/2021	12:07 PM	Hector Trevino	9743 Kennedy Avenue	(219) 314-7460	Sidewalk/Curb Issue	sm	Resident would like to kmow if they can get their curb repaired. The curb by the mailbox is all chipped away. Please advise resident	Street				
7/16/2021	2:59 PM	John	9205 Woodward Avenue	(219) 923-9336	Branches Missed	sm	Resident called and said his branches were missed today..Jeff and Dennis will get them today.	Street	y	bkb		
7/19/2021	8:44 AM	Shelby - PD	3100 block of Glenwood		Dead Animal	sm	10-45 at the 3100 block of Glenwood..Gave to Jeff	Street	y	bkb		
7/19/2021	8:52 AM	Misty Bell	8247 Sycamore	(219) 808-2891	Other: See Notes	sm	Resident called wanting to know why the grass has not been cut on the corner by her house. She said the town used to cut there and stopped. I told her I would find out if it was public works I called resident back and told her it was the parks dept that cuts that area and gave her the phone number	Street	Y	sm		
7/19/2021	9:00 AM		3433 Ross Place		Branches Missed	sm	Resident called and said her branches are usually missed and wanted to make sure that they are picked up today..Ok	Street	y	bkb		
	10:04 AM		3307 George Street		Other: See Notes	sm	Resident called to let us know that she has a lot of branches on her parkway for pick up on Thursday..Ok	Street	y	bkb		
7/19/2021	10:15 AM	Jill Johnson	9026 Orchard Drive	(219) 689-5553	Drainage Issues	sm	Resident has some standing water in the garage {its not a lot} and not sure where it is coming from. They dry it up and it always returns. She would like someone to come out to check where the problem is Please advise when we can go out Kyle checked, no chlorine (this is ground water)	WT/SW	y	kw		
7/19/2021	10:30 AM	Carol Poracky	2153 Ridgewood Street	(219) 775-5681	Water Pressure	sm	Resident said she has no water pressure to have the irrigation pump work. She would like someone to come out Tuesday July 20th to check. She is home all day. Please advise resident Kyle checked the bbox, it is fully open will call resident to let her know	WT/SW	y	kw		
7/19/2021	10:41 AM	Allison	2936 Strong Street		Dead Animal	sm	10-45 on the street by a truck..Gave to Jeff	Street	y	bkb		
7/19/2021	11:09 AM	Regan Colglazier	3533 Franklin Street	(219) 381-6633	Branches Missed	sm	Resident said her branches were missed today She saw the chipper go by at the end of her street	Street	y	bkb		
7/19/2021	11:10 AM	Terez Sisak	2836 Eder Street	(219) 895-0393	Other: See Notes	sm	Resident said her neighbor keeps parking her car right by her driveway making it very difficult to back out of her driveway. The police were called there and advised resident to contact public works to see if we can put something where the neighbor should be parking. I also transferred her to code enforcement for other issues ..Its a public street, nothing we can do.	Street	y	bkb		
7/19/2021	1:50 PM	Lance Ryskamp	Town Hall		Other: See Notes	sm	Lance called and asked if we could come and replace some bulbs in the back stairwell of Town Hall on the north side of the building. He said it is very dingy in there..Jeff will take care of it.	Street	y	bkb		
7/20/2021	8:22 AM	Patty Steven	3903 Jewett	(219) 455-8237	Branches Missed	sm	Resident said her branches were missed yesterday for their pick up..Gave to Grant	Street	y	bkb		
7/20/2021	8:38 AM	Roger Mullins	3417 Grand Blvd	(219) 616-6891	Branches Missed	sm	Resident said his branches were missed Monday on his pick up day..Gave to Grant	Street	y	bkb		
20-Jul	8:51 AM		2019-2025 Main St		Other: See Notes	kw	Ditch is full of weeds and garbage..Will try and get it later this week.	Street	y	bkb		
20-Jul	9:20 AM	Lynn Segel	8831 Kleinman Road	(815) 919-6909	Dead Tree/Status?	sm	Resident said her tree is infested with termites Please advise resident Tree will be added to Dave's list	Tim	y	kw		
7/20/2021	9:53 AM	Betty Hyflop	8124 Sycamore	219-838-0735	Dead Tree/Status?	sm	Resident said her tree is infested with bugs and wants someone to come out to check and advise..Trees looked ok to me.	Tim	y	bkb		
7/20/2021	10:30 AM	Arlene Dickerson	3219 Highway Avenue	(574) 528-1133	Drainage Issues	sm	Everytime it rains there are ruts that have standing water. Can the alley be graded?..They are already working in that alley.	Street	y	bkb		
7/20/2021	3:00 PM	Rich Garza	3115 Ridge Road	(219) 313-7319	Branches Missed	sm	Resident called and said he has branches out and kids keep going by and kicking them towards Ridge Road. He is worried because of the cars going down Ridge He wants to know if we can pick them up. Been by this address several times today and branches have not moved, this is Mondays Route.	Street	y	bkb		
7/20/2021	3:15 PM	Faith Dyer	2229 41st Street	(219) 238-9047	Locate Lines/B-box	sm	Resident wants to know if we can come out Wednesday 7/21/2021 morning to let her know where the sewer connection is located. Please advise resident what time Dan marked and spoke with the gentleman doing the work	WT/SW	Y	AK	7/21/21	6:19 AM
7/23/2021	9:15 AM	Jerry Cadwalader	9746 Georgetowne	(219) 924-9746	Pot Hole	sm	Resident called and said there is a big pot hole that is about 2 feet west of the bike path on 45th Street. He would like someone to come out and fill it. Taken care of.	Street	y	bkb		
7/26/2021	1:15 PM	Mary Simons	2642 Clough Avenue	(219) 237-6252	Sidewalk/Curb Issue	sm	Resident would like information on the Sidewalk Replacement Program. She has 2 squares that need to be replaced...Talked to resident.	Street	y	bkb		
7/26/2021	3:21 PM	Jim Luwis	8131 E 4th Pl	(219) 789-5253	Locate Lines/B-box	kw	Resident has inside valve dripping and needs the bbox located. He believes they have tried to find it in the past with no luck. He will have to call a plumber to fix the inside valve that has a constant drip so please prioritize this one. Thank you Curb stop installed	WT/SW	Y	AK	7/27/21	11:42 AM
7/27/2021	10:57 AM		east on Duluth right before Grace		Pot Hole	sm	Resident called and said there is a big pot hole if you are going east on Duluth right before Grace. Dangerous for motorcycles per resident..Will add to the list.	Street	y	bkb		
7/28/2021	9:50 AM	Jack Vander-guissen	8946 Highland Street	(219) 806-0248	Sidewalk/Curb Issue	sm	Resident would like to talk to someone about replacing his curb..Talked to resident.	Street	y	bkb		
7/28/2021	10:14 AM	Mike Giordana	2815 Norman	(219) 801-5781	Other: See Notes	sm	Resident would like someone to come out to check the alley, he said it really needs to be repaved by his house. Please advise..I will look at it but we are not paving alleys at this time, paving money is used on streets. Looks like Nipsco worked in the alley.	Street	y	bkb		
7/28/2021	10:15 AM	Sandy Navarro	9020 O'Day Drive	(219) 201-7792	Other: See Notes	sm	Resident said the grass behind her house on the bike path {by the water} is not being cut and could we please cut it..Park Department does this.	Street	y	bkb		
7/28/2021	2:43 PM	Michael Maloney	9426 Hook Street	(219) 712-7700	Dead Tree/Status?	sm	Resident had a tree planted in his parkway last year with the tree program and is laying on its side. The resident would like it removed and replaced by the town if possible. Please advise resident..Taken care of, will add her to the list of tree planting.	Tim	y	bkb		
7/28/2021	2:51 PM	Ty Savant	9340 Cline Avenue	(219) 805-4989	Branches Missed	sm	Resident called and said branches were missed today. Some of it could be a loader stop..Picked up, plus a loader stop.	Street	y	bkb		
7/29/2021	7:36 AM	Myriam Pineda	9045 Ohio Place	(219) 433-9208	Tree/Branch Issues	sm	Resident called and said there is a tree down at the corner of Ohio and Wirth..Taken care of.	Street	y	bkb		

7/29/2021	7:40 AM	Nancy Elo		(219) 501-2070	Pot Hole	sm	Resident said there are pot holes on the 9100 and 9200 block of Woodward and could we please fix them..Sean will get them.	Street	y	bkb		
7/29/2021	8:10 AM		45th Steet and 5th Street		Other: See Notes	sm	Resident called and said there is a bag of compost on 45th street by 5th street going all over. Could we also send the sweeper.All good.	Street	y	bkb		
7/29/2021	9:40 AM	Arthur Gross	3140 Highway Avenue	(219) 218-8475	Other: See Notes	sm	Resident called and said his alley was graded but there is a low spot behind his house and wants to know if it can be fixed because when it rains he gets a big puddle .I'll look at it, but we already did this alley and we are not running back or thru every alley after it rains, its an alley, hard to keep them perfectly smooth at all times.	Street	y	bkb		
7/29/2021	10:20 AM		9308 Erie	(515) 822-7513	Branches Missed	sm	Resident called and said he is just putting his branches out and could we please pick them up.Taken care of.	Street	y	bkb		
7/29/2021	10:41 AM	Jennifer Austin	3332 Farmer Drive	(219) 743-7222	Dead Tree/Status?	sm	Resident called and said one tree in the parkway is dead and she thinks the other one is dying. Please advise resident..Talked to resident and marked trees for removal.	Tim	y	bkb		
8/2/2021	12:28 PM		2600 Block of Wicker		Pot Hole	kw	Reporting bad pot holes in the alley...Ok	Street	y	bkb		
8/2/2021	1:48 PM	Tim Adkins	3707 42nd Drive	(219) 922-1560	Sidewalk/Curb Issue	sm	Resident said the apron has sunk and there is a big hump at the end by the curb.. When it rains the water doesn't drain. The resident would like someone to come out and look at the problem. Please advise resident Dan chekced, sewer is OK,..after further inspection of the manhole/casting in drive, found it is not sealed and leaking,manhole/casting will be repaired and will replace drive apron and curb,talked to and informed resident.	Street	y	bkb		
8/2/2021	2:09 PM	Jim Knight	2721 Martha Street	(219) 789-9610	Branches Missed	sm	resident called and said the branches were missed last week..We will get them this week, im sure the constuction going on was an issue for the Chipper.	Street	y	bkb		
8/2/2021	8:57 AM		9512 Hook Street		Pot Hole	sm	Resident said there is a pot hole at the northeast corner of Gordon and 45th Street..Ok	Street	y	bkb		
8/4/2021	12:00 PM	Charissa Voorhis	9006 Hook Street	(765) 507-1034	Pot Hole	sm	Resident called because there is a cone in ffront of her driveway covering a pot hole and wants to know when the pot hole will be fixed..This in the middle of the street where the asphalt is sinking above the sewer, I believe this sewer work needs to be contracted out, will talk to Aaron we he comes to work on Thursday.	WT/SW	y	bkb		
8/4/2021	12:05 PM	Allison Zuniga	9440 Hook Street	(708) 460-3500	Other: See Notes	sm	Resident had a sink hole by her sidewalk and we filled it in but now she is saying we covered the sprinkler head system and wants it corrected Sending Dan to look for the head. Found and uncovered	WT/SW	Y	AK	8/6/21	7:34 AM
8/4/2021	4:04 AM	ray karulski	9125 prairie avenue	(708) 705-1971	Sidewalk/Curb Issue	sm	resident would like information on the sidewalk replacement program	Street	y	bkb		
8/5/2021	8:20 AM	Kevin Clark	2048 Ridge Road	(219) 746-6034	Other: See Notes	sm	Resident called because we are doing a locate in front of his neighbors house at 2054 Ridge Road and he wants to know what is going and how long. 811 ticket says replace sewer casting Please advise resident..Replacing the sewer casting out on Ridge Road in front of 2054 Ridge Road, has nothing to do with 2048 Ridge Road.	WT/SW	y	bkb		
8/5/2021	8:30 AM	Bill Berry	Jewett Avenue	(219) 359-6044	Other: See Notes	sm	Resident said we were in the alley putting stone down and breaking up concrete yesterday, he was leaving from his house down the alley and heard a strange noice, he ran over a wire mesh from the concrete and it punctured his tire. He wants to know if there is any recourse from Highland to get his tire fixed. Please advise resident..Talked to resident, advised him we weren't reimbursing his tire, wantes to talk to Mark next, advised him to call back and talk to Mark.	Street	y	bkb		
8/5/2021	10:07 AM	Antonio Gonzalez	9625 5th Place	(815) 600-6873	Sidewalk/Curb Issue	sm	Resident said the tree in the parkway is lifting the sidewalk up and would like it fixed. Can someone please come out and advise resident	Street	y	bkb		
8/5/2021	10:29 AM	Marion Lee	8304 Liable	(219) 838-5052	Branches Missed	sm	resident said his branches were missed on pick up day..Dylan will get them today.	Street	y	bkb		
8/5/2021	12:02 PM	John Mason	10128 Prairie Ave	(630) 258-2374	Valve Issues	kw	Has no water coming out of 2 outside spigots checked every where for a valve with no luck. Resident is wondering if there is a second shutoff outside. Kyle checked and assisted the resident, alls well.	WT/SW	y	bkb		
8/5/2021	1:47 PM	Trinity McCormick	8205 Wicker Park Drive	(219) 613-6464	Other: See Notes	sm	Resident said while the sewer work was being done on wicker park drive someone from the town or a contractor from the town took down their fence and gate. They put the fence back up but put the gate up at the neighbors house just south of them. Resident will call back with exact address where their gate was put. Resident would like the gate to be put back up at 8205 Wicker Park Drive Please advise resident That was grimmer. Gave this to Derek, the gate was definitely replaced on 8213 Wicker Park Dr(didn't have a previous gate) instead of 8205 Wicker Park Dr	WT/SW	Y	AK	8/6/21	2:30 PM
8/6/2021	8:10 AM	Gaju Patel	2054 Ramblewood	(574) 514-7618	Drainage Issues	sm	Resident said when it rains his backyard floods and the basement gets water. He would like someone to come and check to see if there is a problem with the drains. Please advise resident Yards are graded poorly. Resident was advised	WT/SW	Y	AK	8/6/21	12:05 PM
8/6/2021	9:37 AM	Julianna	8720 Carolina Ave	(815) 546-5721	Branches Missed	kw	Called last Tuesday for branch pickup and was told her pickup day is Wednesdays (she doesn't leave them out because she doesn't want any problems with neighbors), she is on the north side of Ridge Rd and should be every Monday. Can we get them today? If not let me know and I will tell her to put them back out Sunday night for Monday's pickup...Told Dylan to grab them today.	Street	y	bkb		
8/6/2021	12:31 PM	Harvey Crouch	9132 Cline Ave	(219) 808-6620	Locate Lines/B-box	sm	Resident had a plumber out to do some work and told resident that he needs a locate on his sewer line Please advise resident Located and marked	WT/SW	Y	AK	8/6/21	2:29 PM
8/6/2021	12:42 PM	Joann Franczek	9204 Grace Street	(219) 629-0815	Dead Tree/Status?	sm	Resident said both her trees in the parkway are dead. Please check and advise. Talked to resident, trees are dead, marked and added to Daves list.	Tim	y	bkb		
8/6/2021	1:17 AM	Ed Manly	3107 98th Street	(847) 489-5421	Other: See Notes	sm	Resident called and wants to talk to someone about the quality of water. His water filters are getting dirty fast and then he gets low water pressure. He has to change filters every 1 1/2 months because it is so bad. He would like a call back about this problem.	WT/SW				
8/6/2021	4:08 AM	Susan Alonzo	3639 44th Street	(219) 218-2884	Drainage Issues	sm	Resident said the storm drain is clogged. She would like someone to come out and check Jimmy will jet it today	WT/SW	Y	AK	8/9/21	1:19 PM
8/9/2021	8:10 AM	Patricia McCullough	3711 Manor Drive	(219) 924-7370	Other: See Notes	sm	Resident called because her water was cloudy in her sink and toilet and has a yellowish tint to it. She wants someone to come out and check her water to make sure it is ok. Please advise resident before going to her house Checked and advised	WT/SW	Y	AK	8/9/21	1:56 PM
8/9/2021	10:00 AM	Chris - Matrix	2229 41st Street	(219) 789-2241	Other: See Notes	sm	Chris said we did a locate for the sewer there and he is down 7 ft and still can't find it. He needs someone to come there and locate the sewer. Dan showed them where it was	WT/SW	Y	AK	8/9/21	1:10 PM
8/9/2021	10:35 AM	Jim Highland Body Shop	2611 Garfield	(219) 972-3441	Water On/Off Req.	sm	Resident called and needs the water shut off because of work being done there Kyle is going now	WT/SW	y	AK	8/9/21	1:17 PM
8/9/2021	10:40 AM	Jennifer Austin	3332 Farmer Drive	(219) 743-7222	Dead Tree/Status?	SM	Resident called because we removed a dead tree in the parkway but we left the stump. She wants to know when we are going to remove it Please advise resident..Will talk to her again and explain about the stump removal as well as the other tree that Dave is going to take down as well.	Tim	y	bkb		
8/9/2021	10:59 AM	Julie Poremba	3010 43rd Street	(219) 513-6951	Sidewalk/Curb Issue	sm	Resident said her sidewalk is raised and wants to have it replaced. She was told that we would replace it free because her friend did not have to pay for it In the same conversation she told me that Mark said we could replace it but she would be responsible Please advise resident..See note from the last time she called.	Street	y	bkb		
8/9/2021	11:00 AM	Julie Poremba	3010 43rd Street	(219) 513-6951	Pot Hole	sm	Resident said there are pot holes in the street and wants to know when they are going to be fixed Please advise resident..When we have the time and are hot patching again.	Street	y	bkb		
8/9/2021	12:30 PM	Teresa Pecsek	9428 O'Day Drive	(219) 924-6007	Other: See Notes	sm	Resident said there is a strange odor in the water. It smelles like its coming out of a rubber water hose Please advise resident Brett checked and couldn't find anything wrong Advised resident to keep an eye on it and call while it is happenign if they can	WT/SW	y	AK	8/9/21	1:18 PM
8/9/2021	3:40 PM	Tim Doe	2904 West 4th place	(219) 616-6651	Dead Tree/Status?	sm	Resident said Russell Tree Service was supposed to cut his tree down in his parkway because we marked it for removal but they never showed up to do it. He would still like it removed if someone could come to check and advise...Tree fell in storm stump has been added to Daves List.	Tim	y	bkb		
8/11/2021	12:39 PM	david Sendekas	10050 5th Street	(219) 688-9484	Other: See Notes	sm	Resident said the tree in the parkway has a branch hanging over in the street from the storm and could we come and cut it before it falls. He tried to cut the branch himself but couldn't reach it...Jeff will get it.	Street	y	bkb		
8/11/2021	8:21 AM	Craig Kolin	8416 5th Place	(708) 772-9565	Other: See Notes	sm	Resident has a 15 ft branch that fell from the storm last night. He wants to know if someone can please come and pick it up...Yes on Monday.	Street	y	bkb		
8/11/2021	10:49 AM	Tim Doe	2904 West 4th place	(219) 616-6651	Other: See Notes	sm	Tim called and said the wind knocked the tree down from the parkway and its laying in the yard also by the neighbors. He wants to know if we can come and get it. He called yesterday and it is in the call log. Please advise resident..Sent Sean to check, the call log says he had a tree set up for removal by Russels but was never done, nothing about a tree down in the parkway until today.	Street	y	bkb		
8/11/2021	11:22 AM	Jim Szubryt	9502 Forrest Drive	(219) 924-2271	Other: See Notes	sm	Resident called and said a branch fell from the tree in the parkwary and it is in the street..Sent Kevin and Tim.	Street	y	bkb		
8/11/2021	11:50 AM	Frank Jimenez	9117 Woodward	(773) 316-8441	Other: See Notes	sm	Resident said the neighbor put branches out but put them in the street instead of the parkway and it is affecting the traffic on the street..ok, they will be picked up today.	Street	y	bkb		
8/11/2021	12:03 PM	Scott Grenchik	9336 Kleinman	(219) 323-9523	Other: See Notes	sm	Resident called because he has water coming in his basement but no standing water in the yard. He would like someone to come out and check the storm drains Please advise resident...Jimmy is going over there, our sewer is fine, nobody was home. Going to have Dan camera the line and check the tap, this is Sanitary	WT/SW	y	bkb		
8/11/2021	1:04 PM	Chanel Butler	3547 41st Street	(623) 208-2954	Sidewalk/Curb Issue	sm	Resident would like to talk to someone about the Sidewalk Replacement Program....Called resident & left a message.	Street	y	bkb		
8/11/2021	1:36 PM	Helen Williams	8008/8012/8016 Kennedy	(219) 838-1331	Locate Lines/B-box	sm	Resident would like her sewer lines located. She wants to know if they are in the front of her business or the back. She will be there for another hour today and all day today. Please advise resident Kyle checked the main and gave Helen a list of plumber's, she currently has Roto Rooter	WT/SW	y	kw		

8/12/2021	8:45 AM		9139 Woodward Ave		Other: See Notes	sm	Resident wants to know if the street sweeper can come down Woodward Ave, Born Ave, and Prairie today. He said there are a lot of leaves in the street from the storm..Lou is already in the Meadows today and will check it out.	Street	y	bkb		
8/12/2021	9:20 AM	Noel Ledesma	3311 Garfield	(708) 668-3700	Dead Tree/Status?	sm	Resident lives on a corner lot - the tree in the parkway on Garfield is dead and the tree in the parkway on Cottage Grove is also dead. Please check and advise. Both trees are dead, notified resident we will remove both of these ourselves.	Tim	y	bkb		
8/12/2021	10:08 AM	Angela Xidias	9455 Parkway Drive	(219) 924-4150	Dead Tree/Status?	sm	Resident said they have 1 tree dead and another that is dying from carpenter ants. Please check and advise resident was advised we would have the maple tree taken down and he needs to call back if the other tree gets worse	Tim	y	tjg	8/16/21	2:08pm
8/16/2021	9:47 AM	Family Speciality	3747 45th St		Branches Missed	kw	Called last week and was told the pickup day would be Wednesday, they have had them out since last Monday. Never picked up..Will make sure they get picked up this Wednesday.	Street	y	bkb		
8/16/2021	11:52 AM	Duke of Oil		(847) 946-3227	Sewer Backup	kw	Check the main. A plumber is out there now in the cleanout and said one of the manholes is completely filled with something. Not our issue, Jimmy spoke with the plumber and showed him where the actual manholes are located.	WT/SW	Y	AK	8/16/21	12:18 PM
8/16/2021	3:28 PM	Dieter Krause	2816 99th St	(219) 924-4557	Other: See Notes	kw	Resident wants to no if a "No Outlet" sign. People come out of Wendy's and end up turning around in his driveway all time..Jeff will install one.	Street	y			
8/16/2021	3:38 PM	Cynthia Fuqua	3850 Jewett Ave	(219) 487-8754	Dead Tree/Status?	kw	Resident has a dead ash tree in the front yard and wants to know if the town has any program for removing the ash trees?Can't remove on private property	mark				
8/17/2021	10:10 AM	Charlene Becze	3009 Grand Blvd	(219) 644-5187	Other: See Notes	kw	At&t hung new lines last week and tore up the front parkway with the vehicles.	mark	y	mk	8/19/21	
8/17/2021	10:26 AM	Steve Schindler	3520 41st St	(219) 588-9600	Dead Tree/Status?	kw	Resident says tree is infested with carpenter ants and is hollow on the inside. There is a hole in the tree where you can see the hollowness. Resident is a East Chicago Police Officer that works swing shift so please call and advise of findings. He also would like to get on the list for a new tree if this one gets removed tree has a hole in it which is hollow so we will remove it	Tim	y	tg	8/20/21	12pm
8/17/2021	3:22 PM	Jim Lewis	8131 E 4th Pl	(219) 789-5253	Restorations	kw	Put in new bbox a few weeks ago and resident is wondering when the restorations might happen. He was told to wait a little bit until it settles and he is saying it has settled about a foot thus far. Done	WT/SW	Y	AK	8/18/21	8:28 AM
8/18/2021	10:37 AM	Janice Ciucki	3234 Maple Drive	(219) 743-9707	Sidewalk/Curb Issue	sm	Resident would like information on the Sidewalk Replacement Program. Please leave a voicemail if she doesn't answer..Talked to resident	Street	y	bkb		
8/18/2021	1:12 PM	Mickey Borchert	3950 Juniper Trail	(219) 513-9601	Sign down/damaged	sm	Resident called because the sign NO PARKING ON THIS SIDE OF THE STREET at the corner is faded and would like a new sign put up. Also the paint on the curbs need to be repainted. Please advise resident..Sign will be replaced, but at this time yellow paint is not available, so that will have to wait until a later date.	Street	y	bkb		
8/18/2021	2:50 PM	Rachael Grunhard	corner of Johnston & Eder	(219) 902-1318	Sink Hole	sm	Resident called and said there is a sink hole by the storm drain at the corner of Johnston and Eder and would like someone to come out and look at it No apparent problem in pipe per Dan, possible backfill issue, filling and watching	WT/SW	Y	AK	8/19/21	10:53 AM
8/19/2021	7:42 AM		alley off of kennedy		Pot Hole	sm	Resident called to report several pot holes in the alley off of Kennedy (East Side) from Duluth to Grand Sent Pete	Street	Y	AK	8/19/21	10:52 AM
8/19/2021	11:58 AM		3332 Highway Ave		Branches Missed	sm	Resident called and said her branches were missed last Monday and wants to know if we can pick them up Yes, yes we can	Street	Y	AK	8/19/21	1:24 PM
8/19/2021	12:26 PM	Brent Woltzen	9351 Saric Drive	(219) 201-9320	Dead Tree/Status?	sm	Resident thinks his tree in the parkway is dead Please check and advise It is in bad shape he has been advised we will have it removed	Tim	y	tg	8/20/21	11:59am
8/19/2021	2:00 PM	Barbara Cowan	9044 Ohio Place	(219) 741-2488	Other: See Notes	sm	Resident called because we removed the apron of her driveway and put rocks down a couple of months ago, she wants to know when we will bw back out to fix it. Please advise resident I let the resident know sometime in October	WT/SW	Y	AK	8/20/21	8:35 AM
8/20/2021	8:00 AM	Maeve Gilholy	2540 Clough Ave	(773) 280-3151	Sewer Backup	sm	Resident has sewage backup in her basement. She wants someone to come over and check the sewer drain. Jimmy looked into this, not our issue	WT/SW	Y	AK	8/20/21	8:35 AM
8/20/2021	11:00 AM	Anthea Morgan	9411 Ellen	(219) 924-1813	Branches Missed	sm	Resident called and said her branches were missed for Thursday pickup. Dylan shall get them	Street	Y	AK	8/20/21	12:06 PM
8/23/2021	9:57 AM	Robert Santana	9337 Waymond	(219) 512-6639	Dead Tree/Status?	kw	2 small trees in front that resident believes are dead. Let him know. Thanks resident was advised that we would cut down the small both input tree in the parkway	Tim	y	tg	8/24/21	9am
8/24/2021	9:37 AM	Angela Grady	3527 42nd St	(317) 431-7801	Other: See Notes	kw	Wants a concrete replacement quote for the apron..Contacted resident and left message.	Street	y	bkb		
8/24/2021	9:45 AM	John-JAS Plumbing	8529 1st Street	(219) 308-4264	Other: See Notes	sm	Highalnd Auto Body is having JAS Plumbing do some work and they want to know if they can replace the meter to a 3/4 in Please advise if this is possible . Yes mush have licenced plumber. Needs building permit	Mark	y	mk	8/25/21	
8/24/2021	10:03 AM	Lisa Symns	3129 Lois Place	(219) 670-5312	Branches Missed	sm	Resident said her branches were missed last week Tim will get them today	Street	Y	AK	8/24/21	11:41 AM
8/24/2021	12:50 PM	Dirk -Fikema	9208 Waymond Ave		Other: See Notes	sm	Dirk needs someone to come out and do a Cap Inspection Kyle inspected, work is only halfway done. They will need a final inspection when they finish	WT/SW	Y	AK	8/24/21	1:23 PM
8/24/2021	2:53 PM	Ken - Lagestee Mulder Construction		708-878-3774	Other: See Notes	sm	Ken is doing a build out at Cardinal Campus and needs a water meter He woulk like to speak with Mark	Mark	y	mk	8/25/21	
8/25/2021	8:40 AM	Susan Foote	2829 37th Place	(219) 678-8889	Other: See Notes	sm	Susan said she has a sewage odor in her water and wants someone to come out and check the water. She has plumbing issues, mice crawling out of her toilet. The water is fine. Advised her to contact a plumber	WT/SW	Y	AK	8/25/21	12:00 PM
8/25/2021	11:40 AM	Nikia Adams	8345 Delaware Street	(708) 654-1260	Valve Issues	sm	Resident has a leak right under the water meter in her basement, she had a plumber out and they told her it was the towns responsibility to fix it. She wants someone to come out and check the problem Matt checked, meter is fine, it is the residents issue	WT/SW	y	AK	8/25/21	12:12 PM
8/25/2021	1:27 PM	Dean Petty	2503 Wicker Park Dr	(219) 333-0272	Other: See Notes	kw	He says he knows the sewer pipe is cracked by the sidewalk underneath the curb. He is getting back-up in his house. Calling Jimmy to check the main and Aaron you are the lucky one to call him back :) Thanks, He is just delightful.... He has been advised that this is his issue.	WT/SW	Y	AK	8/25/21	2:55 PM
8/25/2021	2:59 PM	Patty	9351 O"Day Drive	(219) 688-2892	Branches Missed	sm	Resident called because her branches were not picked up today. Can we pick them up Texted address to TIm	Street	Y	AK	8/27/2021	6:16 AM
8/26/2021	11:15 AM	Rob Smith	9236 Erie Street	(219) 808-9568	Locate Lines/B-box	sm	Resident needs the bbox located Kyle is going there Changed address from 8236 to 9236	WT/SW	Y	AK	8/27/2021	6:17 AM
8/26/2021	2:28 AM	Tarunbhai Patel	3106 Farmer Drive	(219) 321-3622	Other: See Notes	sm	resident would like information on the sidewalk replacement program - please advise resident..Talked to resident.	Street	y	bkb		
8/27/2021	9:35 AM	Wayne Ravesloot	2929 43rd Street	(219) 742-5249	Branches Missed	sm	branches missed on Thursday route, also has logs for loader stop Sean is picking them up this very moment	Street	Y	AK	8/27/21	10:46 AM
8/27/2021	12:30 PM	Robert Livingston	3537 43rd Street	(219) 741-6258	Pot Hole	sm	Resident said there is a big pot hole in the street by the curb please advise resident..Filled.	Street	y	bkb		
8/30/2021	9:22 AM	Lupe Almaraz	2646 Clough Avenue	(219) 972-0796	Other: See Notes	sm	Resident would like info on the Sidewalk Replacement Program Please advise resident..Talked to resident.	Street	y	bkb		
8/30/2021	11:00 AM	David Tokar	9021 Richard Street	(219) 781-7939	Other: See Notes	sm	Resident would like like information on the sidewalk replacement program - please advise resident	Street				
8/30/2021	11:15 AM	gabriel Martinez	3439 Martha Street	(219) 381-1441	Sewer Backup	sm	Reaident said he is having sewage backup and would like someone to come by to see what the problem is Televised and instiuform cut the tap out.	WT/SW	Y	AK	8/30/21	2:09 PM
8/30/2021	12:36 PM	James Smit	8925 Orchard Drive	(219) 730-9444	Branches Missed	sm	Branches missed on last weeks route..Will make sure they get picked up on this weeks route.	Street	y	bkb		
8/30/2021	1:27 PM	Sandra Strickland	2019 - 2025 Main Street	(219) 718-4175	Other: See Notes	sm	Resident said there are weeds in the ditch and rock that are very overgrown and wants someone to come out and take care of it..yes we will take care of it as soon as we can.	Street	y	bkb		
8/30/2021	2:53 PM	Marie Skrentiny	3248 Garfield	(219) 923-6945	Other: See Notes	sm	Resident had a big branch come down from the storm and we went and cleaned it up for her. She wants to know if we would recommend someone to take the rest of the tree down or if we could Please advise.. Residents tree, advised her on what to do.	Street	y	bkb		
8/31/2021	10:30 AM	Rosalee Faso	2129 Briarwood Circle	(219) 513-9920	Other: See Notes	sm	Resident said the curb (about 8ft) at Northwood and Briarwood Circle is all crumbled and wants to know if it can be replaced Please advise resident..Ill take a look at it.	Street	y	bkb		
9/1/2021	1:50 PM	resident	9210 Cottage Grove Avenue		Branches Missed	sm	branches missed on todays route..Branches not missed, this is a loader stop for Friday.	Street	y	bkb		
9/1/2021	2:44 PM	Henry Jawroski	2:48	(219) 924-5876	Other: See Notes	sm	Resident said the water is gray. I told them they were hydant testing Brett pulled samples from our station by there and everything looks OK.	WT/SW	Y	AK	9/2/21	6:26 AM
9/3/2021	10:15 AM	resident	3123 Garfield		Branches Missed	sm	branches missed on Mondays route..all good.	Street	y	bkb		
9/3/2021	12:46 PM	resident	Liable Road Bridge		Other: See Notes	sm	resident called and said the bridge on Liable Road by Southridge has a section of fence missing and was worried because kids walk past it everyday.Kevin will make repair.	Street	y	bkb		
9/3/2021	2:48 PM	John Stevenson	3028-3038 45th Street	(219) 864-8006	Other: See Notes	sm	Resident said there are 6 wheel stops from the town that were left there and he would like them picked up..Will get them this week.	Street	y	bkb		
9/7/2021	3:05 PM	katarina Sibova	8951 Lawndale	(219) 256-6783	Other: See Notes	sm	Resident ha a big branch hanging from the tree in the parkway and wants someone to come and cut the branch off. She is afraid someone is going to get hurt..Sean & Tim went to check it out...Daves Tree Service has been called to remove it.	Street	y	bkb		
9/8/2021	9:58 AM	Scott Kulinski	2920 Grand Blvd	(219) 545-4370	Dead Tree/Status?	sm	Resident thinks the tree in the parkway is dead, it also has a big branch hanging over the sidewalk that is low. Please check and advise I have looked at the tree ans while it is not in good condition it is not dead enough to qualify as dead under our 90 percent rule / will look at it again next week with mark to see if we can take them down anyhow because of proximity of school (not in their current state)	Tim	y	tg	9/13/21	
9/8/2021	10:07 AM	Vince Spataro	3128 100th Street	(219) 924-5558	Other: See Notes	sm	Resident said he heard a loud rush of air, went in the bathroom and water was splashing out of his toilet. He wants someone to come out to see what the problem is..Sewer lining company is working over there.	WT/SW	y	bkb	9/9/21	9:52 AM
9/8/2021	12:45 PM	Steven Foreman	3434 42nd Street	(219) 689-8258	Water Pressure	sm	Resident said the water pressure is low when he runs his sprinkler with no other water running anywhere in the house Please advise resident Kyle is going to check it out Kyle checked and it was a bad outdoor hose that was all kinked, all is well	WT/SW	y	kw	9/9/21	9:52 AM

9/8/2021	1:20 PM	Michelle Lyczak	3436 Laporte Street	(708) 768-4901	Other: See Notes	sm	Resident said water is leaking by the water meter in the basement and would like someone to check and advise. She is at work now until 4 Talked to her, I will have someone out tomorrow at 1:00 to check it. Kyle checked it was not the meter, she was given a list of plumbers to call	WT/SW	y	AK	9/10/2021	3:36 PM
9/8/2021	2:25 PM	Frank Krivach	9022 Hook Street	(219) 923-7689	Sink Hole	sm	Resident called because there are 2 orange cones over the sink hole and wants to know when it will be fixed. He said they have been there for a while…Called and left a message, it will be bid out starting this week. So hopefully not too much longer,.	Street	y	AK	9/9/21	9:51 AM
9/10/2021	2:48 AM	Carol Chanal	2234 Oakdale Street	(219) 923-5938	Other: See Notes	sm	Resident wants to know when you will start repaving Oakdale Street She asked if you could please call her with that info	Street				
9/13/2021	10:23 AM	Charles Zavesky	2207 Teakwood Circle	(219) 629-2114	Dead Tree/Status?	sm	Resident said the tree at the corner of Prairie and Cypress Lane is dead He is a volunteer for the DNR and wanted to report this tree is dead Jeff will cut it down	Tim	y	tg	9/14/21	
9/13/2021	11:40 AM	Cindy	9642 5th Pl	(219) 513-8076	Other: See Notes	kw	Insituform was out there a couple weeks ago and never put the lid back on the manhole. New neighbors with kids and she is afraid one of them will fall in. Sewer lid was closed but they left equiment in the yard, they will go get it.	WT/SW	Y	AK	9/13/21	12:01 PM
9/13/2021	2:23 PM	Kendall	8911 Branton	(630) 335-0666	Pot Hole	kw	Resident has bent two rims because of holes in the alleyway by Family Express. Requesting they be filled She would like a call back Dan and Bob cold patched the alley. I called and left a message with the resident. Perhaps we could cut and hot patch this at a later time?	Street	Y	AK	9/14/21	8:28 AM
9/13/2021	3:55 PM	Meredith Plopper	8434 Cottage Grove Place		Branches Missed	sm	Resident cut trees down after the chipper went by and she wanted you to know there are a lot of branches. She wanted to know if they could be picked up Gave to chipping crew, they will get to them when they can.	Street	Y	AK	9/14/21	8:36 AM
9/14/2021	8:35 AM	Gerald Chalko	3505 44th Street	(219) 924-0069	Other: See Notes	sm	Resident said there was a water main leaking in his yard and it was repaired and he wants to know when we are coming back out to fill in and seed. Please call resident with update Resident has been updated	WT/SW	Y	AK	9/14/21	8:52 AM
9/15/2021	12:00 AM	resident	Hart Rd West of Kennedy	(219) 208-9235	Other: See Notes	sm	Resident said the manhole cover just west of Kennedy Avenue on Hart Road is a couple of inches below the road surface. He wants to know if it can be fixed Locates have been called in and I contacted the resident to inform him that it will be taken care of soon.	WT/SW	Y	AK	9/16/21	2:54 PM
9/15/2021	11:32 AM	George Urbina	9641 5th Street	(219) 577-6585	Drainage Issues	sm	Resdent said everytime he uses water in his house he has some flooding in his basement. Can someone come out to check the drains to see if there is a problem. Instituform did not cut out the tap, they were informed and are dealing with the problem.	WT/SW	Y	AK	9/16/21	12:45 PM
9/16/2021	8:19 AM	David Barocio	3725 42nd Place	(219) 712-2111	Branches Missed	sm	Resident said his branches were missed on his Wednesday pickup Dillon will pick them up today	Street		tg	9/16/21	9:44am
9/17/2021	11:30 AM	Alex Neel	8151 Grace Street	(219) 951-6943	Water On/Off Req.	sm	Resident is having some work done and needs the water shut off Wednesday morning at 9:00am 9/22/2021 Kyle will check	WT/SW	Y	AK	9/27/21	10:46 AM
9/20/2021	8:48 AM	Jill O'neal	2708 38th Street	(219) 805-7937	Sewer Backup	sm	Resident said her and some neighbors are having sewaage backup in their basement . She said ever since the work that was done last week over there this started to happen. Resident would like to talk to someone about ths. Dan chekced, we saw no issues on our end. I talked to the resident.	WT/SW	Y	AK	9/20/21	1:01 PM
9/20/2021	1:37 PM	Alyssa Huff	2304 Ridge Road	(219) 263-9279	Water Pressure	sm	Resident said she has no water pressure from any of their faucets. This problem started Saturday 9/18/21 . Alyssa would like someone to come out to see what the problem is. Please advise resident Kyle will check It tomorrow morning Resident called and said her hot water heater went out and that is probably the problem	WT/SW	Y	AK	9/21/21	1:01 PM
9/20/2021	2:10 PM	Zach Krzekotowski	9006 Richard Street	(219) 402-4494	Sewer Backup	sm	Resident had some sewage backup and water seepage in his basement Please advise resident Our main line is fine, I called and spoke with him.	WT/SW	Y	AK	9/20/21	3:38 PM
9/20/2021	2:51 PM	James	3339 Franklin	(708) 372-6230	Branches Missed	sm	resident said his branches were missed.But the day is not over yet, will check it out tomorrow.	Street	y	bkb		
9/21/2021	10:55 AM	Lisa Symns	3129 Lois Place	(219) 670-5312	Dead Tree/Status?	sm	resident thinks both trees in the parkway are dead / please check and advise Jeff is going to cut down the east tree in the parkway the other is not dead enough	Tim	y	tg	9/22/21	
9/21/2021	1:56 PM	Trisha Keeton	8436 Liable Road	(219) 713-9562	Other: See Notes	sm	resident said the town was cutting concrete at her neighbors and never asked her to move her truck. She has concrete dust all her truck and wants someone to come out and look at her truck I called and spoke with her	WT/SW	Y	AK	9/21/21	2:07 PM
9/22/2021	12:41 PM	Ed Anderson	Bozak Auto Group	(219) 508-3974	Locate Lines/B-box	sm	Ed is going to have some plumbing work done and needs us to locate the sanitation manhole please call Ed to set up a time to go I set it up to head over there Friday at 10:00 and meet him to show him where his sewers are.	WT/SW	Y	AK	9/27/21	10:46 AM
9/23/2021	8:48 AM	Diane	9004 Woodward Ave	(219) 838-4161	Branches Missed	kw	Branches were missed last Friday. She is at a dead-end street and just wanted to make sure they are aware the branches are out there for tomorrow	Street	y	bkb		
9/23/2021	11:24 AM	gary Richardson	9424 Indianapolis Blvd	(219) 712-7194	Water Pressure	sm	Gary said the water pressure in his building is very bad and sometimes it just trickles out. He would like someone to come out and see what the problem is. Please advise resident Kyle showed them how to use their hose, now everything is just fine	WT/SW	Y	AK	9/23/21	1:09 PM
9/23/2021	12:55 PM	Kevin Wilson	9607 Boulevard Drive	(219) 934-0385	Other: See Notes	sm	Resident said the sidewalks and curbs are being replaced and he wants to make sure that his sprinkler system is not being damaged. He wants to talk to a supervisor about this	Street				
9/24/2021	10:28 AM	Leonard Czapla	3626 Boulevard Drive	(219) 781-5523	Pot Hole	sm	Resident wants to know if the pot holes on the street can be filled before winter. Please advise resident..Street is being paved this year.	Street	y	bkb		
9/27/2021	11:37 AM	Carol Aerts	2011 Main Street	(219) 730-4142	Branches Missed	sm	Resident said their branches were missed on Friday..These are by the water vault, we will get them sometime this week.	Street	y	bkb		
9/27/2021	3:42 PM	Linda Branson	2935 Ross	(219) 614-6099	Dead Tree/Status?	sm	Resident had a tree in the parkway that was removed and wants to know if we have a tree replacement program to replace the tree. She would like to talk to someone about this she is having a sugar maple planted through our tree program	Tim	y	tg	9/4/21	
9/28/2021	8:39 AM	Sylvia	2038 38th Street		Other: See Notes	sm	Sylvia from Highland Schools said their busses are hittng the tree branch that is hanging down in the street from the parkway. She wants to know if it can be cut down. Thank you..Kevin will get it today.	Street	y	bkb		
9/28/2021	12:28 PM	Martha Drake	3521 Highway Avenue	(219) 902-5250	Other: See Notes	sm	Resident said there is a hole with a metal insert on Johnston street from AT&t '3'2" long 15" wide 3' feet deep Her cat was trapped in this for 3 days before they found it. Resident said it is very dangerous and a child could get hurt. Resident is sending email to Brian with pictures Resident knows it is at&t she just wants it covered so no one gets hurt..This is an AT&T vault, it has 2 reflective cones covering the opening.Its not in the road its in th easement. Tried contacting AT&T but didnt get any type of response only the run around. A piece of plywood and cones were put over the metal insert.	Street	y	bkb		
9/29/2021	9:40 AM	Angelo Xidias	9455 Parkway Drive	(219) 924-4150	Dead Tree/Status?	sm	Resident has a tree that is marked to be cut down and just wants to know when. Please advise resident dave said by the end of week	Tim	y	tg	10/4/21	
9/28/2021	2:26 PM	Betty Turoci	8701 Osborne		Branches Missed	sm	Branches were missed on her pick up day..Will get them today	Street	y	bkb		
9/30/2021	11:19 AM	Tim Scheeringa	8917 Kleinman Avenue	(219) 616-1776	Other: See Notes	sm	Tim called because he wants the meter pulled at Hope Cemetary Kyle is pulling it today	WT/SW	y	kw	9/30/21	12:28 PM
10/1/2021	12:00 AM		Embassy Place		Water Pressure	kw	Embassy place is complaining of lowered water pressure throughout the properties. According to Mike we had a pump failure and are now running on 1 pump. They would like their pressure restored. Mike is turning on a different pump.	WT/SW	Y	AK	10/5/21	8:04 AM
10/4/2021	9:25 AM	Lora Kroslack	9615 Farmer Drive/2712 39th Place Wes	(219) 769-6420	Pot Hole	sm	Resident said there is a sink hole in front of her driveway. She also would like to have information for the sidewalk replacement program for 9615 Farmer and 2712 39th Place West Please advise resident..Talked to Resident.	Street	y	bkb		
10/4/2021	10:25 AM	Pam Zalewski	3904 Wirth Road	(219) 923-7011	Mailbox damaged	sm	Resident said her mailbox was damaged in the winter from the snowplow and no one ever replaced it. She said the mailbox is not going to make it through the winter and would like it replaced. Her address is not on the damaged mailbox list but she said she reported it.We are not replacing her mailbox.	Street	y	bkb		
10/4/2021	12:48 PM	Ryan	3733 Manor Dr	(21) 977-6056	Dead Tree/Status?	kw	Resident believes parkway tree is dead tree is dead ,we will remove as time permits	Tim	y	tg	10/7/21	
10/4/2021	1:31 PM	Dave Bakker	9317 Forrest Drive	(219) 923-3011	Sink Hole	sm	Resident said there is a sink hole in the easement by the fence of his backyard and his neighbors. He thinks the water line runs through that area. Please advise resident Dan is checking it	WT/SW	y	tg	10/40/21	
10/5/2021	7:50 AM	Pat Vanderbilt	3102 Wirth Road	(219) 671-6369	Sink Hole	sm	Resident said that the manhole cover in front of her house has a sinkhole around it. They see no sinkhoile.	WT/SW	Y	AK	10/5/21	8:43 AM
10/5/2021	8:37 AM	Laura Panozza	9452 Saric Drive	(219) 718-9616	Drainage Issues	sm	Resident said she had a plumber out to flush out main line and it is still backed up Can someone come out to check Jimmy checked it, main sewer is clear and her cleanout is not, Jimmy talked to her and advised her.	WT/SW	Y	AK	10/5/21	3:00 PM
10/6/2021	9:10 AM	Louise Volpi	9546 Manor Drive	(219) 922-6069	Other: See Notes	sm	Resident said a truck hit the tree branch in the parkway and it is hanging in the street..Jeff will get it. Louise called to say the guys did a great job!!!!	Street	y	bkb		
10/6/2021	1:10 PM	Terry Miller	2517 River Drive	(630) 518-8974	Other: See Notes	sm	Resident said a big branch fell from the tree in the parkway..Jeff will get it.	Street	y	bkb		
10/7/2021	8:58 AM	Richard Crozier	45th Street	(219) 838-7154	Pot Hole	sm	Resident said there is a big pot hole at the entrance of Dollar General on 45th Street..Its in Dollar generals paking lot entrance,not on our street.	Street	y	bkb		
10/7/2021	10:53 AM	John McGowan	3348 Garfield	(219) 923-8969	Other: See Notes	sm	Resident said lawn maint. Ran over the water pipe in the back yard and it is bent at about a 20 degree angle. It is between the barn and tree. The pipe is not leaking. Adam and Grant repaired it, like champs.	WT/SW	Y	AK	10/7/21	11:16 AM
10/8/2021	8:30 AM	resident	3634 Sandalwood Ct		Branches Missed	sm	Resident called because she has branches and wanted to know if they could be picked up..Dylan will get them	Street	y	bkb		
10/8/2021	10:20 AM	Joseph Nemeth	9220 Grace Street	(219) 924-5689	Branches Missed	sm	Resident called because he has branches and wants to know if they could be picked up..Dylan will get them.	Street	t	bkb		
10/11/2021	8:00 AM	Gordon-st. James Church	45th & Kennedy Avenue	(219) 293-1080	Branches Missed	sm	Gordon called from ST. James Church, he has branches on the north side of the rectory by the fire station to be picked up..Add to list and we will try to get them on Friday.	Street	y	bkb		
10/11/2021	9:30 AM	Shane Skinner	8201 Grace Place	(847) 344-1128	Dead Tree/Status?	sm	Resident believes the tree in the parkway by the driveway is dead. Please advise resident tree is deaed we will be able ts remove it	Tim	y	tg	10/18/21	
10/11/2021	11:27 AM	Michael Ordonez	3724 41st Lane	(773) 600-0561	Water Meter	sm	Resident said he has a small leak at the water meter and wants someone to come out and look at it. He just bought this house and the home inspector told him it is the towns responsibility. It was his inside valve, Kyle advised him.	WT/SW	Y	AK	10/11/21	2:41 PM

10/11/2021	3:15 PM	Jacquelyn Jiminez	3424 Ross Place	(219) 765-4201	Other: See Notes	sm	Resident would like a tree planted from the Community Tree Grant Program. Highland removed one of the trees in the parkway and she would like it replaced Please advise resident we cannot plant a new tree in parkway due to the massive size of the buried stump from a previous tree. maybe next year if it rots away enough will put on spring list	Tim	y	tg	10/17/21	
10/12/2021	12:05 PM	Elizabeth Linn	2928 Parkway Drive	(219) 677-2002	Other: See Notes	sm	Resident wants information on the Sidewalk Replacement Program. Please advise resident..Talked to resident.	Street	y	bkb		
10/13/2021	8:31 AM	Tara Smith	8322 Liable Road	(219) 808-2347	Other: See Notes	sm	Resident wants to know if we can cut down the big stalks in the retention pond. Resident would also like to talk to the supervisor about this.	Street				
10/13/2021	9:43 AM	Alan Austin	3332 Farmer Drive	(219) 895-8102	Other: See Notes	kw	We took a tree out but the stump is still there. Resident would like a call back on when the stump will be removed resident was told that Dave would grind it when he comes into town	Tim	y	tg	10/19/21	
10/13/2021	10:11 AM	Angelo Xidas	9455 Parkway Drive	(219) 924-4150	Dead Tree/Status?	sm	Resident has a dead tree in the parkway that is supposed to be removed. He is wanting to know when that will be tree is gone	Tim	y	tg	10/19/21	
10/13/2021	10:45 AM	Mike Larson	9830 Parkway Drive	(219) 836-2400	Other: See Notes	sm	Resident wants to know if the curbs can be repainted yellow on Parkway Drive...I will let Jeff know and see if it can be done this year, since we just acquired yellow paint.	Street	y	bkb		
10/14/2021	10:30 AM	Ellen Gargano	8927 Ohio Place	(219) 902-6106	Other: See Notes	sm	Resident said while they were milling in front of her house a chunk of her driveway was pulled up and left there. She wants to know if you can fix it. Please advise resident..This would be up to Reith Riley since they are the ones doing the work. Called resident and told her.	Street	y	bkb		
10/18/2021	12:44 PM	Blane Roberts	8842 Branton Avenue	(773) 504-3707	Other: See Notes	sm	Resident would like to talk to someone about getting a tree planted from the tree program. Please advise resident is put on the spring 2022 planting	Tim	y	tg	10/20/21	
10/18/2021	3:07 PM	David Krolman	2115 Teakwood Lane	(630) 802-6152	Dead Tree/Status?	sm	Resident thinks the tree in the parkway is dead. Please check and advise. The resident would like the tree replaced next year if it is dead. Email dave@krolman.net not dead yet advised resident the tree is not dead enough for us to remove keep an eye on it and call us in the spring if it worsen's	Tim	y	tg	10/20/21	
10/19/2021	7:40 AM	resident	Ohio Place & Wirth Road		Other: See Notes	sm	Resident said after they were done paving on Ohio and Wirth the truck dropped asphalt all over East bound on Wirth Road. Resident wants to know if someone can come and clean it up...Derek was notified.	Street	y	bkb		
10/19/2021	9:25 AM	Marilyn Majchrowicz	2035 Cedar Circle	(219) 836-0591	Other: See Notes	sm	Resident would like a tree planted in the parkway from the tree program. I told her she would be added to the list for next year. Email: mj210@sbcglobal.net	Tim	y	tg	10/20/21	
10/19/2021	10:44 AM	Maryann Tuskan	8933 Cottage Grove Avenue	(219) 838-6965	Other: See Notes	sm	Resident said asphalt is on her curb from the paving. She would like it removed..Derek was notified.	Street	y	bkb		
10/19/2021	11:30 AM		3333 North Dr		Other: See Notes	kw	next to this address, North Dr pump station, grass is about a foot and a half tall. Are we going to mow again? Gave to Brenden to check has been cut	Street	y	tg	10/19/21	
10/20/2021	8:00 AM	Scott Kulinski	2920 Grand Blvd	(219) 545-4370	Dead Tree/Status?	sm	Resident called to see if his tree is going to be cut down. (call log 9/8/21) Please advise resident spoke with resident again and told him that if anything changes with tree to call back but I cannot take it down now	Tim	y	tg	10/20/21	
10/20/2021	1:08 PM	Joann Franczek	9204 Grace Street	(219) 629-0815	Dead Tree/Status?	sm	Resident had a both tree's removed and was told someone would come out to level and seed that area. Please advise resident left a message telling her we do not do the restoration after a tree is cut down	Tim	y	tg	10/20/21	
10/21/2021	1:33 PM	Terry	9007 Parrish		Dead Tree/Status?	sm	Resident called about the tree in the parkway at the neighbors house just east of them. She believes the tree is dead. She is afraid that the tree might fall and cause damage. Email terry_strouse@yahoo.com the tree is dead has been given to Dave	Tim	y	tg	11/10/21	
10/21/2021	3:36 PM	Cynthia Frey	2148 Cypress	(219) 513-6230	Other: See Notes	sm	Resident needs the sprinkler meter removed after October 26th. Please call resident after it is removed so she knows it is done.	WT/SW		AK		
10/22/2021	9:39 AM	Kevin Wilson	9607 Boulavard	(219) 934-0385	Other: See Notes	sm	Resident called because while they were paving they broke tree branches (corner house) - 1 hanging down on Boulavard and 1 hanging down on 44th. Resident is worried that someone might get hurt and would like someone to come and cut those branches...Gave to Jeff.	Street	y	bkb		
10/22/2021	1:50 PM	Christopher Mihas	2717 Wicker Avenue	(219) 805-8081	Other: See Notes	sm	Resident said someone cut trees and left all the branches in the alley behind his garage and didn't pick them up. Wants someone to come and pick them up. He is not sure if it was the town..The Town did not cut any trees at this location.	Street	y	bkb		
10/25/2021	7:58 AM	Majorie Kijurna	2909 38th Street	(219) 718-8408	Drainage Issues	sm	Resident has 4 inches of water in her basement (no sump pump) and needs someone to come and check the drains Dan is going over there in the jet truck to check the main lines. Our lines are flowing, they have no sump pump.	WT/SW	Y	AK	10/25/21	9:00 AM
10/25/2021	12:47 PM	Sandra Lazlo	39th Place	(219) 924-6242	Other: See Notes	sm	Resident said the No Parking signs are still up on her street and it was paved last week. She wants to know if they can be picked up because of parking issues derek said Rueth Reilly is removing the signs Tuesday 10/26/2021	Street	Y	sm	10/25/21	1:03 PM
10/25/2021	1:00 PM	Renee - Wicker Park	corner of Indianapolis Blvd and Ridge Ro	(219) 678-3442	Water Meter	sm	Renee from Wicker Park called and would like the water meter pulled by the memorial at the corner of Indianapolis Blvd and Ridge Road Please call Renee when it is done so she knows Kyle is pulling it today 10/26/21	WT/SW	y	AK	10/26/21	1:34 PM
10/25/2021	2:11 PM	Don Dykstra	Prairie Ave & Whispering Oaks Ct	(219) 924-8461	Other: See Notes	sm	Tree branches are blocking the view of traffic at the corner of Prairie and Whispering Oaks Ct. Resident wants to know if someone can trim them..We'll check it out.	Street	y	bkb		
10/26/2021	8:12 AM	Javier Chavez	2021 44th Street	(219) 545-2528	Other: See Notes	sm	Resident said the ground is sinking by the sidewalk and sand is also coming up where the B-box is. Please check and advise resident Spoke with him and explained what was going on.	WT/SW	Y	AK	10/27/21	
10/26/2021	10:51 AM	Joshua Frayer	8934 Ohio Place	(219) 741-1439	Other: See Notes	kw	CCMG project tore up the approach to the driveway apron. Please check and let Derek know Told Derek about this 10/26/21	Street	y	bkb		
10/27/2021	7:30 AM	Maria Gonzalez	8704 Cline Avenue	(219) 838-5554	Drainage Issues	sm	Resident said her basement is flooded and wants someone to come out to check Her sump pump quit, Jimmy helped her out.	WT/SW	Y	AK	10/27/21	8:11 AM
10/27/2021	9:39 AM	Resident	Sara Lane - Georgetown Drive		Sign down/damaged	sm	Resident said the Sara Lane Sign is leaning over at the entrance of Georgetown..Gave to Jeff.	Street	y	bkb		
10/27/2021	2:35 AM	Resident	9044 Ohio Place		Other: See Notes	sm	Resident called and is worried because at the corner of Ohio Place and Wirth Road the corner is tore up with only 4 sticks for caution. Can something else be put there because Halloween is coming and he is afraid a child might fall and get hurt..Will put up a couple of Verticades.	Street	y	bkb		
10/27/2021	3:48 PM	Sandra Smith	8244 Gordon Drive	(708) 913-3467	Other: See Notes	sm	Resident would like information on the sidewalk replacement program	Street				
10/28/2021	1:16 PM	Sandra Buono	8143 4th Place West	(219) 838-3026	Other: See Notes	sm	resident said her shut off valve was replaced and where it was dug up it is sinking. She wants to know if we can come out and fix it. I will put it on the restoration list we will be starting next week....so yes.	WT/SW	Y	AK	10/28/21	1:55 PM
10/29/2021	11:58 AM	Gary Walker	3125 44th Street	(219) 922-8013	Drainage Issues	sm	Resident said they have water coming up in their bathtub and toilet Jimmy is going to check - It is the residents responsibility	WT/SW	Y	sm	10/29/21	2:10 PM
11/1/2021	9:00 AM	Justine Rumas	2920 Parkway Drive	(219) 688-0518	Other: See Notes	sm	Resident would like to follow up with the sidewalk replacement program. She received an estimate and wants to know if she can get it done now. Please advise resident..Talked to resident.	Street	y	bkb		
11/1/2021	10:30 AM	Paul Kincaid	2306 Martha	(219) 805-7765	Water Meter	sm	Resident called to have the water meter from the sprinkler system pulled for the winter Kyle got it	WT/SW	Y	AK	11/2/21	8:09 AM
11/1/2021	10:54 AM	Barb Cowan	9044 Ohio Place	(219) 741-2488	Other: See Notes	sm	Resident wants to know when the project will be done at the corner of Ohio Place and Wirth Road. Please advise resident	Street				
11/4/2021	2:08 PM	Barbara Jurjevic	9033 Cottage Grove Avenue	(219) 201-3239	Drainage Issues	sm	Resident called and said she has standing water in her backyard and wants someone to come out to check the problem Please advise resident Kyl e is going to look at it and talk to her. I gave her a copy of our back yard drain policy.	WT/SW	Y	AK	11/4/21	2:21 PM
11/5/2021	12:00 AM	Emilio Amaya	2427 81st street	(219) 902-9908	Drainage Issues	sm	Resident called because they have water coming up in their front yard I called Aaron about this Wife called back complaining that we shut the water off and what are we going to do because she has kids. I talked to the landlady and she is contacting plumbers now to get it fixed asap.	WT/SW	Y	AK	11/5/21	12:51 PM
11/5/2021	11:51 AM	Mary Alicea	3038 41st Street	(219) 455-2714	Other: See Notes	sm	Resident is wanting to know when the restoration will be done from work that was done previously at her house. Please advise resident I called and spoke with her	Street	Y	AK	11/5/21	12:56 PM
11/5/2021	12:00 PM	Cathy	9548 Hook Street	(219) 775-7396	Other: See Notes	sm	Resident said we did work in her front yard and left a big hole. She is worried someonre will get hurt. She said it needs dirt and sod to fix it. Please advise resident Talked to her	WT/SW	Y	AK	11/5/21	1:39 PM
11/5/2021	12:05 PM	Lois Gard'kish	2904 Parkway Drive	(219) 838-0375	Other: See Notes	sm	Resident would like information on the sidewalk replacement program. Please advise resident	Street	y	bkb		
11/5/2021	12:14 PM	Bret Rindoks	2933 Parkway Drive	(219) 588-1794	Other: See Notes	sm	Resident wants information about getting the apron replaced. Please advise resident	Street	y	bkb		
11/5/2021	2:41 PM	Resident	9405 & 9514 Saric Drive		Other: See Notes	sm	Resident called and said a tree at 9405 amd 9514 Saric both have braches Hanging over in the street. Resident is worried that they might fall off. Please check and advise.No problems that I can see.	Street	y	bkb		
11/8/2021	8:24 AM	Sherry	9605 Boulevard Drive	(219) 513-9603	Other: See Notes	sm	Resident wants to know when the work will be done at the corner of Blvd & 44th Street. Please advise resident	Street	y	bkb		
11/8/2021	11:42 AM	Lori Auwerda	3048 Laporte	(219) 838-6527	Other: See Notes	sm	Ressident has a big branch that fell from the storm a few weeks ago and she said it was never picked up. It is at the corner of Laporte and Delaware,.Add to the list.	Street	y	bkb		
11/8/2021	12:13 PM	Malene Zavesky	9034 Cottage Grove Avenue	(219) 381-4653	Other: See Notes	sm	Resident called and said work was done on her street and they left a Porta Potty and broken up pavement by her driveway. She would like someone to pick it up.We will let Derek Know.	Street	y	bkb		
11/8/2021	1:30 PM	Clyde Brown	2230 Oakdale	(219) 923-5542	Other: See Notes	sm	Resident said when they replaced his sidewalk the sprinkler system was pushed down and broke. Please check and advise resident cell # 219-689-8206..Will have to let Derek know, this is a CCMG street.	Street	y	bkb		
11/9/2021	9:29 AM	Dennis Z elenke	3411 Duluth Street	(219) 972-2288	Sidewalk/Curb Issue	sm	Resident said his sidewalk is raised up and wants someone to come and look at it. (sidewalk replacement program) Please advise resident	Street				

	9:35 AM	Carl Hecht	9234 Highland Place	(219) 924-3654	Other: See Notes	kw	Walk-in. Resident's sprinkler system was damaged when Rieth-Riley installed the ADA tile. Talked to Derek. Gave resident the phone number for the project manager.	Street	y	kw		
11/9/2021	2:07 PM	Lenore Murovic	2338 Ridgewood	(219) 838-4734	Other: See Notes	sm	Resident said there is a Nipsco lot across from her that someone left 4 bags of lawn waste that needs to be picked up. She said Nipsco has not been out there…Gave to Sean.	Street	y	bkb		
11/10/2021	9:27 AM	Barbara	9044 Ohio Place	(219) 741-2488	Other: See Notes	kw	Resident is pissed that the work is still not complete on her sidewalk and apron. She was told it would be complete by now and is concerned about the upcoming cold temperatures. Called Derek, he will stop over and speak with the resident today	Street	y	kw		
11/10/2021	10:25 AM	Lucy Wilson	9607 Blvd Drive	(219) 776-4005	Other: See Notes	sm	Resident said big rocks were moved when work was done at the corner by her house and they never put the rocks back. She would like the rocks put back. She is home this Monday so she can tell you where they go. Please advise resident before going..This is from Reith Reily and the CCMG project.	Street	y	bkb		
11/10/2021	1:04 PM	Kevin Hanshew	3123 Lois Place	(219) 924-3984	Water On/Off Req.	sm	Resident needs their water off at 8:30am on Thursday 11/11/21. He is having plumbing work done at that time On it	WT/SW		AK		
11/10/2021	2:01 PM	Tarick Ziadat	2410 River road	(773) 877-8250	Sewer Backup	sm	Resident said they have sewer backup in the house and a small puddle outside. Can someone come check and advise resident Jimmy looked, our sewers are clear and no one is answering the door.	WT/SW	Y	AK	11/10/21	2:21 PM
11/10/2021	3:59 PM	Robert Birto	2705 Lincoln St	(954) 937-0246	Other: See Notes	kw	Possibly Nipsco doing work on a pole. 6ft long wooden pole sitting in parkway with large spikes coming out of it. Also wiring hanging as a loop, low and dangerous. Please check	mark				
11/11/2021	10:55 AM	Patricia Finick	3006 98th Street west	(219) 924-4688	Drainage Issues	sm	Resdident said she has a puddle on the east side in the front of her house. Normally doesn't have that puddle. She wants someone to come out to check Jimmy checked and spoke with resident.	WT/SW	y	kw		
11/11/2021	11:00 AM	Carol Gray	9533 Saric Drive		Other: See Notes	sm	Resident called to complain because she is cleaning the leaves from the sewer and the street sweeper has went by and keeps pushing them back after she cleans it . She hung up on me ..Okay.	Street	y	bkb		
11/11/2021	11:40 AM	sue	2209 Terrace	(219) 545-2263	Other: See Notes	sm	Resident called because a truck Knocked down a branch and she wants to know when it will be picked up…I believe this is the address I checked before about a branch which is actually a small pile of branches and they should be on the list for the next time we pick up branches which will probably be in December, weather permitting.	Street	y	bkb		
11/11/2021	12:14 PM	resident	2140 Martha Street		Other: See Notes	sm	Resident called and said there is a Utility Work sign in the street and has been there for about 4 weeks…Not our sign, might belong to AT&T where they were working on Martha, doesn't look like they are quite done yet.	Street	y	bkb		
11/12/2021	9:30 AM	resident	Kennedy & Main		Other: See Notes	sm	Resident called because someone dropped a big box of nails on Kennedy going south by the gas station turning west on Main Street..Sent Lou.	Street	y	bkb		
11/12/2021	9:49 AM	Lisa Synms	3129 Lois Place	(219) 670-5312	Dead Tree/Status?	sm	resident called, the town cut her tree down and the stump is still there. She would like to know when the stump will be removed. Please advise resident	Tim	y	tg		
11/12/2021	11:34 AM	Tim Connolly	9312 Ellen Drive	(708) 271-7955	Water Pressure	sm	Resident said the water pressure is vey low from all of the faucets and would like someone to come out to see if there is a problem. Please check and advise resident Kyle cleaned his faucet screens for him and fixed all his problems.	WT/SW	Y	AK	11/12/21	1:04 PM
11/15/2021	9:07 AM	Jessica Morgan	3816 Jewett	(630) 523-3449	Water On/Off Req.	sm	Resident would like the water shut off on Tuesday November 16th at 8:30am to replace a sink Kyle took care of this	WT/SW	Y	AK	11/16/21	10:42 AM
11/15/2021	11:00 AM	Kelly Narantle	9221 Prairie	(219) 742-7870	Pot Hole	sm	Resident said there are 3 big pot holes at the corner of 41st and Prairie by the park..Pete will get them.	Street	y	bkb		
11/16/2021	10:44 AM	Kevin	3521 43rd Pl	(219) 689-9709	Leaves Pickup	kw	resident has numerous bags of leaves for pickup	Street				
11/16/2021	3:35 PM	Abigail Hiatt	8944 Ohio Place	(219) 290-3053	Other: See Notes	sm	Resident said work was done on Ohio Place and the sprinkler system pipes were exposed at her residence during this. She wants to know when it will be fixed. Please advise resident	Mark				
11/16/2021	4:11 PM		3129 Duluth		Other: See Notes	kw	Check bbox and make sure it functions correctly. Please let Mark know and he will contact the resident. Kyle will check it today in the AM	WT/SW	Y	AK	11/17/21	7:12 AM
	2:36 PM	Debbie Strain	2631 Highway Avenue	(219) 629-6109	Other: See Notes	sm	Resident said Nipsco removed a pole in the alley and left a lot of debris and would like the town to come and pick it up. It is causing a problem with parking,.. Looked at this and there is nothing for us to clean up.	Street	y	bkb		
11/17/2021	2:36 PM	Michelle Stewart	8012 Richard St	(219) 794-4373	Water Pressure	kw	Resident has pressure issues on the hot side. Her Nipsco Home Service assured her it was not her hot water heater. She would like her water pressure checked. Please call before going. :) I will call her before Kyle heads over to check her pressure.	WT/SW	Y	AK	11/18/21	1:02 PM
11/18/2021	3:59 PM	George	8605 5th St	(219) 359-8545	Other: See Notes	kw	Decorative light pole was hit by a sleeping officer approx. 8 to 10 years ago and now has fallen over and the resident feels we should be responsible for it :) George called back 11/19 12:55pm wanting to know when someone was going to come and look at the pole because it's already 1:00pm on Friday :)	mark	Y	TG	11/19/21	1pm
11/19/2021	11:40 AM	Joseph Marquez	9331 Waymond Ave	(219) 801-0209	Sidewalk/Curb Issue	kw	Resident has a dip between the apron and curb and is wanting quotes and information on the sidewalk replacement program..Called and left message.	Street	y	bkb		
11/19/2021	12:19 PM	KentTroxel	3647 41st Ln	(219) 765-1710	Tree/Branch Issues	kw	2 parkway trees full of carpenter ants and one is split. Please check the trees and let her know	Tim	y	tg	11/29/21	1pm
11/23/2021	10:49 AM	Joseph myers	9127 Waymond	(219) 359-0261	Locate Lines/B-box	sm	Resident would like someone to come out and locate the bbox Gave to Kyle	WT/SW	Y	AK	12/2/21	8:01 AM
11/23/2021	11:55 AM	Marcia Mccarty	3433 Ross Place		Leaves Pickup	kw	Kids cars were blocking leaves and are now moved, she thought tomorrow was her pickup…Tuesday Zone 2 is always her pick up day, they wont have time to back track this week.	Street	Y	bkb		
11/23/2021	12:03 PM		3304 Strong St		Leaves Pickup	kw	Strong St and Cottage Grove Ave leaves missed..Didnt have them out in time.	Street	y	bkb		
11/24/2021	10:40 AM	David bouno	8143 4th Place west	(219) 838-3026	Other: See Notes	sm	resident said we changed the shut off vavle and now there is a hole in that spot, can we go out and fill it in before winter so no one gets hurt	WT/SW				
11/24/2021	10:45 AM	June	entrance to walgreens - ridge road	(219) 308-9720	Other: See Notes	sm	Resident said the weeds are overgrown at the exit going west on ridge road from walgreens. She said the view is obstructed coming on ridge road because of the weeds..This is not our property,but will take a look at it.	Street	y	bkb		
11/24/2021	11:00 AM	Francis Danner	2705 North Drive	(219) 923-0783	Leaves Pickup	sm	resident said someone dumped a lot of leaves at a vacant home in the cul-de-sac,,can someone please pick them up..Yes the next time we pick up in that zone.	Street	y	bkb		
11/24/2021	12:11 PM		9514 Saric		Tree/Branch Issues	kw	Resident called originally on 11/5. She states if you are driving northbound you can see the decay and rot of the branch overhanging the street. She feels with a strong wind or heavy ice it is going to bring the branch down causing damage. Please check again.Will check again...Jeff looked at this as well and did not see anything that warrants removing the branch, its not broke or hanging in the line of traffic, the tree it self is not dead and we do not trim, prune or remove branches from trees even in the parkways, thats up to the residents,there are several trees in town where branches protrude out over street.	Street	y	bkb		
11/24/2021	12:30 PM	Sally Krooswyk	2745 41st Street	(219) 614-6255	Sewer Backup	sm	resident has sewage backup coming up her drain and wants us to come out to check Jimmy is going to check Everything clear on our side. I called the resident and told her	WT/SW	Y	sm		
11/29/2021	9:17 AM	resident	corner of Cline & Wirth	(219) 512-5522	Other: See Notes	sm	An illuminator pole was knocked down and broke can we go and fix it.Gave to Jeff.	Street	y	bkb		
11/29/2021	9:54 AM	resident	9027 Cottage Grove Place	(219) 512-5522	Leaves Pickup	sm	Resident said their leaves and the rest of the block were not picked up last week and would like them picked up..They were not picked up last week because this is todays route.	Street	y	bkb		
11/29/2021	1:23 PM	resident	3534 Wicker Avenue	(219) 576-2790	Leaves Pickup	sm	Resident has bags of leaves that were not picked up today and she wants to know why because it doesn't say it in the leaf schedule. Please advise resident..Because the leaf machines suck up piles of leaves not bags of them, we will get them picked up.	Street	y	bkb		
11/29/2021	1:55 PM	resident	Ridge Road & Highland Street		Tree/Branch Issues	sm	Resident called and said the tree at the northside of Ridge Road and Highland Street is blocking the street sign..Gave to Jeff.	Street	y	bkb		
11/30/2021	10:35 AM	Joyce Erb	2430 Ridge Road	(708) 341-4554	Leaves Pickup	sm	Resident called because she has mound of leaves and wants top know if we can pick them up, she is afraid it will cause an accident if they go on Ridge Road..They are Zone 4, so next Thursaday is the pick up day...she shouldn't have had her service or whoever put there until it was closer to her pick up day.	Street	y	bkb		
11/30/2021	1:05 PM	Steve Gust	3613 41st Lane	(219) 512-5522	Leaves Pickup	kw	Doesn't understand why they sucked up his leaves but didn't pick up the bagged ones. He thought this was the last week and the website says to bag them so that is what he did. Numerous bags of leaves ..Sean will try and get them today.	Street	y	bkb		
11/30/2021	1:49 PM	resident	9648 Liable Road		Leaves Pickup	sm	Resident said her leaves were not picked up today. They picked up her neighbors but not hers ..will get them tomorrow.	Street	y	bkb		
11/30/2021	1:57 PM	resident	7940 Spruce		Branches Missed	sm	resident said someone put a huge stack of branches behind her garage and she wants someone to come and pick them up..We did not put any branches behind her garage nor are we picking them up…need to put in parkway and add to the list to be picked up later.	Street	y	bkb		
11/30/2021	2:40 PM	Casandra	3217 Eder St	(815) 409-9627	Locate Lines/B-box	kw	needs bbox located for plumber to repair inside valve…Gave to Kyle…located and it works.	WT/SW	y	bkb		
11/30/2021	3:15 PM	resident	9114 Liable		Leaves Pickup	sm	resident said her leaves were not picked up Monday also the neighbors across the street..They will get them today.	Street	y	bkb		
11/30/2021	3:35 PM	Doug Ashberhof	3139 Lincoln Place	(219) 923-5319	Leaves Pickup	sm	resident said his leaves were not picked up..This was last weeks route..Zone 5	Street	y	bkb		
12/1/2021	1:45 PM	Hugh McCormick	8808 Kennedy Avenue	(219) 359-8371	Leaves Pickup	sm	Resident wants to talk to a supervisor about his leaves being picked up. The leaves are in the back by the alley and he said there are too many to bring to the front and they will take up the whole sidewalk Zone 5…Talked to resident, all is good.	Street	y	bkb		
12/2/2021	8:30 AM	Molly Marty	3730 41st Lane	(773) 243-7714	Water Pressure	sm	Resident said she has no water pressure in her house, it started last night. Every faucet has low water pressure Please advise resident Kyle will meet her and check the pressure at 1:00 pm today. Bbox wasn't turned completely, Kyle took care of it and I called the resident to let her know	WT/SW	Y	AK	12/2/21	9:27 AM

12/2/2021	2:38 PM	resident	3040 99th Place		Leaves Pickup	sm	resident said his leaves were missed today along with 3035 and 3034 99th Place..To many cars were in the way, they will try and get them today.	Street	y	bkb		
12/2/2021	2:48 PM	Robert	9234 Prairie Ave	(219) 838-6743	Leaves Pickup	kw	pickup day is tomorrow. Resident has bagged leaves but is worried they will be missed because the block was done today...Bags are picked up later and not by the leaf vacs, they will be in that zone again tomorrow, add bags to list and we are planning on picking them up tomorrow...Hopefully.	Street	y	bkb		
12/3/2021	8:24 AM	Meyer	2031 Main Street		Leaves Pickup	sm	resident called and said his leaves were not picked up yesterday, he also said the town would pick his leaves up in his driveway because of the ditch...They will get them later today.	Street	y	bkb		
12/3/2021	12:03 PM	KJ Gross		(219) 924-7915	Other: See Notes	sm	Resident said there is a concrete stump left from a light pole directly behind the fire station on 45th Avenue. Resident said it is a vehicle hazard...The pole is painted bright yellow and is in the fire station parking lot, this is not a street so they shouldn't be using the parking lot as a cut thru from one street to another.	Street	y	bkb		
12/8/2021	11:54 AM	resident	3531 Condit		Leaves Pickup	sm	resident said their leaves were missed...Cars in the way, but the crew was in a Merrry mood so they went back and picked them up anyway.	Street	y	bkb		
12/8/2021	12:29 PM	resident	8635 Orchard Drive		Leaves Pickup	sm	resident said their leaves were missed..Ok, will get them later today.	Street	y	bkb		
12/8/2021	2:40 PM	resident	8217 Grace Place		Leaves Pickup	sm	resident asked if we could pick up her leaves, her sevice just got them done...Maybe next week toward the end of the week or in 2 weeks.	Street	y	bkb		
12/9/2021	7:40 AM	mary Leep	3106 Condit Street		Leaves Pickup	sm	resident said her leaves were not picked up yesterday, they could have been done late but could you please pick them up..Will get them later today.	Street	y	bkb		
12/9/2021	12:05 PM	Rich	2724 Clough	(219) 670-9604	Other: See Notes	kw	Requesting street sweeper in 2700 block of Clough, a glass table that was put out for garbage was broken in the roadway. He walks his little dog in his wheel chair and is afraid the pooch might get glass in his paws He also would like a phone call when Lou will be able to get over there so he can make sure his neighbors vehicle is off the street :)..Lou took care of it.	Street	y	bkb		
12/9/2021	1:44 PM	Joyce Erb	2430 Ridge Road		Leaves Pickup	sm	resident called and said she has more leaves to be picked up..Tomorrow's Route.	Street	y	bkb		
12/9/2021	1:55 PM	Maureen Tobin	2942 Norman Street	(219) 669-1785	Other: See Notes	sm	Resident said water is bubbling up by her sidewalk just east of the driveway only when it is raining, and looks like that area is sinking. Resident would like to be there when someone comes out. Please advise resident before going,,Gave to Kyle	WT/SW	y	bkb		
12/10/2021	1:10 PM	Ron Jelski	9011 Idlewild Drive	(219) 793-5214	Other: See Notes	sm	Resident called because At&t cut branches down and put them in front of his house on the parkway and in the street and just left them there. Can we pick them up?..Chipper will be out all next week.	Street	y	bkb		
12/10/2021	8:58 PM	Paul Whitener	9320 Southmoor Avenue	(219) 924-3718	Drainage Issues	sm	Resident said the storm sewer on the south side of his property is not draining and there are no leaves blocking it. Please check and advise resident (this call is from Friday night) Jimmy will be there Tuesday morning	WT/SW		AK		
12/13/2021	8:40 AM	Paul Fordyce		(219) 902-4178	Leaves Pickup	sm	Resident has 2 piles of leaves from Friday night storm that he needs picked up..Ok, next week they will be in the north end.	Street	y	bkb		
12/13/2021	9:20 AM	Malene Zavesky	9034 Cottage Grove Avenue	(219) 381-4653	Other: See Notes	sm	Resident called back (11/8/2021)because work was done in front of her house and they left broken up pavement by her driveway. She would like it picked up...I'll contact Derek about it.	Street	y	bkb		
12/13/2021	11:00 AM	Mary Lewis	2101 Ridgewood	(219) 838-0339	Leaves Pickup	sm	resident has leaves in the parkway to be picked up (zone 4)..Ok	Street	y	bkb		
12/13/2021	12:42 PM	resident	42nd Place & Kleinman		Other: See Notes	sm	resident called because there are 2 cable wires hanging down at the corner of 42nd Place and Kleinman and if a truck goes by it will hit them. Called AT&T to report the line down. Ticket # PY1HJC89	Street	y	bkb		
12/13/2021	1:00 PM	Carlos Munoz	9028 Cottage Grove Place	(219) 713-7515	Leaves Pickup	sm	resident has leaves in the parkway to be picked up (zone 5)..Ok	Street	y	bkb		
12/14/2021	11:24 AM	Karen Tiemens	3206 Wirth Road	(219) 688-7169	Pot Hole	sm	Resident said the neighbor had their tree cut down and when it fell it put a big pot hole in front of their house. She would like the pot hole fixed..We will have to patch this.	Street	y	bkb		
12/15/2021	11:15 AM	Mary Smith	3013 Grand Blvd	(219) 923-2498	Other: See Notes	sm	resident said an 8ft to 10ft branch fell from the wind and wants to know if someone can come and pick it up....Brendan and Dennis will get it.	Street	y	bkb		
12/15/2021	12:25 PM		3520 42nd Pl		Water On/Off Req.	kw	Resident needs water off for a leaking inside valve. Kyle went over and shut it off. Resident will call back for water on when the valve is repaired, just let Kyle know when he calls	WT/SW	y	kw		
12/15/2021	3:01 PM	Jennifer Sheets	3513 43rd Street	(219) 671-9427	Dead Tree/Status?	sm	resident said her tree in the parkway is dead,and is worried it will fall please check and advise resident tree has buds on it told resident to call back in spring when it should start to bud and ill recheck it	Tim	y	tg		
12/16/2021	7:50 AM	Javier Chavez	2021 44th Street	(219) 545-2528	Other: See Notes	sm	resident said sand is coming up by the bbox and the sidewalk and starting to go in the street Adam and Jimmy are checking it out.	WT/SW	Y	ak	12/16/21	12:04 PM
12/16/2021	7:55 AM	Javier Chavez	2021 44th Street	(219) 545-2528	Tree/Branch Issues	sm	resident said there is a branch from the tree in the parkway that is hanging over his house and is about to fall because of the storm please check and advise resident...No issue for us.	Street	y	bkb		
12/16/2021	10:38 AM	Frank	2013 37th pl	(219) 972-0792	Leaves Pickup	kw	Resident has leaves in 2 Republic garbage cans on the curb. He is Zone 10 but doesn't want to dump them with the high winds. He will dump them for the guys if he sees them coming if not will they get them? Let the gentleman know please and thank you.	Street	y			
12/16/2021	11:00 AM	Fred Leep	3225 Ridge Road	(219) 880-5731	Tree/Branch Issues	sm	resident has a big tree branch that has fallen from the storm and asked if it could be picked up..They will get it tomorrow.	Street	y	bkb		
12/17/2021	11:13 AM		10124 4th St		Leaves Pickup	kw	Resident dumped her leaves yesterday when they were sucking leaves on the opposite side of the road. When they came down her side they skipped hers.	Street				
12/17/2021	11:13 AM	Park Place Townhomes	Clough and 5th		Other: See Notes	kw	At least 3 of the old fashion lamp post went out at the same time (2 on Cambridge Way and the other on Clough and 5th)...Jeff will check iy them out.	Street	y	bkb		
12/21/2021	4:00 PM	Octovio Castellanos	3035 98th St	(219) 313-1858	Locate Lines/B-box	kw	needs bbox located first thing in the morning water line is leaking and plumber will be out to fix it as soon as it located Box is broken, we will be fixing it early next week.	WT/SW	Y	AK	12/22/21	8:38 AM
12/22/2021	11:37 AM	Ashley Creviston	9351 Ellen Drive	(219) 713-5808	Other: See Notes	sm	Resident would like to talk to the supervisor about the water because she is getting a salt water fish tank Operation Saving Nemo, Completed	WT/SW	Y	AK	12/22/21	2:54 PM
12/27/2021	9:05 AM	Yesenia Sebastian	9228 Wildwood	(708) 323-0960	Other: See Notes	sm	Resident said her street was redone and when ir rains there is a huge puddle at the end of her driveway, she is concerned when it gets cold and it turns to ice she wants to know if something can be done to fix it please advise resident	Street				
12/27/2021	11:18 AM	Dennis Zelenke	3411 Duluth Street	(219) 972-2288	Other: See Notes	sm	Resident has water bubbling up in his downstairs toilet. He would like someone to come out and check on our side. Please advise resident Dan is checking it out and will advise Not our issue	WT/SW	Y	AK	12/27/21	12:02 PM
12/30/2021			2731 39th Place	(219) 712-3655	Water On/Off Req.	sm	Resident would like his water shut off for plumbing work on Monday January 3rd at 3:00om for about 30 minutes. Resident will call back to verify Curb stop is broken, we will reapir it this week after locates arrive. Resident was notified.	WT/SW	Y	AK	1/3/22	"""\
12/30/2021		Becky	9901 Express Drive	(219) 961-9350	Water Pressure	sm	Resident said they have no water in the entire building. Service leak at the building. TLC is repairing it.	WT/SW	Y	AK	1/3/22	1:35 PM
12/30/2021	10:29 AM	Diane	2908 Cambridgeway	(925) 457-7970	Street Light Out	sm	Resident called because the light bulb was changed yesterday (12/29) for the street light but it did not come on . She would like someone to come back out to check it..Its an electrial problem and was sent to Midwestern for repair...Called resident and left a message.	Street	y	bkb		
1/3/2022	9:00 AM	Linda Lawbaugh	3613 45th Street	(219) 924-9228	Mailbox damaged	sm	Resident said her mailbox was plowed over by our truck, She would like it replaced. Please advise resident Sean and Dylan are putting up a temp for her today. I spoke with her.	Street	Y	AK	1/4/22	8:08 AM
1/3/2022	9:30 AM	Don Dykstra	2146 Timberidge Court	(219) 924-8461	Other: See Notes	sm	Resident said the plow truck knocked down 3 panels of fence and he would like it repaired. He would like to talk to a supervisor, he can order the fence but wants to know the procedure to get reimbursed. Please advise resident We repaired it and the resident was notified.	Street	Y	AK	1/3/22	9:57 AM
1/4/2022	7:53 AM	resident	Hess Drive		Other: See Notes	sm	resident said Hess Drive is a sheet of ice and cars are sliding and almost hitting parked cars Pete salted it earlier today.	Street	Y	AK	1/4/22	9:46 AM
1/5/2022	10:00 AM	resident	9235 Prairie Avenue		Tree/Branch Issues	sm	Resident said a big branch fell from the tree in the parkway, could we pick it up..Picked up.	Street	y	bkb		
1/5/2022	10:05 AM	Valerie Rashid	2525 River Drive	(708) 676-4744	Sewer Backup	SM	Resident said she has sewage coming up in her shower and bubbling in her toilet Please advise resident Jimmy chekced and advised	WT/SW	Y	AK	1/5/22	12:30 PM
1/5/2022	2:00 PM	Georgette Luce	9235 Prairie Avenue	(219) 923-2109	Dead Tree/Status?	sm	resident believes both trees in the parkway are dead - please advise resident advised resident that we need to wait until spring to verify if they are dead or not	Tim	y	tg	1/12/22	
1/7/2022	11:51 AM	Tammy Lopez	3912 Clough	(708) 845-6242	Dead Tree/Status?	kw	Resident believes the tree is splitting apart and dead there is one branch that looks like a truck hit it I will have sean cut it off	Tim	y	tg	1/12/22	
1/10/2022	12:10 PM		Downtown Highway Ave			kw	A handicap spot in front of a bible book store (same side of the road as Langel's) was not cleared of snow. Lady is pissed because she was trying to go to Langel's on Saturday night, is handicap, and had no spot available for her to park because of this. She informed me tons of pictures were taken and that this is unacceptable :) Sending Sean to check it...Dennis pushed it.	Street	y	bkb		
1/10/2022	2:00 PM		2605 Lincoln Street			sm	resident wants salt put down in front of her driveway because it is all ice driveway is on 1st street...Brendan laid some salt down.	Street	y	bkb		
10-Jan	3:45 PM	Daniel Vanek	8360 Liable Road	(219) 677-2127	Other: See Notes	sm	resident wants to know if there is a sewer line in front of his house please advise resident left a message informing resident there is NOT a san sewer in front of his property	WT/SW	y	tg	1/12/22	

1/11/2022	8:48 AM	Peggy Faught	9622 5th Place	(219) 688-5275	Sewer Backup	sm	Resident said she had Tiger Plumbing out for work and they said the liner is covering the hole for the discharge in the sewer line. She paid $465.00 to Tiger Plumbing and she wants reimbursed if this was the towns fault. She wants someone to come out and run the camera to check. Please advise resident Instituform accidently covered over this tap they are enroute to cut it out and pay the plumbing bill	WT/SW	y	tg		
1/11/2022	9:08 AM	resident	8815 Liable Road		Other: See Notes	sm	Resident has a big branch that fell and is in the parkway for pickup..Picked up.	Street	y	bkb		
1/11/2022	11:17 AM	resident			Street Light Out	sm	resident said the street light by 2031 Main Street is out..This is a Nipsco Pole, Nipsco notified.	Street	y	bkb		
1/11/2022	3:48 PM	Barb Ociepka	2033 Ramblewood Drive	(219) 922-0858	Pot Hole	sm	Resident said there is a huge pot hole on Main Street by Target going west before the railroad tracks. She said it is really dangerous and scratched her rim. Please advise resident..Brendan and Grant filled last night.	Street	y	bkb		
1/12/2022	1:26 PM	Katie Niemiec	3935 Wicker Avenue	(219) 895-0682	Sewer Backup	sm	Resident had water and sewage backup in the toilet and tub. She did have a plumber out to route it out and it helped but the plumber said she needs to get Highland out because something might be cracked. She would like someone to come out and run the camera to see if it is on our side. Please advise resident advised resident that we would televise our san sewer tomorrow on thursday,unable to televise on thursday because of cars in driveways I will have Dan try to get it on Monday the 17th 2022 Dan televised and there was NO problem with the sewer connection at the main	WT/SW	y	tg	1/12/22	
1/12/2022	3:01 PM	Maria Culbertson	3118 Ridge Road	(219) 616-0554	Street Light Out	sm	Resident said the street light to the right of her house is out..ok	Street	y	bkb		
1/12/2022	4:01 PM	Scott Oostman	2731 39th Place	(219) 712-3655	Water On/Off Req.	kw	Resident needs water off at 2:30 for plumber to replace valve, will call when he needs the water back on	WT/SW	Y			
1/13/2022	12:20 PM	Ron Hobbs	10124 4th Street	(219) 924-7135	Other: See Notes	sm	Resident said the plow truck plowed sod up on his sidewalk, which is now blocking his sidewalk. He wants someone to come out and take care of this so his sidewalk is not blocked It is the corner of 4th Street and 101st Place Gave to Dillon/Sean	Street	y	tg	1/13/22	
	11:15 AM	Bob Sexton	3031 97th Place	(219) 776-4929	Sidewalk/Curb Issue	sm	Resident would like to talk to someone about replacing his curb. Please advise resident	Street				
1/14/2022	1:50 PM		8820 2nd st		Other: See Notes	kw	This house was finaled back in June and we have not been able to shut off water because the bbox is broken. Can we please prioritize getting this one fixed. Someone is currently rehabbing the home. Doing this today	WT/SW	Y	AK	1/31/22	8:18 AM
1/18/2022	1:42 PM	resident	Entrance by Lincoln Center		Pot Hole	sm	Resident said there is a pot hole at the entrance of Lincoln Center at Lincoln Street Filled	Street	Y	AK	1/19/22	1:16 AM
1/18/2022	3:43 PM	James Szura	9342 Forrest Drive	(219) 680-6486	Sidewalk/Curb Issue	sm	Resident would like to have his sidewalk replaced and needs info on the sidewalk replacement program. Please advise resident…Talked to resident.	Street	y	bkb		
1/18/2022	3:45 PM	James Szura	9342 Forrest Drive	(219) 680-6486	Pot Hole	sm	Resident said there are pot holes on Forrest close to 41st Street and a pot hole on Kennedy and 44th Street going northbound in the right lane Filled	Street	Y	AK	1/19/22	1:16 AM
1/19/2022	9:02 AM	Debbie Holderman	8840 Osborne	(219) 923-7817	Sidewalk/Curb Issue	sm	Resident would like information on the sidewalk replacement program. Please advise resident..Talked to resident	Street	y	bkb		
1/21/2022	2:57 PM	building dept	2926 Strong Street		Other: See Notes	sm	building dept needs an inspection done on Monday 1/24/22 at 1:00pm 2926 Strong Street Open hole inspection for sewer repair..Matt did it.	WT/SW	y	bkb		
1/21/2022	3:00 PM	Danny George		(219) 924-4784	Other: See Notes	sm	Resident said his water is cloudy, he would like a call back from a supervisor about it	WT/SW				
1/24/2022	8:53 AM	Frank Bond	3003 Hess Dr	(219) 838-3729	Locate Lines/B-box	kw	Please locate bbox as soon as possible, resident needs a plumber to come in and change broken inside valve..Gave to Matt	WT/SW	y	bkb		
1/25/2022	9:05 AM	Stan Beasley	2805 44th Street	(708) 833-0741	Water Break	sm	resident called and said he thinks there is a water main break Gave to Brian	WT/SW	y	bkb		
1/25/2022	10:05 AM	Chris McDonough	2730 Ross Street	(708) 323-8435	Other: See Notes	SM	Resident wants to know if there was new water lines put in going to the house around 2005. He wants to replace the valve but would like to know about the lines first. Please advise resident	WT/SW				
1/25/2022	1:34 PM		10221 Birchwood Cirlce		Other: See Notes	kw	Resident's mailbox was plowed in and he can't get his medication ;) ..Gave to Dennis to check.	Street	y	bkb		
1/25/2022	2:05 PM	Hector - manager	9850 Indianapolis Blvd	(219) 961-9530	Water Break	sm	Hector, the GM from Drive Time said there is water and sand coming up from the sidewalk, grass and parking lot. Called Brian	WT/SW	y	bkb		
1/25/2022	2:21 PM	resident	3040 98th Place West		Other: See Notes	sm	resident asked if a plow can come back out because there is some snow in front of her driveway..Gave to Dennis to check.	Street	y	bkb		
1/26/2022	9:18 AM	resident	2000 Azalea Drive		Other: See Notes	sm	resident said his side of the street was not plowed and he has about a 6ft pile in front of his house , wants to know if the plow can come back through his street…it was plowed, just not as close to the curb that he would've liked…taken care of.	Street	y	bkb		
2/3/2022	8:57 AM	Tom - Meyers Plumbing	2166 45th Street	(219) 314-3362	Water On/Off Req.	sm	Tom would like someone to shut the water off at 8:00am at 2166 45th Street on Friday 2/4/22 Called and set it up with him. I will send someone first thing.	WT/SW	Y	AK	2/3/22	10:30 AM
2/3/2022	1:23 PM	Josh Scheeringa	2639 Clough	(219) 577-5802	Sewer Backup	sm	resident said he has sewage backup coming up in his basement drain. Please check and advise resident Jimmy checked, not our issue	WT/SW	Y	AK	2/3/22	2:37 PM
2/4/2022	10:42 AM	Brandon Oliver	9523 Saric Drive	(219) 293-7415	Sewer Backup	sm	Resident has sewage backup in hi laundry room. He had a plumber out and said it was on our side. Please check and advise resident Checked the sewers, ours are clear. Advised the resident.	WT/SW	Y	AK	2/4/22	12:39 PM
2/7/2022	10:40 AM	Maria Gonzalez	8704 Cline Avenue	(219) 838-5554	Sewer Backup	kw	Basement is flooding, clean water. Called Jimmy to go check it. kw	WT/SW	Y	kw	2/7/22	11:44 AM
2/7/2022	11:36 AM	Chris	7948 Glenwood	(219) 678-8994	Other: See Notes	kw	He says he has called a couple of times, the street in front of his home has not been cleared of snow, but the rest of the street has been done???? Supposedly, there was no car parked there. Please check Jimmy and jeff are cleaning it up now, there was definitly a car there	Street	Y	AK	2/7/22	12:43 PM
2/7/2022	11:41 AM	Mail Carrier	2600 and 2700 block of 41st Pl		Other: See Notes	kw	Mail carrier is requesting these blocks to be curbed. She can't get to the mailboxes. Hauling it out today	Street	Y	AK	2/7/22	12:44 PM
2/8/2022	8:26 AM	resident	3342 North Drive		Other: See Notes	sm	resident asked if the snow plow could come back and plow the cul-de-sac because there is 3" of snow/slush Jeff is heading over there	Street	y	AK	2/8/22	1:40 PM
2/8/2022	9:28 AM	Maria Culbertson	3118 Ridge Road	(219) 616-0554	Street Light Out	sm	Resident said the street light is out by her house and leaves early in the morning for work …This light was on Midwesterns work order list sent on 1/19/2022, we will do a street light check tonight and comprise a new list for them.	Street	y	bkb		
2/8/2022	12:00 PM	Desiree Biro	2925 Highway Avenue		Other: See Notes	sm	Owner of One Dog at a Time asked if we can redo her curb area with the snow plow because her customers are tripping when they are walking up Jeff is going to get what he can	Street	Y	AK	2/9/22	10:58 AM
2/9/2022	7:45 AM	resident	2941 Parkway Drive	(219) 838-6197	Other: See Notes	sm	resident said her cul-de-sac still has a lot of snow and slush and wants to know if a plow can come back to clean it up Joe plowed up what he could	Street	Y	AK	2/9/22	9:18 AM
2/10/2022	4:11 PM	Ed Moreno	3215 Ridge Road	(219) 730-5106	Other: See Notes	kw	May be purchasing this home and needs info on going from well to public water. Please call	WT/SW	y	tg	2/11/22	
2/11/2022	9:46 AM	Dennis Palonis	3052 Lakeside Drive		Other: See Notes	sm	Resident said the storm sewer drain in front of his house is all ice and water is buiilding up. He wanted to know if someone can come out to remove the ice. (the drain is about 4ft east of his driveway) Adam and Chris will head over and clear it. Resident pushed all his driveway snow onto the basin, that's why it is clogged.	WT/SW	Y	AK	2/11/22	10:17 AM
2/11/2022	1:00 PM	resident	3300 block of Laporte		Street Light Out	sm	resident said the street light is out at the 3300 block of Laporte Reported it on Nipsco's website	Street	Y	kw	2/11/22	3:50 PM
2/15/2022	9:48 AM	Roxanne	8221 Grace Place	219-923-1525	Other: See Notes	sm	storm drain is covered in ice and resident wants someone to come and clear the ice and snow so it doen't flood..Catch basin is exposed on Grace St and we will check it again tomorrow…There was AT&T trucks parked over it at the time.	Street	y	bkb		
2/15/2022	12:44 PM	resident	3104 Franklin		Other: See Notes	sm	storm drain is covered in ice and resident wants someone to come and clear the ice and snow so it doen't flood..Basin at 3110 Franklin is clear of ice and snow will check tomorrow as well.	Street	y	bkb		
2/15/2022	1:40 PM	Cory - TLC Plumbing	2244 45th Street - Stracks	(219) 922-6214	Water On/Off Req.	sm	Cory will be doing some work at Strack's and needs the water off at 7:45am on Wednesday Feb. 16th…Sent Matt	WT/SW	y	bkb		
2/16/2022	10:00 AM	Mike - Highland High Sch	9135 Erie Street	(219) 741-8949	Water Pressure	sm	Mike said they have very low water pressure and would like someone to come and check. Call Mike before you go so he can meet you at Door R (receiving dock) by the girls softball field..Problem was in the High School.	WT/SW	y	bkb		
2/16/2022	10:42 AM	Michelle	8148 5th Street	(219) 614-7926	Sign down/damaged	sm	Resident said the stop sign at the corner of 5th Steet and Duluth by her house is falling off the post - resident is afraid it might damage something because of the high winds…Dennis will check it	Street	y	bkb		
2/16/2022	11:00 AM	resident	3501 Duluth Place		Other: See Notes	sm	storm drain at the corner of Duluth Pl and Johnston Street is covered in ice and resident wants someone to come out and clear the ice so it doesn't flood..All 3 catch basins are exposed.	WT/SW	y	bkb		
2/16/2022	3:20 PM	Tom Barrins	9240 Southmoor Avenue	(219) 923-2371	Water Break	sm	Resident said he thinks there is a water leak, there is water coming up by the sidewalk by the driveway. Please check and advise..Per Matt and Bob, No Leak, Snow Melt	WT/SW	y	bkb		
2/17/2022	9:00 AM	Daniel Vanek	8360 Liable Road	(219) 677-2127	Water Break	sm	Resident thinks he has a water main break in his backyard, its about a 1/2 acre of water…Just rain and Snow melt.	WT/SW	y	bkb		
2/17/2022	9:45 AM	Barbara Jurievic	9027 Cottage Grove Avenue	(219) 201-3239	Drainage Issues	sm	resident said the storm drain is not draining…Taken care of	WT/SW	y	bkb		
2/17/2022	9:50 AM	Gina Holdan	3120 97th Place	(219) 924-3239	Drainage Issues	sm	storm drain is clogged and it is flooding..taken care of.	WT/SW	y	bkb		
2/17/2022	1:45 PM	Woodys Garage	2943 Highway Avenue		Other: See Notes	sm	the high school banner hanging on Highway Avenue in front of Woodys is not attached at the bottom..Kevin and Tim removed it.	Street	y	bkb		
2/18/2022	8:54 AM		2400 Block of Clough		Other: See Notes	kw	Asking if a plow can come back down this street. Who ever plowed it last night left approx. 2 ft strip down the middle of the road..Dennis will check it out.	Street	y	bkb		
2/18/2022	9:25 AM	Karen Rothe	9040 Grace Street	(219) 201-4274	Sewer Backup	sm	resident has sewage backup coming up in her basement please check and advise resident..Resident problem per Dan	WT/SW	y	bkb		
2/18/2022	9:55 AM	Anthea Morgan	9411 Ellen	(219) 924-1813	Other: See Notes	sm	resident said the snow plow left a mound of snow by her driveway, her house is on the curve, wants to know if a plow can come back because she doesn't think she can get out of her driveway..Taken care of.	Street	y	bkb		
2/18/2022	10:35 AM	resident	Liable & Franklin		Other: See Notes	sm	resident said a tree fell just east on the north side of that intersection and is sticking out on the road, afraid that a car might hit it…Its not a problem.	Street	y	bkb		
2/22/2022	1:38 PM	Don Wojnicz	2815 Eder Street	(219) 923-4022	Drainage Issues	sm	Resident said the storm drain is clogged up because it is not draining, there is a big puddle has been jetted	WT/SW	y	tg	2/22/22	

2/22/2022	2:50 PM	Miguel Campos	3024 100th Place	(219) 670-5276	Drainage Issues	sm	Resident said there is backup in his backyard. Please check and advise resident Dan and Bob are going to check it is a water leak going to repair onwed. Morning	WT/SW				
2/22/2022	4:00 AM	John Speakman	8344 Liable Road	(219) 682-8908	Water On/Off Req.	sm	Resident needs his water shut off because he has a plumber coming to repair a leak Matt took care of this	WT/SW	y	matt	2/22/22	
2/23/2022	7:55 AM	resident	Cline & Wirth		Other: See Notes	sm	Resident said the snow plow knocked over the delineator at the southwest corner of Cline and Wirth and would like someone to fix it Brian will look at it Monday, Gave to Sean and Dennis.	Street	y	bkb		
2/23/2022	10:45 AM	RESIDENT	100TH St & 5th St		Other: See Notes	sm	resident said there is ceramic tile in the street that must have fallen out of a truck tim/brenden cleaned it up	Street	y	tg	2/23/22	
2/24/2022	9:15 AM	resident	Parrish Avenue		Other: See Notes	sm	resident said it looks like someome dumped rocks on Parrish going North between Condit and Garfield...Cleaned up and cold patched.	Street	y	bkb		
2/25/2022	8:08 AM	Jeff Grzybow	3205 Parrish	(219) 313-6471	Pot Hole	sm	Resident said there is a big pot hole in front of his house...No such address, but found one on Parrish b/t Garfield and Franklin and filled.	Street	y	bkb		
2/28/2022	2:08 PM		2nd St Alley/Highway and Condit		Pot Hole	kw	Alley has large pot holes...Sent Tim and Brendan with cold patch	Street	y	bkb		
3/1/2022	3:17 PM	Kenneth Broholm	8416 Grace Street	(708) 990-5479	Dead Tree/Status?	sm	Resident thinks the tree in the parkway is dead. Please check and advise. To early in the season to tell if its dead	Tim	y	tg		
3/1/2022	3:37 PM	Jacquelyn Jiminez	3424 Ross Place	(219) 765-4201	Sewer Backup	sm	Resident has sewage backup in her toilet and floor drain in her basement Roto Rooter was there and said it is on our side Please check and advise Jimmy and Kyle checked and took care of her. Jetted and vacumed our line.	WT/SW	Y	AK	3/2/22	7:11 AM
3/2/2022	2:21 PM	Trevor	3025 Highway Avenue	(219) 677-1240	Sign down/damaged	sm	1 handicap sign in front of Our Lady of Grace was knocked over from the plow and 1 handicap sign is not sturdy and moving...Gave to Jeff	Street	y	bkb		
3/3/2022	9:25 AM	Clive Morgan	9022 Kleinman	(708) 271-2500	Water Break	sm	resident said he has a water leak by his main driveway Called in locates, it will be fixed shortly	WT/SW	y	AK	3/3/22	xc
3/3/2022	10:37 AM	Lisa Symns	3129 Lois Place	(219) 670-5312	Dead Tree/Status?	sm	Resident said the tree in the parkway is dead Please check and advise. The other tree was taken down but the stump was not removed The stump was not ground because the resident would never move the car parked next to it	Tim	y	tg		
3/7/2022	9:06 AM	David Metcalf	9617 Spring St	(219) 895-2466	Locate Lines/B-box	kw	Resident is having inside problems and a plumber is coming out. Needs bbox located...Kyle will get it.	WT/SW	y	bkb		
3/7/2022	9:31 AM	Louis Bodnar	2713 Lincoln Street	(630) 816-4148	Water Break	sm	Resident thinks there is is a water main break in his front yard about 6' from the sidewalk...no leak found om our side per Kyle.	WT/SW	y	bkb		
3/7/2022	10:58 AM	William Finke	3539 Condit	(219) 838-2729	Sign down/damaged	sm	Resident said the NO THRU TRAFFIC sign has been defaced and would like it replaced. The sign is at the alley on Johnston between Garfield and Condit..We will check it out.	Street	y	bkb		
3/8/2022	9:42 AM	Robert	7951 Richard Street	(219) 513-8114	Tree/Branch Issues	sm	Big branch broke and is hanging from a tree in the parkway (from the wind) resident is afraid it is going to fall and hurt someone..Taken care of.	Street	y	bkb		
3/8/2022	10:17 AM	resident	3325 42nd Street	(225) 413-9680	Leaves Pickup	sm	resident has bagged leaves to be picked up...Gave to Jeff & Dennis	Street	y	bkb		
3/8/2022	11:36 AM	Cathy Shezchenko	3113 100th Pl	(219) 718-0311	Dead Tree/Status?	kw	Resident has large tree in the parkway that has branches constantly falling. Her son's car has been damaged. Please check status of tree and let the resident know the findings. If it is not dead, resident would like an application to remove it.	Tim	y	tg		
3/8/2022	1:43 PM	resident	2717 37th Street		Leaves Pickup	sm	resident has bagged leaves to be picked up...Jeff & Dennis will get them.	Street	y	bkb		
3/8/2022	2:30 PM	Karen	9123 Prairie Avenue	(219) 776-4086	Tree/Branch Issues	sm	resident has a big branch from the tree in the parkway that fell down from the wind...Picked up	Street	y	bkb		
3/8/2022	2:49 PM	resident	3425 Franklin Street		Tree/Branch Issues	sm	resident has a big branch to be picked up...Picked up	Street	y	bkb		
3/9/2022	8:46 AM	resident	2636 Duluth Street		Tree/Branch Issues	sm	resident has a big branch to be picked up...Picked up.	Street	y	bkb		
3/11/2022	9:00 AM	Megan Boender	10040 Kennedy Avenue	(708) 220-0483	Other: See Notes	sm	Resident is requesting info on how to get a tree from the town to be planted in her parkway resident is on list for trees	Tim	y	tg		
3/11/2022	12:10 PM	Donald Scheidt	8026 Spruce St	(219) 789-2354	Dead Tree/Status?	kw	Resident has 2 maples that she would like removed and replaced with trees that we get from the tree board. She doesn't know if they are completely dead. Please check	Tim	y	tg		
3/11/2022	12:12 PM	Donald Scheidt	8026 Spruce St	(219) 789-2354	Sidewalk/Curb Issue	kw	Resident would like an estimate on replacing approx. 4 lifted squares of sidewalk.	Street	y	bkb		
3/14/2022	9:57 AM	Helen Hughes	9218 Grace Place	(219) 924-7446	Other: See Notes	sm	Resident said when the snow plow came by last time it loosened the concrete/blacktop by the curb in front of her house and pushed some of it in the parkway. She wants someone to come out and clean it up...Crew has been sent to clean up.	Street	y	bkb		
3/15/2022	8:31 AM	Bret Rindoks	2933 Parkway Drive	(219) 588-1794	Other: See Notes	sm	Resident wants to get his apron redone. He would like to talk to someone about his options Please advise resident	Street	y	bkb		
3/15/2022	11:16 AM	resident	8002 Sycamore Ave		Leaves Pickup	sm	resident has a bag of leaves to be picked up...Dylan will get it.	Street	y	bkb		
3/15/2022	1:55 PM	resident	8945 Richard Street		Leaves Pickup	sm	resident has bagged leaves to be picked up..Jeff and Kyle will get them.	Street	y	bkb		
3/15/2022	3:53 PM	Dawn Malangoni	3316 Franklin St	(219) 689-7107	Leaves Pickup	kw	resident has approx. 4 bags of yard waste out front for pickup...Gave to Dylan	Street	y	bkb		
3/15/2022	3:58 PM	Maria/Olson Properties	3044 Glenwood	(219) 487-3632	Water On/Off Req.	kw	Current faucet issue with water continually running per property manager. Send Kyle to shut it off 3/15/22 @3:50 pm. They will call back when the repair is made and they want the water back on	WT/SW	y	kw		
3/16/2022	10:40 AM	resident	Express Drive		Pot Hole	sm	resident said there are 6 big pot holes (2 ft diameter and 1 foot deep) and would like someone to come by today to cold patch them...Gave to Dylan and Kyle.	Street	y	bkb		
3/16/2022	12:03 PM	Candace Slayton	8435 Grace St	(219) 313-0085	Locate Lines/B-box	kw	Plumber was there to fix inside leaking shutoff valve and could not locate the bbox. Please locate. Gave to Kyle	WT/SW	y	kw		
3/16/2022	12:35 PM	David Hanson	3935 Wirth Road	(219) 923-0477	Other: See Notes	sm	Resident would like a street sweeper to come by his house. Brian I forwarded the voicemail to you (it's very long)...LOL, I listened to it and Pete will go by with the sweeper.	Street	y	bkb		
3/16/2022	2:35 PM	Thoung Cap	2716 Condit	(219) 363-6551	Other: See Notes	sm	Resident said the storm drain is filled with debris and needs to be cleaned out Will give this to Jimmy today	WT/SW	Y	AK	3/17/22	7:16 AM
3/17/2022	9:38 AM	resident	3525 Highway Avenue		Leaves Pickup	sm	resident has bagged leaves to be picked up..Gave to Jeff	Street	y	bkb		
3/17/2022	10:12 AM	resident	8002 Sycamore Ave		Leaves Pickup	sm	resident has bagged leaves to be picked up..Gave to Tim and Brendan	Street	y	bkb		
3/17/2022	12:54 PM	Carol Nicholls	9125 Wildwood Drive	(219) 613-5184	Dead Tree/Status?	sm	Resident believes her tree is dead. Please check and advise	Tim				
3/18/2022	10:02 AM	Carol Plesha	9323 Ellen Drive	(219) 616-8128	Sidewalk/Curb Issue	sm	Resident wants information on the sidewalk replacement program. Her sidewalk is raised up. Please advise resident	Street	y	bkb		
3/18/2022	11:32 AM	Nick Sanajac	3051 Garfield	(219) 308-5180	Other: See Notes	sm	resident said the snow plow dragged rocks from the snowplow on his parkway and wants someone to come and clean it up...I'll add to the plow damage list for the next time.	Street	y	bkb		
3/18/2022	12:40 PM	Sandy Melton	9201 Spring Street	(219) 381-5023	Other: See Notes	SM	Resident said someone dumped a huge pile of trash on Martha Street (from Indianapolis east on Martha) where it dead ends by the tracks. She wants someone to come out and clean it up..Sent Brendan and Kyle	Street	y	bkb		
3/18/2022	1:24 PM	Leo / Carmen Cruz	2850 Franklin Avenue	(815) 210-7638	Dead Tree/Status?	sm	Resident said the tree in the parkway (4th & Franklin) is dead. The tree has big branches that keep falling down. Resident is afraid the tree is going to fall, and big branches keep falling off	Tim	y	tg		
3/18/2022	3:30 PM	resident	Wirth and Ohio		Other: See Notes	sm	Resident said there is standing water at the corner of Wirth RD and Ohio Place Debris on storm basin, Adam cleared it	WT/SW	Y	AK	3/21/22	7:09 AM
3/21/2022	9:01 AM	resident	2852 Parkway		Leaves Pickup	sm	resident has 16 bags of leaves to be picked up..Gave to Tim and Brendan.	Street	y	bkb		
3/21/2022	9:01 AM	resident	2828 Parkway		Leaves Pickup	sm	resident has 18 bags of leaves to be picked up..Gave to Tim and Brendan.	Street	y	bkb		
3/21/2022	9:26 AM	Nick- Zandstra's	10202 Kennedy Avenue	(219) 924-1095	Water Pressure	sm	Nick said they have very low water pressure and wants someone to come out to check Advised them to get their backlflow device serviced right away	WT/SW	Y	AK	3/21/22	9:38 AM
3/21/2022	9:55 AM	Tim Chant	3934 Jewett	(219) 588-8294	Leaves Pickup	sm	resident has bag of yard waste to be picked up...Gave to Tim and Brendan.	Street	y	bkb		
3/21/2022	10:25 AM	resident	8342 Gordon Drive		Leaves Pickup	sm	resident has about 4 bags of leaves to be picked up (anytime after 11:00am)...Gave to Tim and Brendan	Street	y	bkb		
3/21/2022	1:00 PM	Beth Johnson	3415 Duluth Street	(219) 595-5259	Other: See Notes	sm	resident called and wants to know when the restoration will be done in her back yard from the water main break Called her	WT/SW	Y	AK	3/21/20221:12 PM	
3/21/2022	1:17 PM	resident	Richard St & Kennedy Avenue		Other: See Notes	sm	Resident asked if the street sweeper could come by because there is a lot of debris on the street from the accident on Saturday ...Accident I know about was at 43rd & Kennedy and Pete went there first thing this morning with the sweeper.	Street	y	bkb		
3/21/2022	3:38 PM	Lidia	9309 Farmer Dr	(219) 922-9165	Dead Tree/Status?	kw	Resident said tree is old and lifting sidewalk. Please check and see if it is dead and let resident know the findings	Tim	y	tg		
3/21/2022	3:56 PM	Jennifer Sheets	3534 43rd Street	(219) 671-9427	Dead Tree/Status?	sm	Call log 12/15/2021 Resident said the branches are falling off the tree now. Please check and advise	Tim	y	tg		
3/21/2022	3:55 PM	Joey	3520 41st Pl	(312) 439-0066	Drainage Issues	kw	Resident is getting back up in the basement. Please check mains and let him know if he needs to get a plumber Kyle is checking the mains and will advise the resident	WT/SW	Y	AK	3/22/22	8:30 AM
3/21/2022	4:00 PM	Kevin	2618 Wicker	(773) 510-5627	Leaves Pickup	sm	resident has bagged leaves to be picked up..Gave to Dylan and Kyle.	Street	y	bkb		
3/22/2022	7:49 AM	David Jacobs	8844 Woodward		Leaves Pickup	sm	Resident has bagged leaves to be picked up. There are also 3 other neighbors that have bagged leaves out to be picked up...Gave to Dylan and Kyle.	Street	y	bkb		
3/22/2022	8:15 AM	resident	Ridge Road by Main Square		Street Light Out	sm	Street lights are out on pole # D27 and D28...Ok	Street	y	bkb		
3/22/2022	10:02 AM	resident	3232 Ridge Road		Leaves Pickup	sm	resident has bagged leaves to be picked up..Gave to Dylan and Kyle.	Street	y	bkb		
3/22/2022	10:03 AM	resident	9544 Hook Street		Leaves Pickup	sm	resident has bagged leaves to be picked up..Gave to Dylan and Kyle.	Street	y	bkb		
3/22/2022	10:23 AM	resident	2301 Ridgewood	(219) 809-5541	Leaves Pickup	sm	resident has bagged leaves..Gave to Dylan and Kyle	Street	y	bkb		
3/22/2022	12:52 PM		Garfield between Kennedy and Henry		Pot Hole	kw	Lots of potholes, wants to know if they can be filled...Gave to Tim and Brendan	Street	y	bkb		
3/22/2022	1:03 PM	Karen Larson	9410 Forrest Drive	(352) 223-8184	Sidewalk/Curb Issue	sm	Resident would like information on the sidewalk replacement program. Please advise resident...Called resident and left a message.	Street	y	bkb		
3/22/2022	2:00 PM	resident	3029 Duluth Street		Leaves Pickup	sm	Resident has bagged leaves to be picked up...Gave to Dylan	Street	y	bkb		
3/27/2022	2:00 AM	resident	3027 Duluth Street		Leaves Pickup	sm	Resident has bagged leaves to be picked up..Gave to Dylan and Kyle.	Street	y	bkb		
3/22/2022	3:03 PM	Lynea Lytle	3528 Laverne Drive	(219) 313-1263	Pot Hole	sm	Resident has pot holes in front of her house and at the corner of Arbor Hill Drive and Laverne Drive...Gave to Tim and Brendan	Street	y	bkb		
3/22/2022	3:05 PM	Lynea Lytle	3528 Laverne Drive	(219) 313-1263	Other: See Notes	sm	Resident wants to know if Laverne Drive is on the list to get repaved. Please advise resident...Talked to resident.	Street	y	bkb		

3/23/2022	7:45 AM	Mike	9803 Parkway Drive	(219) 614-4578	Sewer Backup	sm	Resident said she has sewer backup coming in her condo and could we send someone to check...Sent Bob and Dan NOT OUR PROBLEM THE SERVICE IS FULL OF WIPES	WT/SW	y	bkb		
3/23/2022	9:39 AM	resident	3405 Jewett Avenue		Other: See Notes	sm	resident said a big branch fell down from a tree in the parkway (by the stop sign)..Sent Dylan and Kyle	Street	y	bkb		
3/23/2022	10:21 AM	Mary Ann	9911 Kennedy	(219) 384-6770	Other: See Notes	kw	Part of curb is missing approx. 2 feet ...I will take a look at it.	Street	y	bkb		
3/23/2022	1:51 PM	resident	10306 Kennedy Avenue		Street Light Out	sm	the light is directly across the street from their house..Ok	Street	y	bkb		
3/24/2022	7:49 AM	Michael Sons	2934 Strong Street	(219) 838-5592	Other: See Notes	sm	Resident has water backup in his laundry tub, he had roto rooter come out and they said they hit sand and dirt on our side. Please advise resident He is getting his line televised tommorrow and will let me know where the line is collapsed.	WT/SW	Y	AK	3/24/22	12:28 PM
3/24/2022	8:03 AM	resident	Ridgewood and Osborne		Sign down/damaged	sm	reident said the street sign at the corner of Ridgewood and Osborne is slanted..Ok	Street	y	bkb		
3/24/2022	12:00 AM	Lisa Symns	3129 Lois Place	(219) 670-5312	Dead Tree/Status?	sm	Resident said the tree in the parkway is dead Please check and advise. The other tree was taken down but the stump was not removed the stump was not ground because the resident would never move the car parked next to it called back asking if we have looked at tree	Tim	y	tg		
3/24/2022	1:36 PM	Kathlene Petty	3429 Strong Place	(219) 923-4678	Leaves Pickup	sm	Resident has bagged leaves to be picked up Friday 3/25/22..Gave to Dylan and Kyle	Street	y	bkb		
3/24/2022	3:50 PM	resident	2940 Clough Ave		Other: See Notes	sm	Resident has a branch in the parkway that fell down from the wind to be picked up...Gave to Dylan and Kyle	Street	y	bkb		
3/28/2022	10:13 AM	Joe Obranovich	10322 Indianapolis Blvd	(708) 259-1294	Drainage Issues	sm	Standing water on the north side drainage ditch Cleared the ditch. It is flowing again	WT/SW	Y	AK	3/29/22	12:51 PM
3/29/2022	9:50 AM	Gail Austen	7909 Glenwood Street		Leaves Pickup	sm	resident has bagged leaves to be picked up...Gave to Jeff & Dennis	Street	y	bkb		
3/29/2022	10:27 AM	resident	8929 Southmoor		Leaves Pickup	sm	resident has bagged leaves to be picked up..Gave to Jeff and Dennis	Street	y	bkb		
3/29/2022	10:45 AM	Shelby - PD	3000 block of 45th Street		Pot Hole	sm	Shelby called and said there is a pot hole on the 3000 block of 45th Street...Sean and Brendan got it	Street	y	bkb		
3/29/2022	3:22 PM	resident	2716 41st Street		Other: See Notes	sm	Resident asked if the street sweeper could come by 41st Street, the west side of Kennedy, there is a lot of debris in the street...I'll let Pete know.	Street	y	bkb		
3/30/2022	10:00 AM	Sandra Buono	8143 W. 4th Place	(219) 588-0464	Other: See Notes	sm	Resident said we put dirt around the bbox and now it is sinking, she wants us to come back to put more dirt to take care of it. Please advise resident	WT/SW				
3/30/2022	10:05 AM	Christine Cash	9515 Kennedy Avenue	(219) 629-0460	Other: See Notes	sm	Resident wants to know if we can put more gravel in her alley. It starts at 43rd Street and dead ends. Please advise resident...Will take a look at it,	Street	y	bkb		
3/30/2022	12:30 PM	Carolyn Cizon	8403 Delaware Place	(219) 923-9356	Other: See Notes	sm	Resident said her parkway in front of her house is sinking and wants someone to come out and look at it. She also said the storm drain to the north of her is sinking. Please check and advise resident	WT/SW				
3/30/2022	2:05 PM	resident	3523 43rd street		Drainage Issues	sm	resident said the storm drain in front of her house is not draining	WT/SW				
3/30/2022	3:14 PM	resident	4th street and 101st		Drainage Issues	sm	resident said the storm drains are clogged and not draining at the corner of 4th St and 101st st	WT/SW				
								Street				

Call Log 2022

Call Log 2022

Date	Time	Resident Name	Address	Phone #	Nature of Call	Received by:	Notes	Dept	Resolved Y	By Whom	Date	Time
1/3/2022	9:00 AM	Linda Lawbaugh	3613 45th Street	(219) 924-9228	Mailbox damaged	sm	Resident said her mailbox was plowed over by our truck, She would like it replaced. Please advise resident Sean and Dylan are putting up a temp for her today. I spoke with her.	Street	Y	AK	1/4/22	8:08 AM
1/3/2022	9:30 AM	Don Dykstra	2146 Timberidge Court	(219) 924-8461	Other: See Notes	sm	Resident said the plow truck knocked down 3 panels of fence and he would like it repaired. He would like to talk to a supervisor, he can order the fence but wants to know the procedure to get reimbursed. Please advise resident We repaired it and the resident was notified.	Street	Y	AK	1/3/22	9:57 AM
1/4/2022	7:53 AM	resident	Hess Drive		Other: See Notes	sm	resident said Hess Drive is a sheet of ice and cars are sliding and almost hitting parked cars Pete salted it earlier today.	Street	Y	AK	1/4/22	9:46 AM
1/5/2022	10:00 AM	resident	9235 Prairie Avenue		Tree/Branch Issues	sm	Resident said a big branch fell from the tree in the parkway, could we pick it up..Picked up.	Street	y	bkb		
1/5/2022	10:05 AM	Valerie Rashid	2525 River Drive	(708) 676-4744	Sewer Backup	SM	Resident said she has sewage coming up in her shower and bubbling in her toilet Please advise resident Jimmy chekced and advised	WT/SW	Y	AK	1/5/22	12:30 PM
1/5/2022	2:00 PM	Georgette Luce	9235 Prairie Avenue	(219) 923-2109	Dead Tree/Status?	sm	resident believes both trees in the parkway are dead - please advise resident advised resident that we need to wait untill spring to verify if they are dead or not	Tim	y	tg	1/12/22	
1/7/2022	11:51 AM	Tammy Lopez	3912 Clough	(708) 845-6242	Dead Tree/Status?	kw	Resident believes the tree is splitting apart and dead there is one branch that looks like a truck hit it I will have sean cut it off	Tim	y	tg	1/12/22	
1/10/2022	12:10 PM		Downtown Highway Ave			kw	A handicap spot in front of a bible book store (same side of the road as Langel's) was not cleared of snow. Lady is pissed because she was trying to go to Langel's on Saturday night, is handicap, and had no spot available for her to park because of this. She informed me tons of pictures were taken and that this is unacceptable :) Sending Sean to check it...Dennis pushed it.	Street	y	bkb		
1/10/2022	2:00 PM		2605 Lincoln Street			sm	resident wants salt put down in front of her driveway because it is all ice driveway is on 1st street...Brendan laid some salt down.	Street	y	bkb		
10-Jan	3:45 PM	Daniel Vanek	8360 Liable Road	(219) 677-2127	Other: See Notes	sm	resident wants to know if there is a sewer line in front of his house please advise resident left a message informing resident there is NOT a san sewer in front of his property	WT/SW	y	tg	1/12/22	
1/11/2022	8:48 AM	Peggy Faught	9622 5th Place	(219) 688-5275	Sewer Backup	sm	Resident said she had Tiger Plumbing out for work and they said the liner is covering the hole for the discharge in the sewer line. She paid $465.00 to Tiger Plumbing and she wants reimbursed if this was the towns fault. She wants someone to come out and run the camera to check. Please advise resident Instituform accidently covered over this tap they are enroute to cut it out and pay the plumbing bill	WT/SW	y	tg		
1/11/2022	9:08 AM	resident	8815 Liable Road		Other: See Notes	sm	Resident has a big branch that fell and is in the parkway for pickup..Picked up.	Street	y	bkb		
1/11/2022	11:17 AM	resident			Street Light Out	sm	resident said the street light by 2031 Main Street is out..This is a Nipsco Pole, Nipsco notified.	Street	y	bkb		
1/11/2022	3:48 PM	Barb Ociepka	2033 Ramblewood Drive	(219) 922-0858	Pot Hole	sm	Resident said there is a huge pot hole on Main Street by Target going west before the railroad tracks. She said it is really dangerous and scratched her rim. Please advise resident..Brendan and Grant filled last night.	Street	y	bkb		
1/12/2022	1:26 PM	Katie Niemiec	3935 Wicker Avenue	(219) 895-0682	Sewer Backup	sm	Resident had water and sewage backup in the toilet and tub. She did have a plumber out to route it out and it helped but the plumber said she needs to get Highland out because something might be cracked. She would like someone to come out and run the camera to see if it is on our side. Please advise resident advised resident that we would televise our san sewer tomorrow on thursday,unable to televise on thursday because of cars in driveways I will have Dan try to get it on Monday the 17th 2022 Dan televised and there was NO problem with the sewer connection at the main	WT/SW	y	tg	1/12/22	
1/12/2022	3:01 PM	Maria Culbertson	3118 Ridge Road	(219) 616-0554	Street Light Out	sm	Resident said the street light to the right of her house is out..ok	Street	y	bkb		
1/12/2022	4:01 PM	Scott Oostman	2731 39th Place	(219) 712-3655	Water On/Off Req.	kw	Resident needs water off at 2:30 for plumber to replace valve, will call when he needs the water back on	WT/SW	Y			
1/13/2022	12:20 PM	Ron Hobbs	10124 4th Street	(219) 924-7135	Other: See Notes	sm	Resident said the plow truck plowed sod up on his sidewalk, which is now blocking his sidewalk. He wants someone to come out and take care of this so his sidewalk is not blocked It is the corner of 4th Street and 101st Place Gave to Dillon/Sean	Street	y	tg	1/13/22	
	11:15 AM	Bob Sexton	3031 97th Place	(219) 776-4929	Sidewalk/Curb Issue	sm	Resident would like to talk to someone about replacing his curb. Please advise resident	Street				
1/14/2022	1:50 PM		8820 2nd st		Other: See Notes	kw	This house was finaled back in June and we have not been able to shut off water because the bbox is broken. Can we please prioritize getting this one fixed. Someone is currently rehabbing the home. Doing this today	WT/SW	Y	AK	1/31/22	8:18 AM
1/18/2022	1:42 PM	resident	Entrance by Lincoln Center		Pot Hole	sm	Resident said there is a pot hole at the entrance of Lincoln Center at Lincoln Street Filled	Street	Y	AK	1/19/22	1:16 AM
1/18/2022	3:43 PM	James Szura	9342 Forrest Drive	(219) 680-6486	Sidewalk/Curb Issue	sm	Resident would like to have his sidewalk replaced and needs info on the sidewalk replacement program. Please advise resident...Talked to resident.	Street	y	bkb		
1/18/2022	3:45 PM	James Szura	9342 Forrest Drive	(219) 680-6486	Pot Hole	sm	Resident said there are pot holes on Forrest close to 41st Street and a pot hole on Kennedy and 44th Street going northbound in the right lane Filled	Street	Y	AK	1/19/22	1:16 AM
1/19/2022	9:02 AM	Debbie Holderman	8840 Osborne	(219) 923-7817	Sidewalk/Curb Issue	sm	Resident would like information on the sidewalk replacement program. Please advise resident..Talked to resident	Street	y	bkb		
1/21/2022	2:57 PM	building dept	2926 Strong Street		Other: See Notes	sm	building dept needs an inspection done on Monday 1/24/22 at 1:00pm 2926 Strong Street Open hole inspection for sewer repair..Matt did it.	WT/SW	y	bkb		
1/21/2022	3:00 PM	Danny George		(219) 924-4784	Other: See Notes	sm	Resident said his water is cloudy, he would like a call back from a supervisor about it	WT/SW				
1/24/2022	8:53 AM	Frank Bond	3003 Hess Dr	(219) 838-3729	Locate Lines/B-box	kw	Please locate bbox as soon as possible, resident needs a plumber to come in and change broken inside valve..Gave to Matt	WT/SW	y	bkb		
1/25/2022	9:05 AM	Stan Beasley	2805 44th Street	(708) 833-0741	Water Break	sm	resident called and said he thinks there is a water main break Gave to Brian	WT/SW	y	bkb		
1/25/2022	10:05 AM	Chris McDonough	2730 Ross Street	(708) 323-8435	Other: See Notes	SM	Resident wants to know if there was new water lines put in going to the house around 2005. He wants to replace the valve but would like to know about the lines first. Please advise resident	WT/SW				
1/25/2022	1:34 PM		10221 Birchwood Cirlce		Other: See Notes	kw	Resident's mailbox was plowed in and he can't get his medication ;) ..Gave to Dennis to check.	Street	y	bkb		
1/25/2022	2:05 PM	Hector - manager	9850 Indianapolis Blvd	(219) 961-9530	Water Break	sm	Hector, the GM from Drive Time said there is water and sand coming up from the sidewalk, grass and parking lot. Called Brian	WT/SW	y	bkb		
1/25/2022	2:21 PM	resident	3040 98th Place West		Other: See Notes	sm	resident asked if a plow can come back out because there is some snow in front of her driveway..Gave to Dennis to check.	Street	y	bkb		
1/26/2022	9:18 AM	resident	2000 Azalea Drive		Other: See Notes	sm	resident said his side of the street was not plowed and he has about a 6ft pile in front of his house , wants to know if the plow can come back through his street...it was plowed, just not as close to the curb that he would've liked...taken care of.	Street	y	bkb		
2/3/2022	8:57 AM	Tom - Meyers Plumbing	2166 45th Street	(219) 314-3362	Water On/Off Req.	sm	Tom would like someone to shut the water off at 8:00am at 2166 45th Street on Friday 2/4/22 Called and set it up with him. I will send someone first thing.	WT/SW	Y	AK	2/3/22	10:30 AM
2/3/2022	1:23 PM	Josh Scheeringa	2639 Clough	(219) 577-5802	Sewer Backup	sm	resident said he has sewage backup coming up in his basement drain. Please check and advise resident Jimmy checked, not our issue	WT/SW	Y	AK	2/3/22	2:37 PM
2/4/2022	10:42 AM	Brandon Oliver	9523 Saric Drive	(219) 293-7415	Sewer Backup	sm	Resident has sewage backup in hi laundry room. He had a plumber out and said it was on our side. Please check and advise resident Checked the sewers, ours are clear. Advised the resident.	WT/SW	Y	AK	2/4/22	12:39 PM
2/7/2022	10:40 AM	Maria Gonzalez	8704 Cline Avenue	(219) 838-5554	Sewer Backup	kw	Basement is flooding, clean water. Called Jimmy to go check it. kw	WT/SW	Y	kw	2/7/22	11:44 AM
2/7/2022	11:36 AM	Chris	7948 Glenwood	(219) 678-8994	Other: See Notes	kw	He says he has called a couple of times, the street in front of his home has not been cleared of snow, but the rest of the street has been done???? Supposedly, there was no car parked there. Please check Jimmy and jeff are cleaning it up now, there was definitly a car there	Street	Y	AK	2/7/22	12:43 PM

2/7/2022	11:41 AM	Mail Carrier	2600 and 2700 block of 41st Pl		Other: See Notes	kw	Mail carrier is requesting these blocks to be curbed. She can't get to the mailboxes. Hauling it out today	Street	Y	AK	2/7/22	12:44 PM
2/8/2022	8:26 AM	resident	3342 North Drive		Other: See Notes	sm	resident asked if the snow plow could come back and plow the cul-de-sac because there is 3" of snow/slush Jeff is heading over there	Street	y	AK	2/8/22	1:40 PM
2/8/2022	9:28 AM	Maria Culbertson	3118 Ridge Road	(219) 616-0554	Street Light Out	sm	Resident said the street light is out by her house and leaves early in the morning for work ...This light was on Midwesterns work order list sent on 1/19/2022, we will do a street light check tonight and comprise a new list for them.	Street	y	bkb		
2/8/2022	12:00 PM	Desiree Biro	2925 Highway Avenue		Other: See Notes	sm	Owner of One Dog at a Time asked if we can redo her curb area with the snow plow because her customers are tripping when they are walking up Jeff is going to get what he can	Street	Y	AK	2/9/22	10:58 AM
2/9/2022	7:45 AM	resident	2941 Parkway Drive	(219) 838-6197	Other: See Notes	sm	resident said her cul-de-sac still has a lot of snow and slush and wants to know if a plow can come back to clean it up Joe plowed up what he could	Street	Y	AK	2/9/22	9:18 AM
2/10/2022	4:11 PM	Ed Moreno	3215 Ridge Road	(219) 730-5106	Other: See Notes	kw	May be purchasing this home and needs info on going from well to public water. Please call	WT/SW	y	tg	2/11/22	
2/11/2022	9:46 AM	Dennis Palonis	3052 Lakeside Drive		Other: See Notes	sm	Resident said the storm sewer drain in front of his house is all ice and water is buiilding up. He wanted to know if someone can come out to remove the ice. (the drain is about 4ft east of his driveway) Adam and Chris will head over and clear it. Resident pushed all his driveway snow onto the basin, that's why it is clogged.	WT/SW	Y	AK	2/11/22	10:17 AM
2/11/2022	1:00 PM	resident	3300 block of Laporte		Street Light Out	sm	resident said the street light is out at the 3300 block of Laporte Reported it on Nipsco's website	Street	Y	kw	2/11/22	3:50 PM
2/15/2022	9:48 AM	Roxanne	8221 Grace Place	219-923-1525	Other: See Notes	sm	storm drain is covered in ice and resident wants someone to come and clear the ice and snow so it doen't flood..Catch basin is exposed on Grace St and we will check it again tomorrow...There was AT&T trucks parked over it at the time.	Street	y	bkb		
2/15/2022	12:44 PM	resident	3104 Franklin		Other: See Notes	sm	storm drain is covered in ice and resident wants someone to come and clear the ice and snow so it doen't flood..Basin at 3110 Franklin is clear of ice and snow will check tomorrow as well.	Street	y	bkb		
2/15/2022	1:40 PM	Cory - TLC Plumbing	2244 45th Street - Stracks	(219) 922-6214	Water On/Off Req.	sm	Cory will be doing some work at Strack's and needs the water off at 7:45am on Wednesday Feb. 16th...Sent Matt	WT/SW	y	bkb		
2/16/2022	10:00 AM	Mike - Highland High Sch	9135 Erie Street	(219) 741-8949	Water Pressure	sm	Mike said they have very low water pressure and would like someone to come and check. Call Mike before you go so he can meet you at Door R (receiving dock) by the girls softball field..Problem was in the High School.	WT/SW	y	bkb		
2/16/2022	10:42 AM	Michelle	8148 5th Street	(219) 614-7926	Sign down/damaged	sm	Resident said the stop sign at the corner of 5th Steet and Duluth by her house is falling off the post - resident is afraid it might damage something because of the high winds...Dennis will check it	Street	y	bkb		
2/16/2022	11:00 AM	resident	3501 Duluth Place		Other: See Notes	sm	storm drain at the corner of Duluth Pl and Johnston Street is covered in ice and resident wants someone to come out and clear the ice so it doesn't flood..All 3 catch basins are exposed.	WT/SW	y	bkb		
2/16/2022	3:20 PM	Tom Barrins	9240 Southmoor Avenue	(219) 923-2371	Water Break	sm	Resident said he thinks there is a water leak, there is water coming up by the sidewalk by the driveway. Please check and advise..Per Matt and Bob, No Leak, Snow Melt	WT/SW	y	bkb		
2/17/2022	9:00 AM	Daniel Vanek	8360 Liable Road	(219) 677-2127	Water Break	sm	Resident thinks he has a water main break in his backyard, its about a 1/2 acre of water...Just rain and Snow melt.	WT/SW	y	bkb		
2/17/2022	9:45 AM	Barbara Jurievic	9027 Cottage Grove Avenue	(219) 201-3239	Drainage Issues	sm	resident said the storm drain is not draining...Taken care of	WT/SW	y	bkb		
2/17/2022	9:50 AM	Gina Holdan	3120 97th Place	(219) 924-3239	Drainage Issues	sm	storm drain is clogged and it is flooding..taken care of.	WT/SW	y	bkb		
2/17/2022	1:45 PM	Woodys Garage	2943 Highway Avenue		Other: See Notes	sm	the high school banner hanging on Highway Avenue in front of Woodys is not attached at the bottom..Kevin and Tim removed it.	Street	y	bkb		
2/18/2022	8:54 AM		2400 Block of Clough		Other: See Notes	kw	Asking if a plow can come back down this street. Who ever plowed it last night left approx. 2 ft strip down the middle of the road..Dennis will check it out.	Street	y	bkb		
2/18/2022	9:25 AM	Karen Rothe	9040 Grace Street	(219) 201-4274	Sewer Backup	sm	resident has sewage backup coming up in her basement please check and advise resident..Resident problem per Dan	WT/SW	y	bkb		
2/18/2022	9:55 AM	Anthea Morgan	9411 Ellen	(219) 924-1813	Other: See Notes	sm	resident said the snow plow left a mound of snow by her driveway, her house is on the curve, wants to know if a plow can come back because she doesn't think she can get out of her driveway..Taken care of.	Street	y	bkb		
2/18/2022	10:35 AM	resident	Liable & Franklin		Other: See Notes	sm	resident said a tree fell just east on the north side of that intersection and is sticking out on the road, afraid that a car might hit it...Its not a problem.	Street	y	bkb		
2/22/2022	1:38 PM	Don Wojnicz	2815 Eder Street	(219) 923-4022	Drainage Issues	sm	Resident said the storm drain is clogged up because it is not draining, there is a big puddle has been jetted	WT/SW	y	tg	2/22/22	
2/22/2022	2:50 PM	Miguel Campos	3024 100th Place	(219) 670-5276	Drainage Issues	sm	Resident said there is backup in his backyard. Please check and advise resident Dan and Bob are going to check it is a water leak going to repair onwed. Morning	WT/SW				
2/22/2022	4:00 AM	John Speakman	8344 Liable Road	(219) 682-8908	Water On/Off Req.	sm	Resident needs his water shut off because he has a plumber coming to repair a leak Matt took care of this	WT/SW	y	matt	2/22/22	
2/23/2022	7:55 AM	resident	Cline & Wirth		Other: See Notes	sm	Resident said the snow plow knocked over the delineator at the southwest corner of Cline and Wirth and would like someone to fix it Brian will look at it Monday, Gave to Sean and Dennis.	Street	y	bkb		
2/23/2022	10:45 AM	RESIDENT	100TH St & 5th St		Other: See Notes	sm	resident said there is ceramic tile in the street that must have fallen out of a truck tim/brenden cleaned it up	Street	y	tg	2/23/22	
2/24/2022	9:15 AM	resident	Parrish Avenue		Other: See Notes	sm	resident said it looks like someome dumped rocks on Parrish going North between Condit and Garfield...Cleaned up and cold patched.	Street	y	bkb		
2/25/2022	8:08 AM	Jeff Grzybow	3205 Parrish	(219) 313-6471	Pot Hole	sm	Resident said there is a big pot hole in front of his house...No such address, but found one on Parrish b/t Garfield and Franklin and filled.	Street	y	bkb		
2/28/2022	2:08 PM		2nd St Alley/Highway and Condit		Pot Hole	kw	Alley has large pot holes...Sent Tim and Brendan with cold patch	Street	y	bkb		
3/1/2022	3:17 PM	Kenneth Broholm	8416 Grace Street	(708) 990-5479	Dead Tree/Status?	sm	Resident thinks the tree in the parkway is dead. Please check and advise. Tree is bad we will remove it	Tim	y	tg		
3/1/2022	3:37 PM	Jacquelyn Jiminez	3424 Ross Place	(219) 765-4201	Sewer Backup	sm	Resident has sewage backup in her toilet and floor drain in her basement Roto Rooter was there and said it is on our side Please check and advise Jimmy and Kyle checked and took care of her. Jetted and vacumed our line.	WT/SW	Y	AK	3/2/22	7:11 AM
3/2/2022	2:21 PM	Trevor	3025 Highway Avenue	(219) 677-1240	Sign down/damaged	sm	1 handicap sign in front of Our Lady of Grace was knocked over from the plow and 1 handicap sign is not sturdy and moving...Gave to Jeff	Street	y	bkb		
3/3/2022	9:25 AM	Clive Morgan	9022 Kleinman	(708) 271-2500	Water Break	sm	resident said he has a water leak by his main driveway Called in locates, it will be fixed shortly	WT/SW	y	AK	3/3/22	xc
3/3/2022	10:37 AM	Lisa Symns	3129 Lois Place	(219) 670-5312	Dead Tree/Status?	sm	Resident said the tree in the parkway is dead Please check and advise. The other tree was taken down but the stump was not removed the stump was not ground because the resident would never move the car parked next to it other tree is hollow so we will take it down told resident	Tim	y	tg		
3/7/2022	9:06 AM	David Metcalf	9617 Spring St	(219) 895-2466	Locate Lines/B-box	kw	Resident is having inside problems and a plumber is coming out. Needs bbox located...Kyle will get it.	WT/SW	y	bkb		
3/7/2022	9:31 AM	Louis Bodnar	2713 Lincoln Street	(630) 816-4148	Water Break	sm	Resident thinks there is is a water main break in his front yard about 6' from the sidewalk...no leak found om our side per Kyle.	WT/SW	y	bkb		
3/7/2022	10:58 AM	William Finke	3539 Condit	(219) 838-2729	Sign down/damaged	sm	Resident said the NO THRU TRAFFIC sign has been defaced and would like it replaced. The sign is at the alley on Johnston between Garfield and Condit..We will check it out.	Street	y	bkb		
3/8/2022	9:42 AM	Robert	7951 Richard Street	(219) 513-8114	Tree/Branch Issues	sm	Big branch broke and is hanging from a tree in the parkway (from the wind) resident is afraid it is going to fall and hurt someone..Taken care of.	Street	y	bkb		
3/8/2022	10:17 AM	resident	3325 42nd Street	(225) 413-9680	Leaves Pickup	sm	resident has bagged leaves to be picked up...Gave to Jeff & Dennis	Street	y	bkb		
3/8/2022	11:36 AM	Cathy Shezchenko	3113 100th Pl	(219) 718-0311	Dead Tree/Status?	kw	Resident has large tree in the parkway that has branches constantly falling. Her son's car has been damaged. Please check status of tree and let the resident know the findings. If it is not dead, resident would like an application to remove it tree is not bad enough for us to take down resident is going to have it removed	Tim	y	tg		
3/8/2022	1:43 PM	resident	2717 37th Street		Leaves Pickup	sm	resident has bagged leaves to be picked up...Jeff & Dennis will get them.	Street	y	bkb		
3/8/2022	2:30 PM	Karen	9123 Prairie Avenue	(219) 776-4086	Tree/Branch Issues	sm	resident has a big branch from the tree in the parkway that fell down from the wind...Picked up	Street	y	bkb		

3/8/2022	2:49 PM	resident	3425 Franklin Street		Tree/Branch Issues	sm	resident has a big branch to be picked up…Picked up	Street	y	bkb		
3/9/2022	8:46 AM	resident	2636 Duluth Street		Tree/Branch Issues	sm	resident has a big branch to be picked up…Picked up.	Street	y	bkb		
3/11/2022	9:00 AM	Megan Boender	10040 Kennedy Avenue	(708) 220-0483	Other: See Notes	sm	Resident is requesting info on how to get a tree from the town to be planted in her parkway resident is on list for trees	Tim	y	tg		
3/11/2022	12:10 PM	Donald Scheidt	8026 Spruce St	(219) 789-2354	Dead Tree/Status?	kw	Resident has 2 maples that she would like removed and replaced with trees that we get from the tree board. She doesn't know if they are completely dead. Please check we will take down the south tree	Tim	y	tg		
3/11/2022	12:12 PM	Donald Scheidt	8026 Spruce St	(219) 789-2354	Sidewalk/Curb Issue	kw	Resident would like an estimate on replacing approx. 4 lifted squares of sidewalk.	Street	y	bkb		
3/14/2022	9:57 AM	Helen Hughes	9218 Grace Place	(219) 924-7446	Other: See Notes	sm	Resident said when the snow plow came by last time it loosened the concrete/blacktop by the curb in front of her house and pushed some of it in the parkway. She wants someone to come out and clean it up…Crew has been sent to clean up.	Street	y	bkb		
3/15/2022	8:31 AM	Bret Rindoks	2933 Parkway Drive	(219) 588-1794	Other: See Notes	sm	Resident wants to get his apron redone. He would like to talk to someone about his options Please advise resident	Street	y	bkb		
3/15/2022	11:16 AM	resident	8002 Sycamore Ave		Leaves Pickup	sm	resident has a bag of leaves to be picked up…Dylan will get it.	Street	y	bkb		
3/15/2022	1:55 PM	resident	8945 Richard Street		Leaves Pickup	sm	resident has bagged leaves to be picked up..Jeff and Kyle will get them.	Street	y	bkb		
3/15/2022	3:53 PM	Dawn Malangoni	3316 Franklin St	(219) 689-7107	Leaves Pickup	kw	resident has approx. 4 bags of yard waste out front for pickup…Gave to Dylan	Street	y	bkb		
3/15/2022	3:58 PM	Maria/Olson Properties	3044 Glenwood	(219) 487-3632	Water On/Off Req.	kw	Current faucet issue with water continually running per property manager. Send Kyle to shut it off 3/15/22 @3:50 pm. They will call back when the repair is made and they want the water back on	WT/SW	y	kw		
3/16/2022	10:40 AM	resident	Express Drive		Pot Hole	sm	resident said there are 6 big pot holes (2 ft diameter and 1 foot deep) and would like someone to come by today to cold patch them…Gave to Dylan and Kyle.	Street	y	bkb		
3/16/2022	12:03 PM	Candace Slayton	8435 Grace St	(219) 313-0085	Locate Lines/B-box	kw	Plumber was there to fix inside leaking shutoff valve and could not locate the bbox. Please locate. Gave to Kyle	WT/SW	y	kw		
3/16/2022	12:35 PM	David Hanson	3935 Wirth Road	(219) 923-0477	Other: See Notes	sm	Resident would like a street sweeper to come by his house. Brian I forwarded the voicemail to you (it's very long)...LOL, I listened to it and Pete will go by with the sweeper.	Street	y	bkb		
3/16/2022	2:35 PM	Thoung Cap	2716 Condit	(219) 363-6551	Other: See Notes	sm	Resident said the storm drain is filled with debris and needs to be cleaned out Will give this to Jimmy today	WT/SW	Y	AK	3/17/22	7:16 AM
3/17/2022	9:38 AM	resident	3525 Highway Avenue		Leaves Pickup	sm	resident has bagged leaves to be picked up..Gave to Jeff	Street	y	bkb		
3/17/2022	10:12 AM	resident	8002 Sycamore Ave		Leaves Pickup	sm	resident has bagged leaves to be picked up..Gave to Tim and Brendan	Street	y	bkb		
3/17/2022	12:54 PM	Carol Nicholls	9125 Wildwood Drive	(219) 613-5184	Dead Tree/Status?	sm	Resident believes her tree is dead. Please check and advise tree is bad so we will remove it.	Tim	y	tg		
3/18/2022	10:02 AM	Carol Plesha	9323 Ellen Drive	(219) 616-8128	Sidewalk/Curb Issue	sm	Resident wants information on the sidewalk replacement program. Her sidewalk is raised up. Please advise resident	Street	y	bkb		
3/18/2022	11:32 AM	Nick Sanajac	3051 Garfield	(219) 308-5180	Other: See Notes	sm	resident said the snow plow dragged rocks from the snowplow on his parkway and wants someone to come and clean it up…I'll add to the plow damage list for the next time.	Street	y	bkb		
3/18/2022	12:40 PM	Sandy Melton	9201 Spring Street	(219) 381-5023	Other: See Notes	SM	Resident said someone dumped a huge pile of trash on Martha Street (from Indianapolis east on Martha) where it dead ends by the tracks. She wants someone to come out and clean it up..Sent Brendan and Kyle	Street	y	bkb		
3/18/2022	1:24 PM	Leo / Carmen Cruz	2850 Franklin Avenue	(815) 210-7638	Dead Tree/Status?	sm	Resident said the tree in the parkway (4th & Franklin) is dead. The tree has big branches that keep falling down. Resident is afraid the tree is going to fall, and big branches keep falling off tree is bad as well as the one on 4th street we will remove both	Tim	y	tg		
3/18/2022	3:30 PM	resident	Wirth and Ohio		Other: See Notes	sm	Resident said there is standing water at the corner of Wirth RD and Ohio Place Debris on storm basin, Adam cleared it	WT/SW	Y	AK	3/21/22	7:09 AM
3/21/2022	9:01 AM	resident	2852 Parkway		Leaves Pickup	sm	resident has 16 bags of leaves to be picked up..Gave to Tim and Brendan.	Street	y	bkb		
3/21/2022	9:01 AM	resident	2828 Parkway		Leaves Pickup	sm	resident has 18 bags of leaves to be picked up..Gave to Tim and Brendan.	Street	y	bkb		
3/21/2022	9:26 AM	Nick- Zandstra's	10202 Kennedy Avenue	(219) 924-1095	Water Pressure	sm	Nick said they have very low water pressure and wants someone to come out to check Advised them to get their backlflow device serviced right away	WT/SW	Y	AK	3/21/22	9:38 AM
3/21/2022	9:55 AM	Tim Chant	3934 Jewett	(219) 588-8294	Leaves Pickup	sm	resident has bag of yard waste to be picked up…Gave to Tim and Brendan.	Street	y	bkb		
3/21/2022	10:25 AM	resident	8342 Gordon Drive		Leaves Pickup	sm	resident has about 4 bags of leaves to be picked up (anytime after 11:00am)…Gave to Tim and Brendan	Street	y	bkb		
3/21/2022	1:00 PM	Beth Johnson	3415 Duluth Street	(219) 595-5259	Other: See Notes	sm	resident called and wants to know when the restoration will be done in her back yard from the water main break Called her	WT/SW	Y	AK	3/21/2022	1:12 PM
3/21/2022	1:17 PM	resident	Richard St & Kennedy Avenue		Other: See Notes	sm	Resident asked if the street sweeper could come by because there is a lot of debris on the street from the accident on Saturday …Accident I know about was at 43rd & Kennedy and Pete went there first thing this morning with the sweeper.	Street	y	bkb		
3/21/2022	3:38 PM	Lidia	9309 Farmer Dr	(219) 922-9165	Dead Tree/Status?	kw	Resident said tree is old and lifting sidewalk. Please check and see if it is dead and let resident know the findings not dead tree is not dead	Tim	y	tg		
3/21/2022	3:56 PM	Jennifer Sheets	3513 43rd street	(219) 671-9427	Dead Tree/Status?	sm	Call log 12/15/2021 Resident said the branches are falling off the tree now. Please check and advise we will remove tree	Tim	y	tg		
3/21/2022	3:55 PM	Joey	3520 41st Pl	(312) 439-0066	Drainage Issues	kw	Resident is getting back up in the basement. Please check mains and let him know if he needs to get a plumber Kyle is checking the mains and will advise the resident	WT/SW	Y	AK	3/22/22	8:30 AM
3/21/2022	4:00 PM	Kevin	2618 Wicker	(773) 510-5627	Leaves Pickup	sm	resident has bagged leaves to be picked up..Gave to Dylan and Kyle.	Street	y	bkb		
3/22/2022	7:49 AM	David Jacobs	8844 Woodward		Leaves Pickup	sm	Resident has bagged leaves to be picked up. There are also 3 other neighbors that have bagged leaves out to be picked up…Gave to Dylan and Kyle.	Street	y	bkb		
3/22/2022	8:15 AM	resident	Ridge Road by Main Square		Street Light Out	sm	Street lights are out on pole # D27 and D28…Ok	Street	y	bkb		
3/22/2022	10:02 AM	resident	3232 Ridge Road		Leaves Pickup	sm	resident has bagged leaves to be picked up..Gave to Dylan and Kyle.	Street	y	bkb		
3/22/2022	10:03 AM	resident	9544 Hook Street		Leaves Pickup	sm	resident has bagged leaves to be picked up..Gave to Dylan and Kyle.	Street	y	bkb		
3/22/2022	10:23 AM	resident	2301 Ridgewood	(219) 809-5541	Leaves Pickup	sm	resident has bagged leaves..Gave to Dylan and Kyle	Street	y	bkb		
3/22/2022	12:52 PM		Garfield between Kennedy and Henry		Pot Hole	kw	Lots of potholes, wants to know if they can be filled…Gave to Tim and Brendan	Street	y	bkb		
3/22/2022	1:03 PM	Karen Larson	9410 Forrest Drive	(352) 223-8184	Sidewalk/Curb Issue	sm	Resident would like information on the sidewalk replacement program. Please advise resident…Called resident and left a message.	Street	y	bkb		
3/22/2022	2:00 PM	resident	3029 Duluth Street		Leaves Pickup	sm	Resident has bagged leaves to be picked up…Gave to Dylan	Street	y	bkb		
3/27/2022	2:00 AM	resident	3027 Duluth Street		Leaves Pickup	sm	Resident has bagged leaves to be picked up..Gave to Dylan and Kyle.	Street	y	bkb		
3/22/2022	3:03 PM	Lynea Lytle	3528 Laverne Drive	(219) 313-1263	Pot Hole	sm	Resident has pot holes in front of her house and at the corner of Arbor Hill Drive and Laverne Drive…Gave to Tim and Brendan	Street	y	bkb		
3/22/2022	3:05 PM	Lynea Lytle	3528 Laverne Drive	(219) 313-1263	Other: See Notes	sm	Resident wants to know if Laverne Drive is on the list to get repaved. Please advise resident…Talked to resident.	Street	y	bkb		
3/23/2022	7:45 AM	Mike	9803 Parkway Drive	(219) 614-4578	Sewer Backup	sm	Resident said she has sewer backup coming in her condo and could we send someone to check…Sent Bob and Dan NOT OUR PROBLEM THE SERVICE IS FULL OF WIPES	WT/SW	y	bkb		
3/23/2022	9:39 AM	resident	3405 Jewett Avenue		Other: See Notes	sm	resident said a big branch fell down from a tree in the parkway (by the stop sign)..Sent Dylan and Kyle	Street	y	bkb		
3/23/2022	10:21 AM	Mary Ann	9911 Kennedy	(219) 384-6770	Other: See Notes	kw	Part of curb is missing approx. 2 feet …I will take a look at it.	Street	y	bkb		
3/23/2022	1:51 PM	resident	10306 Kennedy Avenue		Street Light Out	sm	the light is directly across the street from their house..Ok	Street	y	bkb		
3/24/2022	7:49 AM	Michael Sons	2934 Strong Street	(219) 838-5592	Other: See Notes	sm	Resident has water backup in his laundry tub, he had roto rooter come out and they said they hit sand and dirt on our side. Please advise resident He is getting his line televised tommorrow and will let me know where the line is collapsed.	WT/SW	Y	AK	3/24/22	12:28 PM
3/24/2022	8:03 AM	resident	Ridgewood and Osborne		Sign down/damaged	sm	reident said the street sign at the corner of Ridgewood and Osborne is slanted..Ok	Street	y	bkb		

3/24/2022	12:00 AM	Lisa Symns	3129 Lois Place	(219) 670-5312	Dead Tree/Status?	sm	Resident said the tree in the parkway is dead Please check and advise. The other tree was taken down but the stump was not removed the stump was not ground because the resident would never move the car parked next to it called back asking if we have looked at tree we will remove tree.	Tim	y	tg			
3/24/2022	1:36 PM	Kathlene Petty	3429 Strong Place	(219) 923-4678	Leaves Pickup	sm	Resident has bagged leaves to be picked up Friday 3/25/22..Gave to Dylan and Kyle	Street	y	bkb			
3/24/2022	3:50 PM	resident	2940 Clough Ave		Other: See Notes	sm	Resident has a branch in the parkway that fell down from the wind to be picked up…Gave to Dylan and Kyle	Street	y	bkb			
3/28/2022	10:13 AM	Joe Obranovich	10322 Indianapolis Blvd	(708) 259-1294	Drainage Issues	sm	Standing water on the north side drainage ditch Cleared the ditch. It is flowing again	WT/SW	Y	AK	3/29/22	12:51 PM	
3/29/2022	9:50 AM	Gail Austen	7909 Glenwood Street		Leaves Pickup	sm	resident has bagged leaves to be picked up…Gave to Jeff & Dennis	Street	y	bkb			
3/29/2022	10:27 AM	resident	8929 Southmoor		Leaves Pickup	sm	resident has bagged leaves to be picked up..Gave to Jeff and Dennis	Street	y	bkb			
3/29/2022	10:45 AM	Shelby - PD	3000 block of 45th Street		Pot Hole	sm	Shelby called and said there is a pot hole on the 3000 block of 45th Street…Sean and Brendan got it	Street	y	bkb			
3/29/2022	3:22 PM	resident	2716 41st Street		Other: See Notes	sm	Resident asked if the street sweeper could come by 41st Street, the west side of Kennedy, there is a lot of debris in the street…I'll let Pete know.	Street	y	bkb			
3/30/2022	10:00 AM	Sandra Buono	8143 W. 4th Place	(219) 588-0464	Other: See Notes	sm	Resident said we put dirt around the bbox and now it is sinking, she wants us to come back to put more dirt to take care of it. Please advise resident Called and left a message that they are already on my list	WT/SW	Y	AK	3/31/22	9:35 AM	
3/30/2022	10:05 AM	Christine Cash	9515 Kennedy Avenue	(219) 629-0460	Other: See Notes	sm	Resident wants to know if we can put more gravel in her alley. It starts at 43rd Street and dead ends. Please advise resident…Will take a look at it,	Street	y	bkb			
3/30/2022	12:30 PM	Carolyn Cizon	8403 Delaware Place	(219) 923-9356	Other: See Notes	sm	Resident said her parkway in front of her house is sinking and wants someone to come out and look at it. She also said the storm drain to the north of her is sinking. Per Bob and Dan, Sump pit pumps into the front yard and is probably what settled the yard. No sewer in the parkway there and the basin in the street is fine.	WT/SW	Y	AK	3/31/22	9:48 AM	
3/30/2022	2:05 PM	resident	3523 43rd street		Drainage Issues	sm	resident said the storm drain in front of her house is not draining Jimmy took care of it	WT/SW	y	tg			
3/30/2022	3:14 PM	resident	4th street and 101st		Drainage Issues	sm	resident said the storm drains are clogged and not draining at the corner of 4th St and 101st st Jimmy took care of it	WT/SW	y	tg			
3/31/2022	10:25 AM	resident	main st and Indianapolis		Pot Hole	sm	resident said there is a pot hole at main and indianapolis - east side / left turning lane…Taken care of.	Street	y	bkb			
3/31/2022	10:38 AM	Richard Salcedo	3916 Wirth Road	(219) 487-8323	Sewer Backup	sm	Resident said he has sewer backup in his basement - toilet and wants someone to come out and check. Please advise resident Our sewer main is clear. The gentleman was quite unpleasent towrds Jimmy.	WT/SW	Y	AK	3/31/22	10:59 AM	
3/31/2022	12:41 PM	Mike Franchimont	9135 Highland Street	(219) 798-4806	Dead Tree/Status?	sm	Resident believes the tree on the south side of the parkway is dead. Branches are falling off. Please check and advise tree is dead we will remove.	Tim	y	tg			
3/31/2022	3:20 PM	Ed Watkins	9225 Liable Road	(219) 776-4755	Drainage Issues	sm	Resident said his backyard is flooded and also his basement has water. Cleared basins in the park, not on our map	WT/SW	Y	AK	4/1/22	8:14 AM	
3/31/2022	3:30 AM	susan - Building Dept	2827 Eder		Other: See Notes	sm	Cleanout Inspection around 7:30am Friday morning 4/1/2022 - Kyle took care of it.	WT/SW	Y	AK	4/1/22	12:00 AM	8:14 AM
4/1/2022	1:13 PM		5th & Ross		Sign down/damaged	kw	Resident believes a street sign is missing at the intersection of 5th and Ross..Jeff will check it out.	Street	y	bkb			
4/1/2022	3:26 PM	Amy Leyendecker	9238 Grace Pl	(219) 670-9993	Locate Lines/B-box	kw	Locate bbox has plumber coming on Friday. Resident will call when she is ready for shut off. No B-box, they are moving the shed and will call us back then.	WT/SW	Y	AK	4/4/22	7:51 AM	
4/4/2022	10:20 AM	Noel Ledesma	3311 Garfield	(708) 668-3700	Drainage Issues	sm	Residents basement flooded and also smelled sewage on Sunday. Resident wants someonr to come out and check Please advise resident Jimmy cheked, not our issue. He advised the resident on the proper course of action.	WT/SW	Y	AK	4/4/22	10:50 AM	
4/4/2022	10:55 AM	Sarah Beagle	3744 41st Lane	(219) 798-4824	Sidewalk/Curb Issue	sm	Resident wants info on the sidewalk replacement program. Please advise resident…Will add to my list as I am waiting on my estimate cost forms to be finished by the printers.	Street	y	bkb			
4/4/2022	2:45 PM	resident	3521 41st Street		Leaves Pickup	sm	resident has bagged leaves to be picked up..Gave to Jeff	Street	y	bkb			
4/4/2022	2:45 PM	resident	3729 42nd Drive		Other: See Notes	sm	resident has a very large pile of branches to be picked up..Wednesdays route.	Street	y	bkb			
4/5/2022	7:50 AM	Dean Petty	2503 Wicker Park Drive	(219) 333-0272	Sewer Backup	sm	Resident has sewage backup in his house and coming out the clean out drain in the front yard every time the toilet is flushed Not our issue. Told him to get a plumber.	WT/SW	Y	AK	4/5/22	9:42 AM	
4/5/2022	9:55 AM	David Mazur	3824 Sandalwood Drive	(219) 644-5882	Other: See Notes	sm	resident has stumps to be picked up, he is on a corner lot..Will be done on Fridays with the Loader stop list.	Street	y	bkb			
4/5/2022	11:11 AM	resident	Georgetown Drive		Pot Hole	sm	resident said there are several pot holes on Georgetown Drive that need to be filled	Street					
4/5/2022	12:12 PM		9427 O'Day Dr		Leaves Pickup	kw	resident has leaves in brown bags for pickup…Jeff will get them.	Street	y	bkb			
4/5/2022	1:10 PM	Cynthia Rivas	8920 Kennedy Avenue	(219) 923-0417	Other: See Notes	sm	Cynthia called to say THANK YOU for picking up her leaves today and the snow plowing and the AWESOME JOB all you guys are doing for the town..Nice to hear.	Street	y	bkb			
4/5/2022	2:12 PM	Marilyn Majchrowicz	2035 Cedar Circle	(219) 433-2966	Water Pressure	sm	Resident said her water pressure is low mostly in the kitchen. Please check and advise Called and advised her on things to try, not our issue	WT/SW	Y	AK	4/6/22	10:58 AM	
4/5/2022	2:20 PM	Jessica Narkusic	3796 Highway Avenue	219-955-2314	Other: See Notes	sm	Resident wants to know if any tree's are left, she wants to plant one in the parkway. Please advise resident	Tim	y	tg			
4/5/2022	2:50 PM	Charles Zavesky	2145 Northwood Lane		Dead Tree/Status?	sm	Resident said he seen a small tree that was ran over and needs to be picked up. Its about 25 ft away from the fire hydrant…We will check it out.	Street	y	bkb			
4/5/2022	3:45 PM	susan - Building Dept	3247 Highway Avenue		Other: See Notes	sm	Sewer Repair Inspection - Wednesday 4/6/22 11:00am - 3247 Highway Avenue for Downing Plumbing Gave to Kyle	WT/SW	Y	AK	4/6/22	9:33 AM	
4/6/2022	7:55 AM	Joan Abatie	3416 Glenwood Street	(219) 923-6072	Other: See Notes	sm	Resident said we removed the dead tree in her parkway a couple of years ago and wants to have another tree planted. She wants to know if any free trees are left. Please advise resident	Tim	y	tg			
4/6/2022	12:40 PM		8937 Arbor Hill Dr		Leaves Pickup	kw	Resident will have leaves raked to the parkway tonight..Gave to Tim and Dylan	Street	y	bkb			
4/6/2022	1:25 PM		2430 Ridge Road		Leaves Pickup	sm	Resident has a huge pile of leaves to be picked up…Gave to Tim and Dylan	Street	y	bkb			
4/6/2022	3:54 PM	Tim Stacy	3729 42nd Drive	(219) 902-8362	Branches Missed	sm	call log 4/4/2022 Resident called back and said only 20 percent of his branches were picked up today and wants to know why all of them were not picked up. He said he wants to be first on the list to be picked up Thursday morning. Also wanted to talk to a supervisor so I transferred him back to Brian...Brendan will get them today.	Street	y	bkb			
4/7/2022	10:23 AM	resident	9247 Grace Street		Branches Missed	sm	resident said his branches were missed yesterday and wants them picked up…Picked up.	Street	y	bkb			
4/7/2022	10:25 AM	Lucy Wilson	9607 Blvd Drive	(219) 934-0385	Restorations	sm	Resident wants to know when the restoration will be done on the corner by the sidewalk,. She said that someone was supposed to come out and put seed down. Please advise resident..This needs to be given to Derek. This is a street/corner from the CCMG paving	Street	y	bkb			
4/8/2022	11:06 AM	Suzanne Djukic	3409 41st Place	(219) 384-4031	Drainage Issues	sm	Resident's daughter said that the backyard floods every time it rains and they have to pump it out to the front. Resident wants to know if someone can come by today to check. Daughter is only in town until Monday morning. Resident would like a phone call back from a supervisor. Please check and advise Talked to her	WT/SW	Y	AK	4/8/22	1:06 PM	
4/11/2022	8:35 AM		3325 42nd Street		Leaves Pickup	kw	resident has bagged leaves and yard waste for pickup…Gave to Tim	Street	y	bkb			
4/11/2022	10:20 AM	resident	3348 North Drive		Leaves Pickup	sm	resident has leaves in the parkway to be picked up..Gave to Tim	Street	y	bkb			
4/11/2022	11:00 AM	Fern Shadoan	2654 38th Street	(219) 923-0458	Sewer Backup	sm	Resident said she has sewage backup in her basement and wants us to come and check our side. Please advise resident Our mains are clear.	WT/SW	Y	AK	4/11/22	1:46 PM	
4/11/2022	11:15 AM	resident	2251 Oakdale		Leaves Pickup	sm	Resident has leaves in the parkway to be picked up..Gave to Tim	Street	y	bkb			
4/11/2022	12:09 PM		8919 Arbor Hill		Leaves Pickup	kw	Resident has loose leaves in the parkway for pick up..Gave to Tim	Street	y	bkb			

4/12/2022	7:30 AM	Krista Benni	2632 38th Street		Water On/Off Req.	sm	Resident is having a plumber to do some work Thursday 4/14/22 and needs the water shut off at 7:45am Kyle has it	WT/SW	Y	AK	4/13/22	12:55 PM	
4/12/2022	9:50 AM	Steiner	Teakwood Circle		Other: See Notes	sm	Resident said there is glass on the street in Teakwood Circle cul-de-sac ...pete will get it.	Street	y	bkb			
4/12/2022	1:30 PM	Ashley McMahon		(219) 670-8498	Other: See Notes	sm	resident would like to talk to someone regarding the sidewalk replacement program. I spoke to Ashley, she had paid for a road cut permit yesterday and I explained to her the way the sidewalk replacement program works. She was just inquiring if they did the concrete work themselves if we would reimburse them. They are on a deadline to have the work done and are going to just continue on their own.	Street	y	kw			
4/12/2022	1:41 PM	Scott Oostman	2731 39th Place	(219) 712-3655	Sidewalk/Curb Issue	sm	We replaced the water main in his front yard and he wants an update on when we will be out to replace the sidewalk Please advise resident...Talked to resident.	Street	y	bkb			
4/12/2022	2:35 PM	Dan Cavanaugh	8216 Kennedy Avenue	(219) 374-8180	Pot Hole	sm	Resident said there are huge pot holes in the alley and wants to know if the alley is on the list to get repaved. Please check and advise	Street	y	bkb			
4/13/2022	8:15 AM	Julie Dernula	2048 Martha Street	(219) 838-3738	Dead Tree/Status?	sm	Resident said the tree in the parkway is dead (corner house-tree is on Idlewild) Please check and advise resident dead we will remove it	Tim	y	tg			
4/13/2022	9:50 AM	resident	3621 Blvd Drive		Leaves Pickup	sm	resident has paper bagged leaves to be picked up..Gave to Tim and Kyle	Street	y	bkb			
4/13/2022	10:10 AM	Troy Nagle	3213 O"Day Drive	(708) 870-1230	Dead Tree/Status?	sm	Resident said the tree in the parkway is dead. Please check and advise resident tree is not dead	Tim	y	tg			
4/13/2022	10:27 AM	Jeffrey Ward	9008 Hess Drive		Leaves Pickup	sm	Resident has leaves to be picked up (not bagged)...Gave to Tim and Kyle	Street	y	bkb			
4/14/2022	11:06 AM	Sandra Hasier	3201 Glenwood	(219) 972-1261	Restorations	sm	Resident said there was restoration done at the northeast corner of Glenwood and Parrish but there is not enough dirt and the straw blew away. She wants someone to come back out and redo it...This would be part of CCMG ...will need to let Derek know.	Street	y	bkb			
4/14/2022	1:28 PM	Shameka Kunte	2643 Parkway Drive	(708) 296-3426	Other: See Notes	sm	Resident said there is a big bump in the street right before her driveway. She wants to know if it can be fixed....I will take a look at it.	Street	y	bkb			
4/14/2022	3:09 PM	Chuck Wehmer	3903 Wicker Ave	(219) 986-0668	Dead Tree/Status?	kw	Resident would like the tree checked, it is dropping lots of large branches. Please check and advise we will remove tree	Tim	y	tg			
4/18/2022	12:40 PM	Goubeaux	Kennedy & 39th Place	(219) 789-2703	Restorations	sm	Resident said at the corner of Kennedy and 39th Place (north corner) needs dirt to fill in where the work was done there...Another CCMG project that was done by Reith Reilly	Street	y	bkb			
4/19/2022	9:35 AM	Katarina Sibova	8951 Lawndale Street	(219) 256-6783	Dead Tree/Status?	sm	Resident said her trees in the parkway have a diseace and branches are constantly falling off. She wants someone to come out and look at them. She is also afraid someone will get hurt from the branches falling. Please check and advise resident it is an ugly tree but not dead	Tim	y	tg			
4/19/2022	12:33 PM	resident	45th Avenue	(219) 972-9713	Other: See Notes	sm	Resident said there is a sunken and broken sewer cover about to cave in at the entrance to First Merchant Bank. (westbound lane)Chekced this, it will need to be replaced, not going to cave in though.	WT/SW	Y	AK	4/19/22	1:50 PM	
4/20/2022	10:42 AM	Eric Grigson	2040 Azalea Drive	(219) 201-8595	Sidewalk/Curb Issue	sm	Resident would like information on the sidewalk replacement program. Also, he wants to know if he can put landscaping bricks in the parkway because the trees were removed. Please advise resident...Talked to resident.	Street	y	bkb			
4/20/2022	11:24 AM	nancy Michner	8834 Cottage Grove Avenue		Pot Hole	sm	Resident said there are several pot holes in the alleys between Lincoln and Ridge and she would like them fixed..ok	Street	y	bkb			
4/20/2022	11:30 AM	David Wenskus	2042 Martha Street	(815) 937-0592	Sidewalk/Curb Issue	sm	Resident would like information on the sidewalk replacement program and info on replacing his apron. Please advise resident...Talked to resident.	Street	y	bkb			
4/21/2022	8:00 AM	Eve Dykstra	3128 Laporte	(708) 261-7966	Pot Hole	sm	Resident would like to put a request in for gravel to be put in her alley. She said it is a big muddy mess ...Request has been accepted.	Street	y	bkb			
4/21/2022	11:00 AM	Patty - Building Dept	2241 41st street		Other: See Notes	sm	sewer Tap Inspection - Friday 4/22/22 - 11:30am - Please call Patty when you are done Trey will get it	WT/SW	Y	AK	4/22/22	8:08 AM	
4/21/2022	2:40 PM	Judy Ashley	3222 Wirth Road	(219) 413-8233	Dead Tree/Status?	sm	Resident said the tree behind her house by the cady ditch is dead. Please check and advise resident	Tim	y	tg	4/27/22		
4/22/2022	11:15 AM	Frank Martinez	9105 Indianapolis Blvd	(219) 923-9922	Sink Hole	sm	Frank said he thinks there is a potential sinkhole starting on the side of his office building and wants someone to come and check it out. Please call and advise Got it handled, not our issue.	WT/SW	Y	AK	4/22/22	1:14 PM	
4/22/2022	12:38 PM		North Dr and Spruce St		Pot Hole	kw	pot hole is getting large...Brendan wil check it out.	Street	y	bkb			
4/22/2022	1:07 PM	Elsie Cada	3414 41st Street	(219) 924-8932	Other: See Notes	sm	Resident said there is a 1 foot deep x 2 foot wide hole in the easement behind her. She said it is very dangerous and someone is going to get hurt. She wants someone to come out and fix it Sending a crew out to check and fill the hole and a crew to televise the sewer and make sure it isnt collapseing	WT/SW	Y	AK	4/22/22	1:23 PM	
4/22/2022	1:10 AM	Angela Grady	3527 42nd Street	(317) 431-7801	Other: See Notes	sm	Resident said there is a big hole around the base of the meter and there is caution tape around it in the far back left corner of her backyard. Resident wants someone to come out and look at it. AT&T	WT/SW	Y	AK	4/25/22	10:38 AM	
4/22/2022	3:30 PM	Rita Sole	9330 Waymond Ave	(708) 970-4867	Other: See Notes	sm	Resident said when she turns the water on it smells like sewage It was her shower drain	WT/SW	Y	AK	4/22/22	3:21 PM	
4/25/2022	9:17 AM	resident	8423 Parrish Avenue		Leaves Pickup	sm	resident has bagged leaves to be picked up..Picked up	Street	y	bkb			
4/25/2022	9:45 AM	Jesse Avina	8944 Erie		Other: See Notes	sm	resident said he has a sewage smell in his basement and wants us to come and check our side. Please check and advise resident Jimmy wil check the line and jet it to be sure.	WT/SW	Y	AK	4/25/22	10:37 AM	
4/25/2022	10:00 AM	Paul Wiltberger	8540 Orchard Drive	(219) 680-0083	Other: See Notes	sm	Resident said there is an oil spot on the street and is afraid that someone might get hurt (motorcycle). Resident wants the street sweeper to come by to clean the oil spot...Ok, we will try to get more of it up.	Street	y	bkb			
4/25/2022	10:34 AM	Katkleen Peralta	8424 Cottage Grove Avenue	(773) 469-9253	Dead Tree/Status?	sm	Resident thinks the tree in the parkway is dead. Please check and advise resident tree has some small dead wood but is not dead	Tim	y	tg			
4/25/2022	3:25 PM	Michelle Scheffel	9128 Cottage Grove Avenue	(219) 680-7853	Pot Hole	sm	Resident said there are several pot holes in front of her house that need to be fixed....Will get them as soon as we can, this street is scheduled to be paved this year.	Street	y	bkb			
4/26/2022	10:45 AM	resident	Parrish and Glenwood		Restorations	sm	Resident said the northeast corner of Parrish and Glenwood needs restoration. It is a big mud hole per resident...CCMG restoration crew of Reith Riley	Street	y	bkb			
4/26/2022	2:07 PM	Zarko Ivetic	10024 Wildwood Lane	(312) 656-9827	Dead Tree/Status?	sm	Resident said the tree in the parkway is dead. Please check and advise resident (219-513-6267)	Tim					
4/27/2022	7:45 AM	resident	Main Street		Pot Hole	sm	Resident said there is a big pot hole on the north side of Main Street just west of Indianapolis Blvd...Ok	Street	y	bkb			
4/27/2022	9:10 AM	Lorraine Kobus	10016 Wildwood Lane	(219) 922-4925	Dead Tree/Status?	sm	Resident said her tree in the parkway has a diseace and thinks it is dead. Please check and advise resident	Tim					
4/27/2022	9:20 AM	Jeanine Fleishman	3201 Maple Drive		Pot Hole	sm	Resident said there is a huge pot hole in front of their house, it is the corner of Maple Drive and Parrish...Gave to Pete	Street	y	bkb			
4/27/2022	10:50 AM	Mark Arredondo	3433 Franklin Street	(219) 545-4726	Dead Tree/Status?	sm	Resident said the tree is hollow inside and is dangerous. He had someone out to look at it because of ants and they were able to push a rod right through it. Please check and advise resident tree has ants in base so we will take it down	Tim	y	tg			
4/28/2022	9:15 AM	David Lord	3245 George Street	(708) 355-1655	Dead Tree/Status?	sm	Resident thinks the tree in the parkway is dead. Please check and advise resident tree is not dead	Tim	y	tg			
4/28/2022	11:25 AM	Estavan Martinez	3232 Farmer	(773) 620-7538	Pot Hole	sm	Resident said there are several pot holes on his street that need to be filled...ok	Street	y	bkb			
4/28/2022	2:25 PM	Tim	3026 45th Avenue	(219) 238-9324	Other: See Notes	sm	Resident said there is about a 6ft section of curb that needs to be painted. It is in front of Manta & Hurst Ins....Ok	Street	y	bkb			
4/28/2022	3:22 PM	Douglas Salus	3721 41st Lane	(219) 776-0084	Restorations	sm	AT&T was working in his backyard and left a big hole. Resident is worried his child or dog might fall in this hole. He said the town of highland is responsible for this because we let AT&T come into Highland to work.	Mark					
4/29/2022	1:55 PM	Christopher Mastey	9642 5th Place	(630) 878-9302	Pot Hole	sm	Resident said he has big pot holes in front of his house that need to be filled...Next time we are out cold patching we get them.	Street	y	bkb			
4/29/2022	2:40 PM	Ruth Westberg	2911 Strong Street	(219) 678-0571	Dead Tree/Status?	sm	Redident said her tree in the parkway has a big hole in it and she thinks it is dead and is afraid it might fall. Please check and advise resident this tree is already on list to be cut talked to resident again	Tim	y	tg			
4/29/2022	2:40 AM	Ruth Westberg	2911 Strong Street	(219) 678-0571	Sidewalk/Curb Issue	sm	Resident would like info on the sidewalk replacement program. She said her sidewalk is raised. ..Talked to resident	Street	y	bkb			
5/2/2022	8:48 AM	Linda Wilson	2534 Martha	(219) 765-3455	Snow Plow Damage	kw	Plows lifted new sod from last years water main project. Please fix	Street	y	bkb			
5/2/2022	8:53 AM	Carol Kulczyk	9121 Wildwood Dr	(219) 730-9280	Dead Tree/Status?	kw	Resident believes the parkway tree is dead/hollow in the middle. Please check and let her know Jeff is going to cut it down	Tim	y	tg			

5/2/2022	9:41 AM	Andrew Deyoung	3419 Martha St	(708) 250-2511	Other: See Notes	kw	Residents trampoline flew into Cady Marsh ditch a couple of weeks ago and he is asking if we can assist to get it out. They have tried a couple times and unable to get it out. We were able to pull it out.	Street	Y	AK	5/2/22	2:52 PM	
5/3/2022	9:25 AM	Alex Pera	2033 38th Street	(219) 923-2565	Leaves Pickup	sm	resudent has bagged leaves to be picked up and wants to know if you can come now to get them because the bags are going to fall apart..Gave to Dylan and Kyle	Street	y	bkb			
5/3/2022	9:26 AM	Melana Zavesky	9027 Cottage Grove Avenue	(219) 381-4653	Drainage Issues	sm	Resident said the storm drain in front of her house is clogged with leaves and it is flooding in front of her house Leaves cleared	WT/SW	Y	AK	5/3/22	10:48 AM	
5/3/2022	10:40 AM	resident	2433 Clough Avenue		Drainage Issues	sm	Resident said the storm drain is clogged up and it is flooding on their street Sending JImmy	WT/SW	Y	AK	5/3/22	10:50 AM	
5/3/2022	1:10 PM	Donald Przybyla	3822 Sandalwood	(219) 844-7555	Other: See Notes	sm	Resident said the tree just south of him at the vacant lot next door fell down and is about 2 feet away from his house. He wants someone to come and remove the tree. Please advise resident talked to resident it's a very small tree he is going to have his lawn company do it , it`s not our tree	Street	y	tg	5/3/22		
5/3/2022	2:00 PM	Gretchen Wasowski	3951 Juniper Trail	(618) 444-2453	Other: See Notes	sm	Resident said the yellow paint on the curb has faded and needs to be repainted. She has a fire hydrant in front of her house that cars are parking by because the paint has faded….If a car is parking in front of the hydrant then she should call HPD, we will get to it as soon we can.	Street	y	bkb			
5/4/2022	7:40 AM	Brian Flanagan	2120 Martha Street	(219) 746-3647	Sink Hole	sm	Resident said there is a large sink hole in his parkway. There was a tree that was removed from that spot. He would like someone to come out to see what is going on and fix it. Please check and advise resident There is no sewer in the parkway. Sidewalk is lifted from the old roots.	Tim	y	tg			
5/4/2022	8:35 AM	Mike Hawkins	3409 Grand Blvd	(219) 576-2512	Other: See Notes	kw	Resident has approx. 15 clear bags of branch clippings for pickup…After looking at this I have deemed it a loader stop for this Friday.	Street	y	bkb			
5/4/2022	11:25 AM	Sharon Scasny	10010 Wildwood Lane	(219) 765-3191	Dead Tree/Status?	sm	Resident said the tree in the parkway is dead. Please check and advise resident	Tim	y	tg			
5/4/2022	1:15 PM	Katlyn Crose	9247 Kennedy Avenue	(219) 743-3297	Mailbox damaged	sm	Resident said her mailbox was damaged from the snow plow in February. I asked if she called when it happened and she said no, they just put a screw in it but now it fell over. She wants it to be replaced. (I also put the call back to Brian so she could leave a message) Please advise resident...We will take a look at it and yet the resident know.	Street	y	bkb			
5/4/2022	2:00 PM	resident	Lincoln Pump Station		Other: See Notes	sm	Resident said whoever cut the grass at Lincoln Pump Station did not finish cutting and wants them to come back and finish….Ok	Street	y	bkb			
5/5/2022	10:15 AM	Paul Celestin	2932 Condit	(219) 796-4522	Dead Tree/Status?	sm	Resident said his tree in the parkway has a disease and is loosing branches Please check and advise resident told resident we would remove	Tim	y	tg			
5/5/2022	11:00 AM	Adara Simonelli	8106 Grace Street	(773) 986-6978	Pot Hole	sm	Resident said there is a pot hole in front of her driveway that needs to be filled.Noted.	Street	y	bkb			
5/5/2022	11:20 AM	Jim Alexanderson	9545 Farmer	(219) 239-6849	Pot Hole	sm	Resident said there is a pot hole in front of his house that needs to be filled…Noted	Street	y	bkb			
5/5/2022	12:45 PM	Leonard Camadeca	8109 Grace Street	(219) 972-0221	Other: See Notes	sm	Resident said he has a chemical taste in his water from all the faucets He wants someone to come out and check it Brett is chekcing on this	WT/SW	Y	AK	5/5/22	1:05 PM	
5/5/2022	1:02 PM	resident	2816 Franklin		Branches Missed	sm	Resident said the branches were missed Brendon will get them today	Street	Y	AK	5/6/22	8:58 AM	
5/6/2022	7:34 AM	Kathy Schultz	3544 41st Street	(219) 743-3364	Other: See Notes	sm	Resident said she has water backup in the floor drain in her basement. She wants someone to come and check our side. Please advise resident Jimmy looked into this, she has large trees over her storm line, our mains are clear.	WT/SW	y	AK	5/6/22	8:31 AM	
5/6/2022	8:45 AM	Frank Jones	9318 Liable Road	(219) 306-3541	Restorations	sm	The snow plow tore up his parkway, he said someone came out to do restoration and put seed down but it is 2 inches lower than his grass. He would like it fixed..Yes, this is snow plow damage but the seed was layed bt AT&T when they did their restoration, we will fix it the right way when we have a chance.	Street	y	bkb			
5/9/2022	10:30 AM	Larry Sharon	3825 Jewett	(630) 636-1379	Dead Tree/Status?	sm	Resident said the tree in the parkway has termites and is dead and wants it removed tree has rot so we will remove it also allowing roots into storm sewer	Tim	y	tg			
5/9/2022	10:30 AM	Nancy Carrothers	9334 Ellen Drive	(219) 808-7117	Valve Issues	sm	Resdident said we changed her water meter on 4/14/22 and now the valve is leaking. She wants someone to come out and check and fix. She will be home today 5/9/22 after 1:00pm or all day tomorrow 5/10/2022 Matt is going over there at 1:00	WT/SW	Y	AK	5/10/22	9:13 AM	
5/9/2022	11:25 AM	Trevor Hastings	9234 Prairie	(219) 838-6743	Pot Hole	sm	Resident said he has a big pot hole in front of his house that needs to be fixed…Jeff will get it.	Street	y	bkb			
5/9/2022	11:38 AM	Linda Sapyta	2941 Parkway Drive	(219) 838-6497	Leaves Pickup	kw	Resident has bagged leaves for pickup..Gave to Jeff….No bags were there.	Street	y	bkb			
5/9/2022	11:58 AM		Delaware St. / Laporte to Ridge		Pot Hole	kw	Lots of potholes..Gave to Sean & Pete	Street	y	bkb			
5/9/2022	1:50 PM	Linda Brackett	10046 4th Place	(219) 781-3555	Dead Tree/Status?	sm	Resident said both her trees in the parkway are loaded with ants and big branches keep falling off. She wants the trees removed. Please check and advise resident trees are in bad shape Dave will remove	Tim	y	tg			
5/9/2022	2:53 PM	Rolando Cruz	2907 Strong St	(219) 201-3555	Other: See Notes	kw	Tree fell in parkway last year. The tree was removed but there is still a hole with HPW cones around it….Stump needs to be ground down then we will black dirt & seed.	Street	y	bkb			
5/9/2022	3:03 PM		WB Ridge Rd Bridge over the tracks		Pot Hole	kw	Pot hole called in by the boss…Filled	Street	y	bkb			
5/10/2022	9:15 AM	Melissa Miranda	8546 5th Street	(219) 616-9225	Dead Tree/Status?	sm	Resident said the tree in the parkway is dead (tree towards Garfield & 5th) Please check and advise resident called	Tim	y	tg			
5/10/2022	11:45 AM	Joshua Hyatt	3814 Wirth Road	(219) 501-3113	Water Pressure	sm	Resident said he has very low water pressure in all his faucets, shower and washer. Would like someone to come out and check. Please advise resident The water was shutoff by Joe on 4/27 for non payment. Matthew verified bbox in off position. Called the resident and left a voicemail for them to call back. The will need to contact Townhall	WT/SW		kw			
5/10/2022	12:26 PM		9545 Farmer Dr		Pot Hole	kw	Resident has large pot hole at the approach to the driveway. She states that numerous cars have hit it causing flat tires…Jeff will get it.	Street	y	bkb			
5/10/2022	2:53 PM	Daniel Longacre	9946 Erie Place	(219) 670-8966	Water On/Off Req.	sm	Resident needs the water shut off at 11:00am Wednesday 5/11/22 because a plumber is coming out to do repairs Will give to Matt	WT/SW	Y	AK	5/11/22	6:15 AM	
5/11/2022	7:55 AM	John Procopia	2625 45th Street	(219) 741-2732	Other: See Notes	sm	Resident said both toilets are not flushing and backing up in his doctors office. Please check and advise resident Jimmy is checking our main	WT/SW	Y	AK	5/11/22	8:18 AM	
5/11/2022	8:44 AM	Jim Kessler	2737 Garfield	(219) 669-0757	Pot Hole	sm	Resident said there are several pot holes that need to be fixed in the street…Gave to Sean & Pete	Street	y	bkb			
5/12/2022	10:00 AM	Charles Zavesky		(219) 629-2114	Dead Tree/Status?	sm	Charles said the town cut down trees and left the stumps at 10212 /1022/ Prairie/Cypress and 10232 / 10250 Parkway / Prairie. He said the town needs to remove the stumps	Tim	y	tg			
5/12/2022	11:50 AM	Maria Michels	3019 101st Street	(219) 924-0894	Restorations	sm	Resident said restoration was done for a water main break in front yard but not finished in the parkway. She wants to know if you are going back to finish. Next week	WT/SW	Y	AK	5/12/22	1:22 PM	
5/12/2022	3:25 PM	Dave Long	2036 Martha	(219) 688-1973	Water On/Off Req.	sm	Resident needs water shut off at 8:30am Friday 5/13/22. He has a plumber coming out I will send Matt	WT/SW	Y	AK	5/13/22	6:19 AM	
5/13/2022	9:45 AM	Estavan Martinez	3232 Farmer	(773) 620-7538	Pot Hole	sm	Resident called on 4/28 (call log) about several pot holes on his street. He wants to know why it isn't done yet Sean is currently out wih hot patch and will get them post haste…We have done these before as well, this street is being paved this year, we cant fill every pot hole in town as fast as they show up, we have a lot of otther work that needs to be done as well not just pot hole patching.	Street	Y	bkb	5/13/22	10:16 AM	
5/16/2022	8:32 AM	Jessica Rozanski	2844 Norman St	(219) 923-6134	Sink Hole	kw	Resident said she has to fill a sink hole around the bbox every year but there is no standing water. She would like to be home when someone comes out to check it. She will be home all day tomorrow Settling around the b box, putting dirt around it today.	WT/SW	Y	AK	5/16/22	9:28 AM	
5/16/2022	9:20 AM	Tim Crockett	2622 Clough Avenue	(219) 771-8359	Sink Hole	sm	Resident said there is a sink hole in front of his house in the street about 5 ft from the curb Not a sewer issue, Dan is cold patching it now	WT/SW	Y	AK	5/16/22	1:16 PM	
5/16/2022	9:35 AM	resident	8812 Kennedy Ave		Leaves Pickup	sm	Resident has about 20 bags of leaves to be picked up…Dennis said he would get them.	Street	y	bkb			

5/16/2022	2:56 PM	Jean Stone	8022 Sycamore	(219) 972-0556	Other: See Notes	kw	Hole in the street next to curb line (center of parkway) there is a manhole a few feet away and not sure which way the storm line is running. Resident wants to know if it is her responsibility to fix it our ours. Please check and let her know. Dan checked this, not a sewer issue, he is going to put some dirt in there.Looks like it is their sanitary service or perhaps settling from when the work was done. I talked to the gentleman who lives there about it.	WT/SW	Y	AK	5/17/22	6:09 AM	
5/19/2022	7:35 AM	Linda Wilson	2534 Martha	(219) 765-3455	Restorations	sm	Resident said the snow plow dug up her sod in the parkway that she just put down in the fall. She wants to know when it will be fixed…as soon as we have a chance.	Street	y	bkb			
5/19/2022	9:18 AM	Helen Paskiewicz	9648 Liable	(219) 924-4709	Other: See Notes	sm	Resident said on the 45th side at Liable that the asphalt is coming up around the sewer cap and when cars drive by its ending up in her yard. She would like someone to come out and fix Paving issue?	WT/SW	Y	AK	5/19/22	9:45 AM	
5/19/2022	10:25 AM	Lisa Symns	3129 Lois Place	(219) 670-5312	Other: See Notes	sm	Resident said the town removed a tree in September 2021 and another one 2 weeks ago and did not remove the stumps. She wants to know when they will be removed. Please advise resident talked to resident	Tim	y	tg			
5/20/2022	11:24 AM	Mary O'Toole	8359 Indianapolis Blvd	(626) 244-5992	Water Meter	sm	Property owner called and said the water meter in the unit is damaged. I asked how and she said she had no idea that she did not see it. They are not signed up for service, there is no one working there, and she isn't answering her phone.	WT/SW	Y	AK	5/20/22	2:11 PM	
5/20/2022	1:50 PM	Lucy Sanchez	9242 Grace place	(219) 200-7112	Dead Tree/Status?	sm	Resident said her tree in the parkway is infested with carpenter ants and wants someone to come out and check it. Please check and advise resident we will remove its impeading the storm sewer	Tim	y	tg			
5/23/2022	1:29 PM	Gust Samis	9337 Parkway Dr	219-924-2178	Sidewalk/Curb Issue	kw	Resident has sidewalk lifting. Tried to explain the whole process and I don't believe he was getting it. He is trying to figure out why it is lifting and would like someone to check it and get back to him. Cell phone is 312-307-2813…Talked to Resident	Street	y	bkb			
5/24/2022	3:30 AM	resident	2715 North Drive		Other: See Notes	sm	resident said the grass in the easement behind his house is very long…We only mow on top of the River along the wall, one pass west from Kennedy and back east to Kennedy, The Little Cal River people do the rest, I believe she calls every year and this is explained to her. We did it last week and will get to our part as soon as we can.	Street	y	bkb			
5/25/2022	12:55 PM	resident	Grand Blvd		Pot Hole	sm	Resident said there are several pot holes on Grand Blvd between 5th and Parrish	Street	y	bkb			
5/25/2022	1:30 PM	resident	8931 Waymond		Branches Missed	sm	resident has branches he wants picked up, I told him his day was Tuesday but he said all he did before was call and someone came out…Thanks for calling and we will get them next week, if we cant get them this week.	Street	y	bkb			
5/25/2022	2:29 PM	Karen	2019 Briarwood Lane	(219) 924-9073	Dead Tree/Status?	kw	Resident believes tree is dead. Please check and advise ash tree we will take down	tim	y	tg			
5/26/2022	8:50 AM	Norma Reitz	8725 Parrish Ave	(219) 793-4398	Tree/Branch Issues	kw	Large branch from parkway tree fell from the storm last night and is blocking the sidewalk..Jeff will cut up and leave in parkway to be picked up next week.	Street	y	bkb			
5/26/2022	8:51 AM	Norma Reitz	8725 Parrish Ave	(219) 793-4398	Dead Tree/Status?	kw	Resident would like the tree checked, it is dropping lots of large branches. Please check and advise resident does not want the tree cut at this time told her to just keep an eye on it and notify us if anything changes	Tim	y	tg			
5/26/2022	9:00 AM	Jennifer Sabo	3445 Martha	(219) 512-5647	Other: See Notes	sm	Resident said there is a metal pole sticking out of the ground in the parkway. She said there used to be a cone there but someone took it and left the pole. She is afraid someonr will get hurt. Please check…Its not metal but rubber/plastic from the boring company that has been working in town,talked to resident and took a picture and sent it to Tim.	Street	y	bkb			
5/26/2022	9:24 AM	resident	9607 Blvd Drive		Other: See Notes	sm	Resident has a large tree branch that fell from the storm to be picked up..Will get on next weeks route.	Street	y	bkb			
5/26/2022	10:27 AM	Sharon Molodet	2104 Northwood Ln	(219) 924-8925	Dead Tree/Status?	kw	Across from this address are 2 trees that are possibly dead. Please check and let Sharon, HOA member know. This roots are affecing the sidewalk told sharon we would take down about 7 tree`s in the 2100 blk.	Tim	y	tg			
5/26/2022	10:35 AM	Sandra Laszlo	2712 39th Place	(219) 924-6242	Sidewalk/Curb Issue	sm	Resident said she had the sidewalk replaced and it is not level. You can see the bottom of the slab of concrete and there is a big pile of dirt. She wants someone to come out and fix it. Please advise resident…I will take a look at it, she is not the owner/landlord of this property but a renter....Nothing wrong with the sidewalk out front, but we will add black dirt and seed to finish the restoration.	Street	y	bkb			
5/26/2022	11:20 AM	Natalie	2825 Condit	(219) 702-7926	Other: See Notes	sm	Resident said a large branch fell from the storm and is covering the sidewalk. She said it is too heavy for her to move..Will give to Jeff after lunch	Street	y	bkb			
5/26/2022	2:15 PM	resident	3009 99th		Branches Missed	sm	resident said his branches were missed, asked if someone could come and pick up..Wil get then today.	Street	y	bkb			
5/26/2022	2:55 PM	building dept	2655 Garfield		Other: See Notes	sm	Sewer Repair Inpection - Tuesday May 31, 2022 - 2655 Garfield - 1:00pm - please call building dept when done Given to Kyle	WT/SW	Y	AK	5/31/22	6:05 AM	
5/27/2022	8:45 AM	resident	9820 Erie Street		Branches Missed	sm	resident said his branches were missed..Ok	Street	y	bkb			
5/27/2022	8:50 AM	Jennifer	3115 44th Street	(219) 384-4309	Water On/Off Req.	sm	Resident is having work done and needs the water off on Tuesday May 31st at 8:00am Will give to Kyle	WT/SW	Y	AK	5/31/22	6:05 AM	
5/27/2022	2:19 PM	Edith Romero	3309 41st Place	(219) 765-2969	Sink Hole	sm	Resident said she has a big sink hole in front of her house and would like it fixed. I will check this out later today 05/31/22	WT/SW					
5/31/2022	8:15 AM	RESIDENT	3327 Condit Street		Other: See Notes	sm	resident said a huge branch fell down and needs to be picked up	Street					
5/31/2022	8:30 AM	Brian	9104 Wildwood	(219) 313-7033	Sewer Backup	sm	Resident has sewer backup and wants us to come out and check sewer on our side. No backup in our line as of today, spoke with him	WT/SW	Y	AK	5/31/22	9:38 AM	
5/31/2022	8:45 AM	resident	3400 block of Garfield		Pot Hole	sm	Resident said there are several pot holes in the alley that need to be filled. Pete is checking this out today	Street	Y	AK	6/3/22	7:01 AM	
5/31/2022	8:55 AM	Donna Habel	10014 Erie Place	(219) 545-4033	Dead Tree/Status?	sm	Resident has a tree in the parkway that she believes is dead, it is loosing branches and she is afraid its going to fall down. She also has a tree in the easement in the back of her house that she also thinks is dead. Please check and advise resident. told resident we would take down front tree	Tim	y	tg			
5/31/2022	10:05 AM	Josh Adduci	3131 Wirth Road	(219) 678-6786	Other: See Notes	sm	Resident said he was cutting the grass and noticed water coming up in the backyard. (I called Aaron) It is his sump pump line.	WT/SW	Y	AK	5/31/22	1:01 PM	
5/31/2022	11:15 AM	Allen Kalemba	3448 43rd Street	(219) 545-3345	Other: See Notes	sm	Resident said he just moved in and the b-box in the backyard is sticking up about 8 inches above the ground. He is worried beccause he is afraid someone is going to trip over it and get hurt. He wants to know if it can be fixed so it is not sticking out of the ground Kyle lowered it	WT/SW	Y	AK	5/31/22	1:07 PM	
5/31/2022	11:54 AM	Adam Torres	8947 Pettit Dr	(219) 238-9833	Dead Tree/Status?	kw	Resident believes the parkway tree is dead. Please check	Tim	y				
6/1/2022	7:42 AM	Gust Samis	9337 Parkway Dr	(219) 924-2178	Sidewalk/Curb Issue	kw	Only 4 squares were marked and there should be 5 marked according to the sidewalk replacement estimate he received. He said the worst one wasn't' marked. He is going to pay for the concrete on the 10th of the month and wants to make sure the 5th square is included...All 5 squares have a pink dot on them for my reference, once it has been paid for then i will schedule and mark it to be removed with lines and arrows showing what needs to be removed by my crew.	Street	y	tg			
6/1/2022	11:03 AM	Popa Heating	2643 Highway Ave	(219) 838-7700	Pot Hole	kw	They called approx. last fall about a large pot hole in the alley behind them. Please call and let them know when this is scheduled to be taken care of. Pete is heading over there today	Street	Y	AK	6/3/22	7:01 AM	
6/1/2022	11:38 AM	Martin	3218 Farmer Dr	(773) 858-6179	Snow Plow Damage	kw	Plow damage to the sod was called in at beginning of year and still has not been restored. North end of house	Street					
6/1/2022	12:05 PM		3442 Franklin St.		Other: See Notes	kw	Has 3 yard bags for pickup Jeffery will get them later today	Street	Y	AK	6/2/22	7:59 AM	
6/1/2022	1:39 PM	Tina	3003-3009 97th Pl	(219) 238-9722	Dead Tree/Status?	kw	All the trees in the parkway look to be dead. Please check and let them know told resident tree`s are not bad enough for us to take down	tim	y	tg			
6/1/2022	2:23 PM		2093 Ramblewood Dr		Other: See Notes	kw	leaf bags and yard waste for pickup please Jeff will get them today	Street	Y	AK	6/2/22	7:59 AM	
6/1/2022	2:27 PM		2703 Wicker Ave		Other: See Notes		leaf bags for pickup Jeff will get them	Street	Y	AK	6/2/22	7:59 AM	
6/2/2022	12:45 PM	John Boomker	8420 Delaware Street	(219) 838-4871	Other: See Notes	sm	Resident said he ran over the bbox with his lawnmower and broke it. Needs to be fixed Matt is heading over to assess the situation and hopefully fix it.	WT/SW	Y	AK	6/2/22	1:52 PM	

6/2/2022	1:50 PM	resident	8924 Southmoor		Other: See Notes	sm	resident has large bushes to be picked up Gave to Tim	Street	Y	AK	6/3/22	7:01 AM	
6/2/2022	2:40 PM	resident	8725 Parrish Ave		Other: See Notes	sm	Resident has logs to be picked up Gave to TIm	Street	Y	AK	6/3/22	90-	
6/2/2022	1:45 PM	Betty Orban	9208 Grace Place	(219) 614-5272	Other: See Notes	sm	Resident said the curb is cracked in the middle of the parkway, also she said the street is cracking and needs to be repaved…This street is on the list to be repaved thru CCMG the curb issue can be given to Derek to see if any other cueb work can be added.	Street	y	bkb			
6/3/2022	12:45 PM	resident	9228 Kleinman		Other: See Notes	sm	Resident said the grass needs to cut on the 9200 block of Kleinman…This is Park Department Soccer Fields.	Street	y	bkb			
6/7/2022	10:00 AM	Ron Spillers	8146 Wicker Park Drive	(219) 742-7512	Pot Hole	sm	Resident said there are big pot holes in front of his house and other areas from semi's coming down his street…Added to the list and will get as soon as possible.	Street	y	bkb			
6/7/2022	10:05 AM	Sue Sowinski	8735 Liable Road	(219) 670-4195	Pot Hole	sm	Resident said there are several pot holes in front of her house that need to be fixed….Added to the list and will get as soon as possible.	Street	y	bkb			
6/7/2022	11:25 AM	Pat Bearss	3221 Lincoln Street	(219) 381-5023	Sidewalk/Curb Issue	sm	Resident would like information on the sidewalk replacement program. Please advise resident….Left message.	Street	y	bkb			
6/8/2022	9:15 AM	Arlene Dickerson	3219 Highway Avenue	(574) 528-1133	Pot Hole	sm	Resident said the alley behind her has a lot of big pot holes from her house to Cottage Grove Avenue. She asked if they can please be filled in..Will take a look and add to the list for alley work, they are doing some alleys today, probably wont make there today, will get when we have a chance next time.	Street	y	bkb			
6/8/2022	9:35 AM	Anthony Toncozo	9612 Farmer Drive	(708) 280-1799	Tree/Branch Issues	sm	Resident said the trees in the easement behind his house are leaning on his fence. He would like someone to come out and fix it. Please check and advise….Trees in esaement do not belong to the Town and we don't cut trees in the easements this is the homeowners resposibility. According to the Lake GIS Dollar General owns the property where the trees/bushes are located outside of the homeowners fence.	Street	y	bkb			
6/9/2022	7:55 AM	Joseph Kwasny	3132 97th Place	(219) 924-5379	Sidewalk/Curb Issue	sm	Resident said the yellow curb in front of his house has faded and needs to be repainted yellow. Also the curb across the street in front of the fire hydrant is faded and needs to be repainted also….Called resident and left message that Jeff would be in Lakeside to finish up next week.	Street	y	bkb			
6/9/2022	8:05 AM	Alice Szcomba	9933 Delaware Place	(219) 880-6093	Pot Hole	sm	Resident said there is a huge pot hole in front of their house that needs to be filled.Added to the list , we will get as soon as possible.	Street	y	bkb			
6/9/2022	10:24 AM	resident	2034 Birchwood		Branches Missed	sm	resident said her branches were missed…Fridays route.	Street	y	bkb			
6/9/2022	11:27 AM	Hank Huizenga	3034 Lakeside Drive	(219) 680-0976	Other: See Notes	sm	Resident would like information on the sidewalk replacement program.. ..Talked to resident.	Street	y	bkb			
6/9/2022	1:55 PM	resident	Ridge Road		Pot Hole	sm	Resident said there is a big pot hole on Ridge Road going east right before turning south on Indianapolis Blvd..Gave to Brendan and Kyle for today.	Street	y	bkb			
6/10/2022	2:45 PM	Carmen Maldanado	2906 100th Street	(219) 794-5046	Snow Plow Damage	sm	Resident said she has snow plow damage and just wanted to know when someone would be out to do the restoration. Please advise resident..Gave to Tim and Kyle.	Street	y	bkb			
6/13/2022	9:50 AM	Anita Pilewski	9837 Delaware	(219) 924-7048	Pot Hole	sm	Resident said there is a big pot hole in front of her driveway that needs to be fixed	Street	y	bkb			
13-Jun	10:20 AM	Michael Wayne	2440 Wicker	(219) 313-6647	Other: See Notes	sm	Resident said the catch basin in front of his driveway was caving in and wants someone to look at it. Please check and advise resident….Needs repairs made to it,locates called and added to the water/sewer dept. list of things that need repaired.	WT/SW	y	bkb			
6/13/2022	3:10 PM	Brittany Maurushes	8116 Wicker Park Drive	(219) 629-4507	Dead Tree/Status?	sm	Resident said xfinity needs to do some work on the lines and the tress behiind her house (easement) have branches that are in the way for them to do their work an she wants pw to come and take care of it resident has been advised we do not take care of tree`s in rear easements	Tim	y	kw			
6/14/2022	8:50 AM	resident	9044 Ohio Place		Tree/Branch Issues	sm	Resident said a big branch came down from the storm yesterday, It is on the corner of Ohio and Wirth…Small limb will get it tomorrow.	Street	y	bkb			
6/14/2022	9:30 AM	Dave Buono	8143 4th Place West	(219) 838-3026	Restorations	sm	Resident had a shut off valve replaced in his yard and it is sinking all around it and he wants us to come out and fix it..It will be added to the restoration list.	WT/SW	y	bkb			
6/14/2022	9:45 AM	resident	3721 Ridge Road		Branches Missed	sm	Resident said his branches were missed yesterday and wants to know if they can be picked up today..No branches at or near this address.	Street	y	bkb			
6/14/2022	2:00 PM	Paul Graegin	2700 block of Clough	(219) 315-8126	Pot Hole	sm	Resident said there are several big pot holes in the alley of the 2700 block of Clough…Ok	Street	y	bkb			
6/14/2022	3:25 PM	resident	8921 Kennedy Avenue		Branches Missed	sm	resident said his branches were missed today..Picked up.	Street	y	bkb			
6/15/2022	11:52 AM	Ron Ballard	9310 Ellen	(219) 924-5540	Tree/Branch Issues	sm	Resident said a big branch fell off the tree and needs to be picked up…Thursdays Route.	Street	y	bkb			
6/15/2022	1:50 PM	Lisa Knight	9330 Kennedy Avenue	(219) 924-4843	Restorations	sm	This is a church, they said the water dept came out and had to change the head on the water line in the driveway. They want to know when the restoration will be done. Please check and advise. Driveway on the north side of the parking lot where a bbox was repaired.We will try and get it hot patched next week.	WT/SW	y	bkb			
6/16/2022	2:45 PM	Tina Kowalski	3132 Laporte	(773) 294-9544	Other: See Notes	sm	Resident would like information on the sidewalk replacement program..Called resident and left message.	Street	y	bkb			
6/16/2022	3:15 PM	Maria Torres	8404 4th Street	(219) 230-6122	Other: See Notes	sm	Resident wants information on the sidewalk replacement program. Her sidewalk is sinking. Please advise resident..Called resident and left message.	Street	y	bkb			
6/16/2022	3:20 PM	Maria Torres	8404 4th Street	(219) 230-6122	Other: See Notes	sm	Resident said neighbors are parking at the alley entrance by her house which causes Nipsco, AT&T and other trucks to use her driveway to get in the alley. She said there use to be a sign and it got removed. She wants to know if we can paint the curb yellow and put up another sign up so no one can park there because it is ruining her driveway...This is an easment not an alley, so i dont know of any sign that was ever there,plus its a public street and we cant just paint any curb yellow,she can contact HPD next time someone parks in the street.	Street	y	bkb			
6/17/2022	8:50 AM	Debbie Mackowiak	3535 Condit St	219-789-6122	Sewer Backup	sm	Resident has sewer backup in her basement and wants someone to come out and check our lines. Please check and advise resident…Jimmy went to check it out. Residents problem	WT/SW	y	bkb			
6/17/2022	12:35 PM	resident	3510 Laverne		Branches Missed	sm	resident said her branches were missed on her Wednesday route..Will get them on Wednesday.	Street	y	bkb			
6/17/2022	1:26 PM	B & D Sewer	9934 Express Dr.	(219) 322-2300	Other: See Notes	kw	Needs inspection Monday morning sometime. They are doing the work Saturday Matt is heading over there	WT/SW	Y	AK	6/20/22	7:49 AM	
6/20/2022	1:10 PM	Lisa	9330 Kennedy Avenue		Branches Missed	sm	resident said branches were missed last week…I'm assumimg these are up by the house that sits off the parking lot of the church on Kennedy, we will get them this week.	Street	y	bkb			
6/20/2022	1:32 PM	Monika Romano	3105 Highway Ave	(219) 730-0817	Other: See Notes	sm	Resident said the bbox is sticking out of the ground around 6 inches and she is afraid someone will get hurt. Please check and advise resident Box has been lowered	WT/SW	Y	AK	6/20/22	1:41 PM	
6/20/2022	3:36 PM	resident	3504 Ross Place		Branches Missed	sm	Resident said branches were missed 2 weeks in a row at 3504 and 3509 Ross Place…Gave tio Brendan.	Street	y	bkb			
6/20/2022	3:50 PM	Janet Krusza	8025 Robertson	(708) 770-2617	Other: See Notes	sm	Resident said the Wicker Park Manor sign at the entrance from Indianapolis Blvd is faded and needs to be redone and also the weeds are very high and needs to be cut. Please advise resident..This sign/area is not maintained by the Town, but I will send a crew to weed wack and spray the weeds.	Street	y	bkb			
6/21/2022	7:45 AM	Linda Peters	8733 Cottage Grove Avenue	(219) 838-0658	Branches Missed	sm	Resident said her branches were missed Monday….No branches in sight	Street	y	bkb			
6/21/2022	8:49 AM		corner of highway and cottage grove		Branches Missed	kw	Branches out since last Wednesday and missed yesterday…If it was the twig that was out there, then I got it.	Street	y	bkb			
6/21/2022	9:15 AM	Sharon	2119/2125/2137 Briarwood Circle	(219) 924-8925	Dead Tree/Status?	sm	Resident said the ash tree's in the parkway at 2119/2125/2137 Briarwood Circle are dead. Please check and advise resident advised sharon we will go through the area when we have time and take down the ash tree`s	Tim	y	tg			
6/21/2022	3:35 PM	Konnie Kuiper	9005 Kleinman		Other: See Notes	sm	Konnie just wanted to let you know he has a large pile of branches to be picked up	Street	y	bkb			

6/22/2022	10:35 AM	resident	3252 North Drive		Sink Hole	sm	Resident said there is a sink hole in the street by the drain They are filling the holes and packing it in today. No problem found in basin or the pipe.	WT/SW	Y	AK	6/22/22	11:32 AM	
6/23/2022	3:35 PM	resident	2534 Martha		Other: See Notes	sm	resident said there is a lot of debris on the street, resident wants to know if we can clean it up…Sent lou	Street	y	bkb			
6/23/2022	2:10 PM	Tracy Gaskey	9538 Farmer	(219) 713-7653	Pot Hole	sm	Resident has several pot holes on her street and wants them fixed..Ok,this street is also on the paving list for this year.	Street	y	bkb			
6/28/2022	1:12 PM	resident	3843 Ridge Road		Branches Missed	sm	resident said his branches were missed yesterday..Dylan got these yesterday morning.	Street	y	bkb			
6/28/2022	1:30 PM	resident	2039 Ridgewood		Branches Missed	sm	resident said the branches were missed	Street					
6/28/2022	2:25 PM	resident	3529 Franklin		Branches Missed	sm	resident said branches were missed the last 2 Monday's…Will get them later today, Wednesday	Street	y	bkb			
6/28/2022	3:16 PM		2421 Walnut Dr		Other: See Notes	kw	resident has 5 yard waste bags out for pickup that republic wouldn't take…Gave to Jeff, if to heavy to pick up then they will go on the Loader Stop list	Street	y	bkb			
6/28/2022	3:47 PM		2940 Clough Ave		Branches Missed	kw	branches out for 3 weeks :)…Wednesdays route	Street	y	bkb			
6/29/2022	9:30 AM	Tina Kowalski	3132 Laporte Street	(773) 294-9544	Dead Tree/Status?	sm	Resident said that the garbage truck hits the tree branches in the alley every time he picks up garbage. Resident wants to know if we cut cut the branches. Please check and advise resident Sean will cut the branches	Tim	y	tg			
6/29/2022	10:45 AM	Scott Oostman	2731 39th Place	(219) 712-3655	Other: See Notes	sm	Resident said his alley needs to be regraded. Please check and advise resident…Wil add to list	Street	y	bkb			
6/30/2022	8:15 AM	Jenny Crague	2444 Clough Avenue	(219) 713-0788	Sidewalk/Curb Issue	sm	Resident would like information on the sidewalk replacement program	Street					
7/5/2022	8:45 AM	Linda Wilson	2534 Martha	(219) 765-3455	Other: See Notes	sm	Resident said there is a lot of debris at the end of her street from work that was done before, she would like it cleaned up. Also where restoration was done by her driveway from the snow plow is all weeds. Please check	Street					
7/6/2022	8:50 AM	Linda Carter	2047 44th Street	(219) 840-8400	Snow Plow Damage	sm	Resident has plow damage that was never fixed. Please check and advise I will put this on our list of restorations next round.	Street	Y	AK	7/6/22	1:07 PM	
7/6/2022	2:22 PM		8015 Gordon Pl		Pot Hole	kw	called in pot hole that someone put a piece of cardboard over..Gave to Tim/Dylan	Street	y	bkb			
7/6/2022	2:35 PM	Ashley McMahon	2021 Azalea Drive	(219) 670-8498	Mailbox damaged	sm	Resident said her mailbox was damaged from the snow plow. She said she called when it happened and someone told her to call back in the summer. I told her we don't do that, we take all her information then and it will be fixed in the spring. Then she said she gave us the info when she first called. I looked at the damaged mailbox list and she was not on it. Jeff went and checked this out. He said the post is OK and dosen't need repair.	Street	Y	AK	7/8/22	9:22 AM	
7/8/2022	9:45 AM	Kayrn Eaton	3025 Strong Street	(219) 680-6209	Pot Hole	sm	Resident said there are pot holes by her house and other spots on Strong also at 5th and Strong that need to be fixed….Gave to Tim/Dylan	Street	y	bkb			
7/8/2022	12:30 PM	resident	9613 1/2 Farmer		Other: See Notes	sm	Resident said the tree branches from the tree in the parkway are covering the speed limit sign and it is dangerous. Also, it blocks his view when he is trying to back out of the driveway…Gave to Dennis.	Street	y	bkb			
7/11/2022	7:50 AM	resident	2039 38th Place		Branches Missed	sm	Resident said his branches were missed on his Friday pickup and wants to have them picked up today..No branches there.	Street	y	bkb			
7/11/2022	10:08 AM	walk in	8505 Kennedy Ave		Other: See Notes	kw	Gentleman walked in showing a picture of a hole in the edge of the asphalt. This has been checked before by Aaron, it is not a sink hole and is on private property. Sent a text to code enforcement to contact the building owner to fill the hole…This looks like it was caused by the boring company while boring AT&T cable.	Street	y	kw			
7/11/2022	3:42 PM	James Kessler	8532 Henry	(219) 669-0757	Other: See Notes	kw	Resident had a water main break last week and is wondering when the contractor is coming out to clean up the mess. Please let resident know when he can expect the restoration. Before the end of summer.	WT/SW	Y	AK	7/12/22	1:56 PM	
7/12/2022	8:35 AM	resident	3533 Franklin		Branches Missed	sm	Resident said his branches were missed yesterday..Brendan will get them later today.	Street	y	bkb			
7/12/2022	8:40 AM	Kalpana Doshi	2044 Briarwood Lane	(219) 614-8698	Sidewalk/Curb Issue	sm	Resident said her sidewalk is uneven and wants to talk to a supervisor about what her options are..Talked to resident	Street	y	bkb			
7/12/2022	8:50 AM	Linda Potesta	9350 Idlewild	(219) 545-3899	Other: See Notes	sm	Resident said she has had a couple of water main breaks and where the street was repaired it has settled and now has several cracks. She wants someone to come and look how bad it is. I will check this in a bit and talk to her	WT/SW	Y	AK	7/12/22	1:58 PM	
7/12/2022	10:00 AM	Kenneth Burse	2639 Parkway Drive	(219) 902-1185	Other: See Notes	sm	Resident said his neighbor just had a driveway poured and they cut a foot into his and now his driveway has a slant. He is not happy and wants to talk to a supervisor….Talked to Resident.	Street	y	bkb			
7/12/2022	12:03 PM	Art Armstrong	3549 Highway Ave	(219) 670-1704	Locate Lines/B-box	kw	Needs bbox located to replace inside broken valve Trey located	WT/SW	Y	AK	7/12/22		
7/12/2022	3:30 PM	Karina Sanchez-Hill Fire	8301 Indianapolis Blvd	(847) 288-3229	Water On/Off Req.	sm	Resident needs the water shut off on Monday August 1st at 7:45 (or earlier if possible) for work being done I will schedule this with Kyle	WT/SW	Y	AK	7/13/22	6:56 AM	
7/12/2022	3:35 PM	Tom Wells	3123 Strong Street	(219) 512-2568	Tree/Branch Issues	sm	Resident said there is a big branch from the tree in the parkway hanging all the way across the street and he is afraid that it might fall if we have a bad storm Sean is checking this out.	Street	Y	AK	7/13/22	6:54 AM	
7/12/2022	3:52 PM	Angelica Thompson	9228 Kleinman	(219) 895-0779	Other: See Notes	sm	Resident wants someone to come out and cut the grass (by the ditch) that is across the street from her I gave it to the mowing crew. They will check if that is something we do and take care of it if it is.	Street	Y	AK	7/13/22	6:57 AM	
7/13/2022	8:30 AM	Paul - Remcon	9729 and 9800 Wildwood Ct	(219) 805-7765	Restorations	sm	resident said the restoration was never done when the corner sidewalks were replaced -This is last years CCMG, gave to Derek	Street	y	kw			
7/13/2022	9:30 AM	Larry Peters	3721 42nd Place	(219) 924-3854	Pot Hole	sm	Resident said there are several pot holes in front of his house that need to be fixed..We wil get them.	Street	y	bkb			
7/13/2022	2:20 PM	Mike Sons	2934 Strong Street	(219) 838-5592	Other: See Notes	sm	Resident would like information on the sidewalk replacement program….Left message.	Street	y	bkb			
7/13/2022	3:08 PM	resident	9400 Cline Avenue		Branches Missed	sm	resident said her branches and neighbors down to Stracks were also missed today..Brendan will check it out.	Street	y	bkb			
7/13/2022	1:55 PM	resident	2019 Northwood		Other: See Notes	sm	Resident said the street light on the other side of the street has a tree in the parkway that is blocking the light. She wants to know if we can trim the tree. Light pole # 104652…We will trim tree when we get a chance, this is also a Nipsco Pole.	Street	y	bkb			
7/14/2022	9:15 AM	Carol Nichols	9125 Wildwood Drive	(219) 613-5184	Other: See Notes	sm	Resident said she had a tree cut down about a month ago and wants to know when someone will be back to remove the stump, Please advise resident	Tim	y	tg			
7/14/2022	1:30 PM	Antonio Gonzales	9625 5th Place	(815) 600-6873	Dead Tree/Status?	sm	Resident believes both trees in the parkway are dead or has a disease. Both trees are hollow on the inside. Please check and advise resident. Tree's do not appear to be hollow, left message for resident to call back if anything changes	Tim	y	tg			
7/14/2022	3:27 PM	Janice	2940 Clough Ave	(219) 588-4424	Branches Missed	kw	Branches keep getting missed. Has branches out again..Gave to Brendan	Street	y	bkb			
7/14/2022	4:00 PM	Eric Wilson	3114 Wirth Road	(219) 923-2068	Sink Hole	sm	Resident called and said there is a sink hole in the parkway. He wants someone to come and look at it. He put a cone over it. This is not our sewer or water main. We filled the hole and will keep an eye on it.	WT/SW	Y	AK	7/15/22	10:03 AM	
7/15/2022	7:40 AM	Carol Elliot	3305 Farmer Dr	(219) 924-5750	Other: See Notes	kw	Mark set up an appointment with this lady for someone to go check an inside drain next Thursday between 8:30 and 9:30, please and thank you. Aaron, I will forward the email to you. Got it, Thank you Matt is taking care of her	WT/SW	Y	AK	7/15/22	10:05 AM	
7/15/2022	8:45 AM	Linda Wilson	2534 Martha Street		Other: See Notes	sm	Resident said just past her house where it dead ends,where we did restoration is all weeds and needs to be mowed..We will get to it when we have a chance.	Street	y	bkb			
7/18/2022	1:14 PM	Ray Angle	8805 Kleinman Rd	(312) 593-6910	Dead Tree/Status?	kw	Resident believes tree is dead. Please check and let resident know talked to residenttalked to resident	Tim	y	tg			
7/18/2022	3:26 PM		Martha 10ft west of Woodward		Sink Hole		Possible sink hole on the yellow center line of street. No sewer problem, cut road and filled with stone and patched	WT/SW	Y	AK	7/19/22	6:10 AM	
7/19/2022	9:10AM		Grand Blvd & Parrish		Other: See Notes	dmp	Glass in intersection of Grand and Parish . Lou is taking care of this	Street	Y	bkb	7/19/22	9:30 AM	
7/19/2022	10:36 AM		Ridge Rd/west side of overpass		Other: See Notes	kw	West/North side of ridge road at north end of overpass going towards Jimmy Johns, blown tire, sitting there for a few weeks…Jeff will look for it.	Street	y	bkb			
7/19/2022	3:28 PM		reference above		Other: See Notes	kw	same caller called back and said thanks for getting the tire but there is also a hammer near where the tire was that she feels we should get :)..Ok	Street	y	bkb			

7/20/2022	10:00 AM	Denise Beck/Fire Dept.	Fire Department		Other: See Notes	kw	Denise wanted to let us know that they are still waiting for barricades from the 4th parade to be picked up from the back of the fire station…We will get them on Thursday.	Street	y	bkb			
7/20/2022	10:43 AM	Patty - Building Dept	2540 Clough		Other: See Notes	kw	Sikma & Sons needs a sanitary sewer line inspection done tomorrow, July 21st, at 11:30 am. Please and thank you I will give this to Adam.	WT/SW	Y	AK	7/20/22	10:53 AM	
7/20/2022	1:40 PM	Sylvia	8217 Grace Pl	(219) 838-3476	Sidewalk/Curb Issue	kw	Resident would like info on the sidewalk replacement program. She said her sidewalk is raised by the driveway approach. She will be home all day on Friday…Then I will call her on Friday.	Street	y	bkb			
7/20/2022	2:21 PM	Susan Pare	2305 99th St	(815) 319-1630	Other: See Notes	kw	Resident has had a foul smell for over a year and wants someone to see if it is something with her sanitary lines. She has had plumbers, NIPSCO, electrician and is at a loss Matt sniffed around and found nothing to do with the water or sewer. Perhaps a dead animal in the wall?	WT/SW	Y	AK	7/21/22	12:46 PM	
7/21/2022	10:00 AM	Hipolito Jimenez	9550 Hook Street	(219) 924-6357	Other: See Notes	sm	resident said the weeds between his fence and the railroad tracks are very high and pushing on his fence. He wants to know if someone can come and clear it out..This is not the Towns Property.	Street	y	bkb			
7/22/2022	9:35 AM	Mike Lawbaugh	9316 Ellen Drive	(219) 985-4032	Dead Tree/Status?	sm	Resident said the tree in the parkway is dead. Please check and advise resident we will take down	Tim	y	tg			
7/25/2022	7:45 AM	Sue Keck	2209 Terrace Drive	(219) 702-2033	Other: See Notes	sm	Resident said a big branch came down from the storm and is in the parkway /street and needs to be picked up. Resident also was worried that the tree might not be safe…Sean took care of branch and we will remove later this week.	Street	y	bkb			
7/25/2022	1:35 PM	resident	Osborne and Clough		Sink Hole	sm	resident said there is a sink hole right by the sewer..Already on Aarons list	WT/SW	y	bkb			
7/25/2022	2:15 PM	Mary Ann Meschi	2714 Lincoln Street	(219) 838-0364	Other: See Notes	sm	Resident would like information on the sidewalk replacement program	Street					
7/25/2022	2:50 PM	Highland Body Shop	8529 1st Street		Other: See Notes	sm	Resident has branches to be picked up.Gave to Dylan	Street	y	bkb			
7/26/2022	11:30 AM	Brian Lockhart	2022 Bluebird Lane	(219) 741-7617	Sewer Backup	sm	Resident has sewer backup in his house. He wants someone to come out and check our side…Sent Jimmy/Joe,they said it's the residents problem.	WT/SW	y	bkb			
7/28/2022	8:15 AM	Amy Cap	8849 Parkway	(219) 512-5112	Sewer Backup	sm	Resident has sewer backup in her basement shower and drain. She also can't flush her toilet. A plumber came out and did not find anything. She wants someone to come out and check our side. Please advise resident…Sent the Jimmy/Joe Crew,Residents problem	WT/SW	y	bkb			
28-Jul	9:45 AM	Joe Murovic	9236 Erie Street	(219) 765-5401	Drainage Issues	sm	Resident said his parking lot is flooding and would like someone to come out and check. Please advise resident..Not our problem according to Jimmy/Joe	WT/SW	y	bkb			
7/28/2022	9:45 AM	Linda Carter	2047 44th Street		Restorations	sm	Resident wants to know when her restoration from the snow plow will be done…Adam and Grant took care of it.	Street	y	bkb			
7/29/2022	8:50 AM	Susan Evans	3028 97th Pl	(219) 924-5374	Branches Missed	kw	Resident had branches out from the storm, yesterday was her pick up and they are still out there…Brendan wil get them today.	Street	y	bkb			
7/29/2022	9:47 AM	Robert	3509 Highway Ave	(70) 892-0096	Water Meter	kw	Resident had a head only meter changed on the 27th. He noticed a drip at an elbow just past the meter afterwords. Kyle went to check and said it currently wasn't leaking but the meter fittings need to be changed. A plumber will be contacted to take care of this Contacted Gatlin and the resident. They are going to work out a time for Gatlin to repair this.	WT/SW	Y	AK	8/4/22	1:52 PM	
8/1/2022	1:00 PM	resident	2920 Garfield		Branches Missed	sm	resident has branches to be picked up, they didn't have them out there first thing this morning Dylan got them.	Street	Y	8/1/2022	1/0/00		
8/2/2022	3:00 PM	Colleen Grove	3509 Ross Pl	(630) 440-4805	Other: See Notes	sm	Resident needs information on the sidewalk replacement program. (she received a notice from code enforcement) Resident will be out of town the rest of this week, please contact her next week. Please also check the status of the tree that is lifting the sidewalk, she feels that it already is leaning and thinks cutting the roots at the lifted sidewalk will cause the tree to fall. kw	Street					
8/3/2022	1:45 PM	resident	3744 41st Lane		Other: See Notes	sm	Resident just had some big branches fall down. The branches are in the parkway to be picked up…Ok	Street	y	bkb			
8/3/2022	3:25 PM	resident	9218 Grace Place		Other: See Notes	sm	Resident has another big branch that fell down and is in the parkway…Ok.	Street	y	bkb			
8/4/2022	9:15 AM	resident	2824 Condit		Other: See Notes	sm	Resident had a big branch fall from the storm to be picked up, he cut it up and it's in the parkway..Ok	Street	y	bkb			
8/4/2022	1:30 PM	Connie Wachala	9241 Kennedy Avenue		Branches Missed	sm	Resident has branches that were missed..The day isnt over yet.	Street	y	bkb			
8/4/2022	2:12 PM	resident	9348 O'Day Drive		Other: See Notes	sm	resident has a big branch on the parkway that fell from the storm..Ok	Street	y	bkb			
8/5/2022	7:30 AM	Christina Guzman	Clough & Osborne	(219) 200-9458	Sink Hole	sm	Resident said there is a sink hole by the sewer that is getting bigger Repaired 8/8/22	WT/SW	Y	AK	8/5/22	12:14 PM	
8/8/2022	9:30 AM	Dan Yatsko	2834 Franklin	(219) 381-7782	Other: See Notes	sm	Resident said that the alley needs to be regraded in the 2800 block between Garfield and Franklin..Ok	Street	y	bkb			
8/8/2022	1:45 PM	Robert Radziwecki	3921 Highway Avenue	(219) 359-6426	Other: See Notes	sm	Resident is a new owner of this house and there is a stump in the parkway that needs to be removed. Previous owner told him that the town took that tree down and left the stump. He wants to know if we can remove the stump. Please advise resident	Tim	y	tg			
8/9/2022	3:50 PM	resident	8152 Kennedy Avenue		Branches Missed	sm	Resident has branches on the parkway that were missed…Gave to Brendan to get today.	Street	y	bkb			
8/10/2022	11:10 AM		Saric at 45th		Pot Hole	kw	Gus said there is a large pot hole that is damaging cars as soon as you turn onto Saric of of 45th. He said there is also another smaller one a little further down..Gave to Jeff and Dennis	Street	y	bkb			
8/10/2022	2:10 PM	Steve Click	3030 44th Street	(219) 742-9648	Dead Tree/Status?	sm	Resident has a tree that was planted in the fall but it is not making it. He wants to know if we can remove it and be replaced. Please advise resident	Tim					
8/10/2022	2:50 PM	Hyacinth Burton	9028 O'Day Drive	(219) 838-6689	Branches Missed	drs	Resident reports branches were not picked up. Had branches out for 2 days prior. Please pickup on Thurs 8/11…Brendan will get them today 8/11	Street	y	bkb			
8/10/2022	2:50 PM	Karen Kusta	2019 Briarwood Lane	(219) 924-9073	Other: See Notes	sm	Resident had a dead tree removed and wanted to know when the stump will be removed. Please advise resident	Tim	y	tg			
8/10/2022	3:10 PM	John Hoffman	3218 43rd Street	(219) 902-2775	Dead Tree/Status?	sm	Resident believes the tree in the parkway is dead. He is at the corner of Saric and 43rd Street. The tree is on the Saric side, there are three trees and it is in the middle. Please check and advise resident	Tim	y	tg			
8/11/2022	8:00 AM	resident	8817 Carolina		Branches Missed	sm	resident said his branches were missed..They gone	Street	y	bkb			
8/11/2022	9:15 AM	Kay Komyatte	8812 Liable Road	(219) 677-2830	Other: See Notes	sm	Resident said the street light on Ridge Road & Liable by Travel Hut was removed back in February because of an accident and she wants to know when it will be replaced. She said there has been accidents there since then…No idea,would have to go thru the insurance, if no insurance then we have to find money to replace.	Street	y	bkb			
8/11/2022	3:00 PM	Kaitlyn Smith	2914 Strong	(219) 316-2537	Sidewalk/Curb Issue	sm	Resident wants information on the sidewalk replacement program…Talked to resident	Street	y	bkb			
8/11/2022	3:05 PM	resident	3112 98th Place		Branches Missed	sm	resident said his branches were missed Brandon will take a look	Street	Y	AK	8/12/22	7:12 AM	
8/12/2022	9:20 AM	Joseph Marquez	9331 Waymond Avenue	(219) 801-0209	Other: See Notes	sm	Resident would like information on the sidewalk replacement program	Street					
8/12/2022	9:35 AM	resident	Ramblewood & Prairie		Tree/Branch Issues	sm	Resident saiid there are branches hanging over in the street causing cars to have to move over so they don't hit the branches going east on Ramblewood on the southside of the street..Jeff will get it.	Street	y	bkb			
8/12/2022	3:35 PM	Darlene Barron	8423 Gordon	(219) 201-4002	Pot Hole	sm	Resident said she has chunks of pavement and a big pot hole that needs to be fixed in the alley...I wil take a look at it.	Street	y	bkb			
8/15/2022	7:40 AM	resident	Alti Ct & Kleinman		Sign down/damaged	sm	Resident said the Alti Ct & Kleinman street sign is down..Gave to Jeff.	Street	y	bkb			
8/15/2022	10:00 AM	resident	Prairie & Timberidge		Sign down/damaged	sm	The entrance to Cardinal Campus on Priarie has a WARNING sign that is down….Will let Jeff know.	Street	y	bkb			
8/15/2022	11:32 AM		9406 Wildwood Dr		Branches Missed	kw	Branches were out last Thursday and missed pickup day was Friday..We will get them on Friday.	Street	y	bkb			
8/15/2022	2:00 PM	Mike Mofer	3324 Highway Avenue	(219) 713-6590	Other: See Notes	sm	Resident said the storm drain is sinking, also the sidewalk is sinking on one side in front of his house I will send Jimmy and Dan to check this out later today.	WT/SW	Y	AK	8/16/22	6:14 AM	
8/15/2022	2:25 PM	resident	9529 Manor Drive		Branches Missed	sm	Resident said she put branches behind her fence which is on Kleinman and they weren't not picked up last week. $th house from the corner by Blvd Estates..If they are there they will get picked this week.	Street	y	bkb			

8/16/2022	7:30 AM	Highland PD	Wirth and Grace		Sign down/damaged	sm	Highland PD caleed and said the street sign at Wirth and Grace was down..We will get it.	Street	y	bkb			
8/17/2022	12:43 PM	Hessville Plumbing	2925 Highway Avenue	(219) 845-8770	Other: See Notes	kw	Needs sewer inspection between 10 am and noon tomorrow Kyle took care of this	WT/SW	Y	AK	8/17/22	1:56 PM	
8/18/2022	7:42 AM		3317 Lincoln		Branches Missed	kw	Pick up day was yesterday, missed…2 cars are parked in front of this pile, that would be why they have not been picked up…I have pictures	Street	y	bkb			
8/19/2022	2:43 PM		3304 Strong		Other: See Notes	kw	has yard waste bags for pickup Jeff will get these today	Street	Y	AK	8/23/22	6:15 AM	
8/22/2022	9:25 AM	Margaret Joyce	9931 Branton Avenue	(219) 924-8040	Other: See Notes	sm	resident said there is a big rut in front of her driveway that she would like fixed, she said if you pull in her driveway you will notice exactly what she is talking about..I'll take a look at it.	Street	y	bkb			
8/22/2022	3:00 PM	resident	2934 Strong Street		Branches Missed	sm	resident put his branches out a little late today and they were missed, wants to know if they can be picked up I will give Dylan the address	Street	Y	AK	8/23/22	6:16 AM	
8/22/2022	12:18 PM		3316 Franklin St		Leaves Pickup	kw	Has bags of leaves for pickup after the branches are removed from the top	Street					
8/22/2022	3:40 PM	resident	8205 Grace Place		Branches Missed	sm	resident put the branches out late today and they were missed, wants to know if they can be picked up We will try and get to them when we can	Street	Y	AK	8/23/22	6:16 AM	
8/23/2022	10:30 AM	Katelyin	3345 Jewett Ave	(708) 738-0900	Dead Tree/Status?	kw	Resident believes parkway tree is dead. Please check	Tim	y	tg	8/24/23		
8/23/2022	10:40 AM	Linda Wilson	2534 Martha	(219) 765-3455	Other: See Notes	sm	Resident said at the end of her street needs to be mowed. It is overgrown Gave to mowing crew	Street	Y	AK	8/24/22	7:01 AM	
8/23/2022	3:40 PM	Kristen Baum	9220 Southmoor	(708) 574-2219	Pot Hole	sm	Resident said there is a big pot hole in her street around 9228 Southmoor and wants someone to come look at it Sending Brendan over there today	Street	Y	AK	8/24/22	7:00 AM	
8/23/2022	3:42 PM	Sandra Strickland	2019 Main Street	(219) 718-4175	Other: See Notes	sm	Resident said there are a lot of weeds in the rock by the ditch and wants someone to come and take care of it. She said we created this monster and we need to take care of it. They did this last week but will drive by again today and see if there is anything they can do.	Street	Y	AK	8/24/22	11:45 AM	
8/23/2022	3:45 PM	Helen Clark	2435 River Drive	(219) 838-5866	Other: See Notes	sm	Resident wants to talk to Mark about planting a tree in the parkway	Mark					
8/24/2022	7:37 AM	Shelby - PD	Lincoln Street		Sign down/damaged	sm	Street sign knocked down on Lincoln Street just east of Indianapolis Blvd Sent to Jeffery. There is no sign there	Street	Y	AK	8/24/22	8:10 AM	
8/24/2022	9:30 AM	Don Dykstra	entrance to Cardinal Campus		Sign down/damaged	sm	Resident said a warning sign was down at the entrance of Cardinal Campus and we picked it up but he said the new one was not put up Jeff is aware of this and will get to it when he can	Street	Y	AK	8/24/22	2:10 PM	
8/24/2022	9:40 AM	resident	3010 Laporte		Branches Missed	sm	resident said the branches were missed on Monday Dylan is checking it out	Street	Y	AK	8/24/22	11:46 AM	
8/24/2022	10:00 AM	resident	3315 W. 45th Street		Pot Hole	sm	resident said there are pot holes on 45th that need to be fixed…Entrance to a strip mall, this is not our property to maintain.	Street	y	bkb			
8/24/2022	11:15 AM	resident	Indianapolis & Main		Pot Hole	sm	resident said there is a big pot hole when you turn west off of Indianapolis to Main Street..Gave to Sean & Pete	Street	y	bkb			
8/25/2022	10:05 AM	resident	Grace & Laporte		Pot Hole	sm	Resident called and said there is a pot hole at Grace and Laporte, someone is going to get their tires popped..Gave to Sean & Pete	Street	y	bkb			
8/25/2022	10:20 AM	Helen Clark	2435 River Drive	(219) 838-5866	Other: See Notes	sm	Resident is wanting to know if she can plant tree's in her parkway. Please advise resident	Tim	y	tg			
8/26/2022	10:00 AM	John Corona	3316 41st St	(773) 559-6922	Other: See Notes	kw	Resident would like info on sidewalk/apron/and curb replacement He will be available by phone on Monday, please call..Talked to resident.	Street	y	bkb			
8/26/2022	12:25 PM	Roxanne	2943 Highway Avenue	(219) 923-1525	Other: See Notes	kw	Has branches in the alley and is telling me you guys pick them up there for them all the time :)..Branches gone	Street	y	bkb			
8/26/2022	1:07 PM	Mike Sons	2934 Strong Street	(219) 680-0503	Other: See Notes	sm	Rseident stopped in regarding the scheduling of his sidewalk replacement. He is wanting to know when,,Talked to resident.	Street	y	bkb			
8/29/2022	7:30 AM	Mike	3324 Highway Avenue		Pot Hole	sm	Resident said his alley has 2 huge ruts that need to be fixed..Ok, will try and see what we can do when we have a chance.	Street	y	bkb			
8/29/2022	11:10 AM	Connie Hansen	3935 Wirth Road	(219) 923-0477	Other: See Notes	sm	Resident called and said the weeds by the retention pond are very high and needs to be cut down…This is not our property..it belongs to Forrest Plaza Complex on Cline Ave, which is just north of Wirth Rd.	Street	y	bkb			
8/30/2022	9:30 AM	Miguel Campos	3024 100th Place	(219) 670-5276	Other: See Notes	sm	Resident said there was a water main break and we removed a couple of fence posts on March 2nd but did not put them back up. Resident wants to know when this will be done. Please advise resident Called and spoke with him, we will put new ones up when locates are finished.	WT/SW	Y	AK	8/31/22	9:17 AM	
8/30/2022	10:05 AM	Mary Haney	Ridge and Indianapolis	(219) 838-6814	Other: See Notes	sm	Resident said the illuminators on Ridge Rd am Indianapolis Blvd are hard to see at night and wants to know if we can do something to make them a brighter yellow…we will check it out.	Street	y	bkb			
8/30/2022	11:35 AM	Haley Williamson	2627 40th Place	(574) 261-8350	Water Pressure	sm	Rsesident has low water pressure in all her faucets. She said it started last week when there was a fire near her. Please check and advise resident. Bbox is broken and leaking - resident has been informed and crews will fix it today	WT/SW	y	kw			
8/30/2022	1:35 PM	Matt	8544 Kennedy Avenue	(219) 972-7777	Pot Hole	sm	Resident said there are a couple of pot holes in the alley behind him and wants them fixed..Gave to Sean	Street	y	bkb			
8/30/2022	3:30 PM	Bennett McCormick	8429 Liable	(219) 923-7183	Other: See Notes	sm	Resident called because he has clear water coming out from under his foundation and a puddle between his house and garage with a puddle by his deck. Kyle went and shut his water off and the leak is coming before the meter, Resident is going to call a plumber to come out repair	WT/SW					
8/31/2022	9:38 AM	Dawn Weiland	9433 Parkway Dr	(219) 201-5324	Restorations	kw	Resident said hydrant was replaced last week and restoration still needs to be done. Says that sidewalk was cracked during hydrant replacement. Please check and call resident. Checked and talked to her. It is on the concrete list	WT/SW	Y	AK	8/31/22	10:55 AM	
8/31/2022	3:30 AM	resident	3509 Ross Place		Branches Missed	sm	Resident said her branches were missed on Monday and wants to make sure they get picked up..Gave to Dylan	Street	y	bkb			
8/31/2022	3:35 AM	Mike	2823 Garfield	(219) 972-1026	Pot Hole	sm	Resident said he has some pot holes in the alley behind his house that need to be fixed..They will be back in that alley today to finish what they started on Tuesday.	Street	y	bkb			
9/1/2022	8:30 AM	resident	Ridge Road at Indianapolis Blvd		Other: See Notes	sm	The turning arrows and lines on the street going east on Ridge at Indianapolis are faded and needs to be repainted…Ok, State road.	Street	y	bkb			
9/2/2022	10:00 AM	David Sendejas	10050 5th Place	(219) 688-9484	Other: See Notes	sm	Resident said there is an acorn tree in the parkway and it is dropping acorns that are going in the sewer and clogging it up when it rains. Resident wants to know if the tree can be taken down. Please advise resident nothing wrong with tree resident has been advised we will NOT tsake it down	Tim	y	tg			
9/6/2022	10:45 AM	Christine Engstrom	2313 99th Street	(941) 286-0056	Dead Tree/Status?	sm	Resident said the tree in the parkway is dead and dropping branches. Please check and advise resident resident has been advised tree is not dead enough for us to remove	Tim	y	tg			
9/7/2022	9:45 AM	Michael Mcmahon	8424 Delaware Place		Branches Missed	sm	Resident said his branches at 8424 and 8434 were missed This pile is going to end up being a loader stop on Friday.	Street	Y	AK	9/7/22	1:18 PM	
9/7/2022	10:30 AM	Bob O'Donnell	9807 Prairie Avenue	(219) 877-5050	Other: See Notes	sm	Resident said we removed a sidewalk concrete square in front of his house to do a repair a couple of weeks ago and the gravel is sinking and there is a puddle. Resident thinks there is a leak. We turned the valve and stopped the leak, ground water is high in this area so I told him we would moniter it. Right now it is not leaking.	WT/SW	Y	AK	9/7/22	1:20 PM	
9/8/2022	9:34 AM		2044 Briarwood Lane	(219) 614-8698	Sidewalk/Curb Issue	kw	Resident would like information on sidewalk replacement. Please contact. ..Talked to resident.	Street	y	bkb			
9/8/2022	2:45 AM	Ida Gillis	9008 Arbor Hill Drive	(219) 743-5979	Other: See Notes	sm	Resident said her neighbor to the north of her has a trap that water is running out of into her yard from from the south of their house. She said it smells a little like sewage. She wants someone to come and look at it. We checked and spoke with her, we informed her neighbor that she will need a plumber to come out and check their line, it is backed up.	WT/SW	Y	AK	9/9/22	7:45 AM	
9/9/2022	12:37 PM	Marcus Brown	8420 Parrish Ct	(773) 440-9435	Other: See Notes	kw	Would like info on sidewalk replacement and also has a branch hanging over into the street	Street					
9/9/2022	12:40 PM	Robin Berry	9138 Cline Avenue	(219) 805-6464	Other: See Notes	sm	Resident said normally we cut back the weeds to the south of her house on Cline and wants to know if we can come out and take care of it..I've never had this done before and this is not our property according to the Lake GIS, we only cut along the sidewalk where it crosses the ditch and along the guard rail in the same location.	Street	y	bkb			

9/9/2022	1:02 PM	Paul Pearce	3440 Ross Place	(219) 484-9481	Dead Tree/Status?	sm	Resident believes the tree in the parkway is dead. Please check and advise resident has been advised we will remove the tree it is on top of a very shallow sanitary sewer	Tim	y	tg			
9/9/2022	1:05 AM	Robin Berry	9138 Cline Avenue	(219) 805-6464	Other: See Notes	sm	Resident said the hydrant by her house needs to be flushed out because the water tastes funny. Please check and advise We flushed the hydrant out front	WT/SW	Y	AK	9/9/22	1:48 PM	
9/12/2022	1:10 PM	Dominic Vasile	2405 River Drive	(219) 838-8440	Other: See Notes	sm	Resident would like information on the sidewalk replacement program. He was wanting to get it done while they are doing River Drive Project. Please advise resident Derek talked with Dominic. Told him that Town program does not cover private property work.	Street	Y	DRS	9/12/22	3:15 PM	
9/14/2022	12:10 PM	Nola Cameon	3433 Martha	(219) 924-8082	Snow Plow Damage	sm	Resident said she called back around April about snow plow damage and wants to know when it will be done. Please advise resident…This address was restored once before.	Street	y	bkb			
9/15/2022	9:30 AM	Louis Gard-kish	2904 Parkway	(219) 838-0375	Other: See Notes	sm	Resident said the B-Box is raised up in the sidewalk at 2828 & 2937 Parkway and people are tripping over it. She wants to know if it can be fixed. Please check and advise Kyle chekced these, they will be replaced soon.	WT/SW	Y	AK	9/15/22	11:07 AM	
9/15/2022	12:55 PM	resident	9203 Highland Street	(219) 924-2531	Branches Missed	sm	Resident said her branches were missed yesterday on her pick-up day..Gave to Brendan	Street	y	bkb			
9/16/2022	10:20 AM	Eugene Kuklinski	10212 Prairie	(219) 922-7803	Water Break	sm	Resident said water is coming up through the sidewalk. Please check Water is off, break inside wall, a plumber has been notified	WT/SW	y	kw			
9/16/2022	1:37 PM	resident	8680 Prairie		Other: See Notes	sm	resident has approx 13 bags of yard waste to be picked up..ok.	Street	y	bkb			
9/16/2022	3:20 PM	resident	8931 Waymond		Loader Stop	sm	resident was on the loader stop list and wasn't picked up today…I was given wrong address, we will get this week.	Street	y	bkb			
9/19/2022	9:45 AM	resident	2041 Bluebird Lane		Leaves Pickup	sm	resident has bagged leaves to be picked up..Gave to Jeff and Dennis.	Street	y	bkb			
9/19/2022	10:36 AM	Greg Hansen	8130 Grace St	(219) 433-6522	Water Break	kw	Neighbor called in, water gushing from the backyard. Aaron or Brian are checking it 6" main blew out. Repaired 9/19/22	WT/SW	Y	AK	9/20/22	7:17 AM	
9/19/2022	1:39 PM	Rebecca	3724 Alti Ct	(219) 682-7003	Other: See Notes	kw	Street sign was knocked down at some point and never put back up. Alti Ct and Kleinman..Sign has been on back order.	Street	y	bkb			
9/19/2022	1:55 PM	Paul	2220 45th Street	(219) 678-3618	Other: See Notes	sm	water is cloudy at Highland Gyros and they have been running cold water and it isn't getting any better - Kyle took the meter head off because the water was yellow and told Paul to run the water for a while.	WT/SW	Y	AK	9/20/22	7:16 AM	
9/20/2022	9:05 AM	Misty Garza	8145 Grace Street	(219) 614-0069	Sidewalk/Curb Issue	sm	Resident's sidewalk is raised up about 4 inches and wants to know about the sidewalk replacement program. Please advise resident	Street					
9/20/2022	10:05 AM	Judy Ashley	Wirth and Parrish	(219) 413-8233	Pot Hole	sm	Resident said a huge long hole is forming on Wirth west of Parrish and would like it fixed. Please check …Small hole along curb line, will get it next time we cold patch.	Street	Y	bkb	9/20/22	1:37 PM	
9/20/2022	12:50 PM	Jackie Ross	3039 Duluth	(219) 923-4749	Dead Tree/Status?	sm	Resident believes her tree in the parkway is dead. Please check and advise tree is not dead	Tim	y	tg			
9/20/2022	3:20 PM	Jim - Highland Body Shop	2605 Garfield		Branches Missed	sm	branches missed..Gave to Dylan	Street	y	bkb			
9/21/2022	9:25 AM	Stacey Ochoa	10104 4th Place	(219) 789-6045	Dead Tree/Status?	sm	Resident believes the tree in the parkway is dead, also had the othe dead tree in the parkway cut down and wants to know if the stump can be removed. Please check and advise the small tree is dead so jeff can cut it down	Tim	y	tg			
9/21/2022	12:42 PM	Andrea Brown	3516 Franklin	(219) 381-6418	Other: See Notes	kw	Resident says everytime it rains her garage floods, been happening for 10 years and she has never called. She is getting reading to do some electrical work in the garage and wants to see if anything can be done about the flooding. She feels the alley is built up to high by her home, she is in the middle of the block..Sean will try to grade alley.	Street	y	bkb			
9/22/2022	12:35 PM	Rudy - Hamptons	9456 Hampton Drive	(773) 415-2291	Water On/Off Req.	sm	Resident needs water shut off on Friday 9/23 at 9:00am. He has a plumber coming out to fix a leak. I gave info to Kyle	WT/SW					
9/22/2022	2:35 PM	Brad Johnson	3511 Garfield	(219) 798-3541	Other: See Notes	sm	Resident said in his alley the rock is about 3 inches higher than his garage and when it rains his garage floods. He would like the alley graded so it's not higher than the garage. Please check alley and advise resident..Same alley(surprise, surprise) as the one at 3516 Franklin, so its already been done.	Street	y	bkb			
9/23/2022	1:48 PM	Ida Gillis	9008 Arbor Hill Drive	(219) 588-4014	Other: See Notes	kw	Part of the CCMG project. Resident wants us to be aware that her sprinkler system was damaged during construction. Derek will call her	Street	y	bkb			
9/26/2022	10:06 AM		9812 Delaware Pl		Other: See Notes	kw	Carl Porter called saying there is standing water at this location. Not sure if it is a drain issue or water leak. Called Aaron This is a drain coming from the sump pump at the house. Carl is informing the resident they need to redirect it.	WT/SW	Y	AK	9/26/22	2:09 PM	
9/26/2022	11:54 AM		8002 Sycamore Ave		Leaves Pickup	kw	Leaf bags for pickup…No bags here.	Street	y	bkb			
9/26/2022	12:04 PM	Omar Torres	2120 44th St	(219) 805-1552	Other: See Notes	kw	Please locate bbox and make sure it works. Resident will call back later today or this week when he is able to schedule someone to fix his leaking inside valve to have the water turned off I shall give it to Trey today.	WT/SW	Y	AK	9/26/22	2:10 PM	
9/27/2022	8:15 AM	Omar Torres	2120 44th St	(219) 805-1552	Water On/Off Req.	sm	Resident would like his water shut off Wednesday 9/28/22 at 9:00am because he is having a leaky valve fixed Gave to Trey	WT/SW	Y	AK	9/27/22	10:14 AM	
9/27/2022	9:35 AM	resident	Lakeside entrance/Kennedy		Other: See Notes	sm	resident said there is a lot of debris from trees on the street at the entrance to Lakeside from Kennedy Avenue and wants to know if the street sweeper can come and clean it up..Will pass it on to Lou.	Street	y	bkb			
9/27/2022	10:50 AM	Mark Kelley	3137 Maple Drive	(219) 789-4241	Water On/Off Req.	sm	Resident needs the water shut off on Friday 9/30/2022 in the morning because he is having a plumber come out to repair a leak. Resident will call with time after confirmation with the plumber I will give this to Trey when we get a time. 9/30/22 9:30am Trey is going there now	WT/SW	y	AK	9/28/22	8:56 AM	
9/28/2022	1:55 PM	Alexander Neve	9504 O'Day	(219) 924-8871	Other: See Notes	sm	Resident said they have water coming in the basement but don't know where it is coming in at. Resident wants someone to come and check to see what the problem is. Basement seepage, not our issue. Trey advised the resident to call a plumber.	WT/SW	Y	AK	9/28/22	2:34 PM	
9/30/2022	10:00 AM	Shane Skinner	8201 Grace Place	(847) 344-1128	Other: See Notes	sm	Resident would like info on getting his apron replaced. Please advise resident..We are no longer doing estimates for the rest of this year.	Street	y	bkb			
9/30/2022	12:42 PM		Ridge and Cline		Other: See Notes	kw	Driver called stating the at EB Ridge Road going north on Cline, inside turn light is not turning green, it is staying red. INDOT has been called on this twice and is checking into the response..Midwestern has benn notified.	Street	y	bkb			
9/30/2022	1:25 PM	Luis Paz	3513 Strong Place	(708) 212-6866	Locate Lines/B-box	sm	Resident needs the bbox located asap because he is having a pool installed. Trey located th bbox	WT/SW	Y	AK	10/3/22	7:11 AM	
9/30/2022	1:30 PM	Gayle Wynn	9514 Saric	(219) 712-9405	Tree/Branch Issues	sm	Resident said there is a branch hanging from a tree in front of 9514 Saric. Gayle (who does not live there) is very concerned it is going to fall out of the tree and hurt someone and she wants someone to take the branch down. Please check..We will check it out.	Street	y	bkb			
10/3/2022	8:45 AM	Jack Rowe	2731 Norman	(219) 313-0661	Sign down/damaged	sm	Resident said the speed limit sign was knocked down and broke. Resident has the sign at his house I gave Jeff all the info	Street	y	bkb			
10/3/2022	8:50 AM	resident	Parkway Drive		Other: See Notes	sm	Resident said just west of Kennedy Ave on Parkway someone threw a mattress over the edge by the ditch by a No Dumping Sign. She wants to know if someone can come and pick it up..Gave to Jeff	Street	y	bkb			
10/3/2022	9:20 AM	resident	North Drive and Spruce		Pot Hole	sm	Resident said there are pot holes at the corner of North Drive and Spruce Street. Wants to know if they can be fixed ..Next time we are out cold patching we will get them.	Street	y	bkb			
10/3/2022	12:35 PM	Julie Shehigian	3118 98th Place East	(219) 845-0781	Sidewalk/Curb Issue	sm	Resident said the sidewalk in front of the house is raised and wants info on sidewalk replacement program…We have stopped doing estimates for this program for the remander of the year.	Street	y	bkb			
10/4/2022	10:15 AM	resident	3409 Grand Blvd		Other: See Notes	sm	resident has 4 bags of branches to be picked up..Gave to Dylan and Dennis.	Street	y	bkb			
10/4/2022	12:36 PM	Larry Daniel	3436 Lincoln St	(219) 923-4618	Other: See Notes	kw	10/3/22 (3) homes in the area 3444, 3428, 3429 had air in the water lines in their homes. Rainmaker was out that today winterizing 3436 Lincoln St. Contacted Rainmaker and they show these home does not have a backflow device. Pipta will be contacting the homeowner today.	WT/SW					
10/5/2022	8:45 AM	resident	2829 37th		Branches Missed	sm	resident said his branches were missed yesterday…Loader stop for Friday.	Street	y	bkb			
10/5/2022	9:25 AM	John Garcia			Sink Hole	kw	Caller believes there is a sinkhole in the roadway by the manhole on the NE corner of Martha and Grace We will look at this	WT/SW	Y	AK	10/5/22	9:43 AM	

10/5/2022	9:29 AM	John Garcia			Tree/Branch Issues	kw	Caller believes the trees on the north side of the bridge between the kennedy bridge and 2nd need to be trimmed. He believes they are blocking the clear view of the traffic signal when traveling westbound…We wil take a look at it.	Street	y	bkb			
10/5/2022	10:30 AM	Jillian Green	9527 Forrest	(219) 289-5643	Other: See Notes	SM	Resident said she ran over a nail at the corner of Forrest and Farmer on Friday where work is being done and again today and both times she had to have her tire replaced. She said there are nails in the street. She wants to be compensated for the damages. Emailed Milestone to direct Rex to clean nails from road and to maintain a cleaner worksite. Milestone is contacting Rex and will call resident to fix issue.	Derek	Y	DRS	10/5/22	12:40 PM	
10/6/2022	11:32 AM	Ken Kreuger	9238 Grace Pl	(708) 822-1956	Locate Lines/B-box	kw	This is resident's father. He was told the bbox was possibly under the shed. He has removed some of the flooring in the shed and has dug trenches and still is unable to locate the valve. He is asking if we can go back and assist in locating the bbox. The inside valve leaks whenever it is turned and they are waiting for the bbox to be located so the plumber can repair the inside valve We are going over there right now Bbox was located under the back corner of the shed. It has been raised and the homeowner was present.	WT/SW	Y	AK	10/6/22	11:43 AM	
10/10/2022	10:30 AM	Michele Bertalan	9219 Cottage Grove Place	(219) 742-3057	Sidewalk/Curb Issue	sm	Resident said her curb is all cracked up by the driveway and she would like someone to fix it. ..She would have to go thru the concrete replacement program or have her own contractor do the work that she wants done, we have ended the program for the remainder of the year.	Street	y	bkb			
10/10/2022	1:15 PM	Elizabeth Linn	2928 Parkway Drive	(219) 677-2002	Dead Tree/Status?	sm	Resident believes both her trees in the parkway are dead. Please check and advise resident tree's are Not dead	Tim	y	tg	10/12/22		
10/10/2022	1:55 PM	Barbara Leep	8339 Gordon	(219) 689-2809	Sidewalk/Curb Issue	sm	Resident has a sidewalk that goes from the street to her house. The part of the sidewalk that is in the parkway is raised up about 4 inches. Resident is in a wheelchair and she is having a hard time getting over that in her wheelchair. Please check and advise resident	Street					
10/10/2022	2:50 PM	Jackie Brady	9319 Ellen Drive	(219) 924-3077	Water Pressure	sm	Resident said her water pressure is low. She wanted to know if something was going on with the water in her area. He turned his own water off to leave town and turned it back on himself also. He said it was OK, per Sonny Knight. His water was mostly off.	WT/SW	Y	AK	10/11/22	1:24 PM	
10/12/2022	8:45 AM	Deloris Tegtman	3523 43rd Street	(219) 924-1350	Other: See Notes	sm	Resident said the storm drain in front of her house is clogged and flooding..Crew enroute.	WT/SW	y	bkb			
10/12/2022	12:23 PM	Pat Hayne	Liable and Franklin NE Corner	(219) 838-1316	Other: See Notes	kw	Area is overgrown and has not been maintained this year. Not sure who takes care of it but it makes it difficult to see to cross liable. After looking at GIS map, looks like Parks property, sent a text to Trever	Street	y	kw			
10/12/2022	12:55 PM	resident	Osborne St		Pot Hole	sm	Resident said there are a lot of pot holes on Osborne by Jiimy Johns. He wants to know if they can be patched. Please check..Sean got them	Street	y	bkb			
10/13/2022	1:35 PM	Kyle Anderson	9422 Farmer Drive	(219) 775-4019	Tree/Branch Issues	sm	Resident said the neighbor to the north of him has a tree in the parkway that is leaning over Farmer. He is afraid that the tree is going to fall. Big branches keep falling off. Please check and advise	Tim					
10/14/2022	1:25 PM	Amy Leyendecker	9238 Grace Place	(219) 670-9993	Water On/Off Req.	sm	Resident needs the water shut off on Friday 10/21/22 at 7:45am. She is having a plumber do some work Kyle got this one today	WT/SW	Y	AK	10/21/22	8:08 AM	
10/15/2022	9:35 AM	resident	9411 Ellen Drive		Other: See Notes	sm	resident has a big branch in the parkway to be picked up..Gave to Sean and Tim	Street	y	bkb			
10/15/2022	9:35 AM	resident	9437 5th Street		Other: See Notes	sm	resident has a big branch in the parkway and street to be picked up..Gave to Brendan	Street	y	bkb			
10/15/2022	9:50 AM	resident	9223 Grace Place		Other: See Notes	sm	resident has big branches in the parkway to be picked up..Picked up	Street	y	bkb			
10/15/2022	9:52 AM	resident	8826 Highland Street		Other: See Notes	sm	resident has big branches in the parkway to be picked up..Picked up	Street	y	bkb			
10/15/2022	12:35 PM	resident	3048 Lincoln Street		Other: See Notes	sm	resident has branches in the parkway to be picked up...Picked up	Street	y	bkb			
10/14/2022	1:50 PM	Barbara Leep	3535 Lincoln Pl	(219) 789-8506	Other: See Notes	kw	Residents mailbox post was broken off after street paving yesterday Derek was informed by the contractor when the event happened. They will either repair or replace the damage	Derek	y	kw			
10/17/2022	8:40 AM	James Salazar	10038 5th St	(773) 615-0811	Water Break	kw	Water has been building in the back of this property and 2 others since yesterday. No flowing noted. Kyle is going to check it Leak on the 4" main in the backyard. Fixed	WT/SW	Y	AK	10/18/22	7:19 AM	
10/17/2022	9:04 AM	Diane Hensley	3128 Eder	(219) 923-6799	Sewer Backup	kw	Has had water coming up basement floor drain since Saturday. According to social media a few other houses may also be affected No backup in our main, neighbors have no issues. Not our issue, resident was advised to contact a plumber.	WT/SW	Y	AK	10/18/22	7:20 AM	
10/17/2022	9:54 AM		2312 Ridge Rd		Other: See Notes	kw	Caller is advising that smelly water is coming through the retainage wall at this location Mark is going to check it. Mark checked and nothing is showing. We will keep an eye on it	WT/SW					
10/17/2022	12:52 PM	Mary Bates	9527 Erie St	(219) 730-4101	Tree/Branch Issues	kw	There is propery adjacent to this address that belongs to the TOH. There is a cracked tree that is going to fall and there has been damage to there fence previously. Please check and let resident know	tim	y	tg			
10/18/2022	7:40 AM	resident	Sandalwood		Other: See Notes	sm	resident said there is a big bush in the street on Sandalwood off of Kleinman..We will check it out.	Street	y	bkb			
10/18/2022	3:50 PM	Wayne Micka	2635 Hart Street	(219) 313-6910	Water On/Off Req.	sm	Resident needs the water shut off Wednesday 10/19/22 at 1:00pm because he is having work done. Kyle turned this off, they will call when the work is done and it needs to be turned back on.	WT/SW	Y	AK	10/19/22	9:02 AM	
10/19/2022	8:30 AM	Miriam DeWindt	9911 Kennedy Avenue	(219) 384-6770	Sidewalk/Curb Issue	sm	Resident called in on 3/23/22 about her curb. It is getting worse, it is about a 2 ft chunk out of the curb. She wants to know if it can be fixed	Street					
10/19/2022	2:45 PM	Bibles for Mission	2821 Highway Avenue		Other: See Notes	sm	There is a black garbage can in front of the store by the door. They would like it moved by the bike rack because when they open the door flys go in the store. I will talk to Jeff about moving this.	Street	Y	AK	10/20/22	7:07 AM	
10/20/2022	7:50 AM	Jessica Johnson	2939 42nd Street	(773) 849-5335	Water Pressure	sm	Resident said she is having no water pressure in all her faucets and wants to know if something is going on. Please check and advise resident. Thank you Matt is heading over there at 10.	WT/SW	Y	AK	10/20/22	10:12 AM	
10/20/2022	10:35 AM	Marcia Lockney	9535 5th Street	(219) 924-5214	Sidewalk/Curb Issue	sm	Resident called because a little girl fell and hurt herself yesterday because the sidewalk is raised a lot from the tree in the parkway. She wants someone to come and look at it. It is in front of her neighbors house to the south of her. She is afraid someone is going to get hurt really bad. Please check and advise resident	Street					
10/20/2022	10:13 AM	Mary Meyer	9830 Parkway Dr.	(708) 510-0153	Other: See Notes	kw	Resident had a plumber out this morning for a humming noise by the hot water heater. The plumber thinks it might be a check valve by the meter which is in the unit directly below her (9826). Attempting to make contact with 9826 to gain access to check the noise by the meters Kyle is going there today at 1pm This is the check valve by the meter. The management company has been notified	WT/SW	Y	AK	10/20/22	1:24 PM	
10/20/2022	11:10 AM	Iris Mendoza	10045 4th Pl	(219) 801-6126	Restorations	kw	Resident has not heard from anyone about the water break in her backyard. Trees were removed and she wants to know what and when will be replaced. Please call her I spoke with her, we will be restoring this as soon as it is settled. I will sidcuss the tree issue with her again when we do.	WT/SW	Y	AK	10/20/22	11:42 AM	
10/20/2022	3:10 PM	Roger Rodda	9450 Forrest Drive	(219) 924-6355	Other: See Notes	sm	Resident said his planter box was disassembled by the workers at the corner of Forrest and 43rd and would like it put back together Called resident and informed them the contractor will have the planter box back in place by the end of next week 11/2/22	Derek	y	kw	11/2/22	12:06 PM	
10/21/2022	8:15 AM	Dane Edmonds	School Town of Highland	(847) 826-5717	Other: See Notes	sm	Dane said he needed to change the date for borrowing the air compressor to November 1st. Please call to confirm	Tim					
10/21/2022	9:25 AM	Denise Baranowski	3418 42nd Place	(219) 924-7809	Sewer Backup	sm	Resident said she has sewer backup in the basement laundry room drain and wants someone to come and check Jimmy checked our lines, not our issue, advised resident on what steps she needs to take.	WT/SW	Y	AK	10/21/22	10:19 AM	
10/24/2022	7:35 AM	Peter Corich	3019 98th Street W	(219) 924-9603	Water Break	sm	Resident said there is a water main break in his backyard. He has water coming up in the backyard Found and Repaired.	WT/SW	Y	AK	10/24/22	1:05 PM	
10/24/2022	8:40 AM	resident	2101 Birchwood		Leaves Pickup	sm	resident said her leaves were missed on Thursday pickup Sent to Kevin	Street	Y	AK	10/24/22	1:36 PM	
10/24/2022	8:55 AM	resident	Kennedy & Lincoln		Other: See Notes	sm	resident said there is a big branch that is split on Kennedy & Lincoln (by Farm Bureau Insurance), he is afraid it is going to fall on a car. Sean and Dylan got it.	Street	Y	AK	10/24/22	1:23 PM	

10/24/2022	10:50 AM	Mike Hall	8525 Henry Street	(219) 201-9273	Pot Hole	sm	Resident said the alley behind her house has several pot holes especially by her garage entrance that need to be fixed Sean said we have filled these several times, he will go look at it again.	Street	Y	AK	10/24/22	1:24 PM	
10/24/2022	11:00 AM	Jennifer	10208 Idlewild Lane	(219) 895-0579	Other: See Notes	sm	Resident said the fire hydrant has been leaking since Friday. Hydrant needs repair, it will be done ASAP. Bagged as out of service for now.	WT/SW	Y	AK	10/24/22	12:31 PM	
10/24/2022	1:25 PM	resident	881 Prairie		Other: See Notes	sm	resident has bundles of yard waste to be picked up Gave to Dennis.	Street	Y	AK	10/24/22	1:37 PM	
10/25/2022	2:00 PM	Mary	10375 Oakwood Ct	(219) 689-6947	Pot Hole	sm	Resident said there are pot holes in the street, please fix..Next time we are cold patching we will get them.	Street	y	bkb			
10/25/2022	2:10 PM	Susan Murovic	9236 Erie Street	(219) 922-1643	Other: See Notes	sm	Resident said it is flooding in the front and needs a clean out jetted	WT/SW	Y	AK	10/26/22	7:13 AM	
10/25/2022	2:45 PM		3052 Lakeside Drive		Other: See Notes	kw	Street is flooded in front of the house. Check the main please jetted	WT/SW	Y	AK	10/26/22	7:14 AM	
10/25/2022	3:25 PM	Cindy	3527 41st street	(219) 680-8874	Other: See Notes	sm	Resident said it is flooding in front of her house, please check jetted	WT/SW	Y	AK	10/26/22	12:00 AM	
10/26/2022	9:10 AM	resident	3335 Grand Blvd		Other: See Notes	sm	Resident said storm drain is not draining. He cleaned the top and still not draining Jetted	WT/SW	Y	AK	10/26/22	9:29 AM	
10/27/2022	7:45 AM	resident	3118 Ridge Road	(219) 616-0554	Street Light Out	sm	Street light is out by residents house The # on the pole is T26..We will be doing street light checks on November 4th.	Street	y	bkb			
10/27/2022	10:05 AM	Vern Felton	2900 43rd Street	(219) 208-9235	Other: See Notes	sm	Resident would like someone to come and fix the sewer cover in the street, every time a car hits the cover it makes a loud noise Manhole isnt moving, we already put tar under the lid.	WT/SW	Y	AK	10/27/22	10:48 AM	
10/28/2022	9:20 AM	Paul Kincaid - Rencon	9800 Wildwood - 2306 Martha St	(219) 805-7765	Other: See Notes	sm	Water meter Sprinkler removals - 9800 Wildwood Ct & 2306 Martha Street Kyle and Trey are pulling these today.	WT/SW	Y	AK	10/28/22	9:45 AM	
10/28/2022	11:10 AM	Nidal Hasan	9013 Indianpolis Blvd	(773) 802-0928	Other: See Notes	kw	Sprinkler was leaking a couple weeks ago and owner said he was having it fixed. Kyle called it in today that the sprinkler was leaking again. Unable to get a hold of owner, voicemail box is full. Kyle is shutting the water off at the bbox until contact can be made with the owner. Kyle is also leaving a tag explaining why the water is off	WT/SW	y	kw			
10/31/2022	8:30 AM	Jon Hill	2819 Strong Street	(708) 752-6507	Other: See Notes	sm	Resident has water backup in his basement. Resident had plumbing work done ($3000.00) and it is still coming up in the basement. Resident said the plumber told him it has to be the main. Please check Our main is clear, televised and checked his service. I talked to him and advised him to call his plumber and have them check their work.	WT/SW	Y	AK	10/31/22	10:16 AM	
10/31/2022	12:14 PM		3534 Wicker Ave		Leaves Pickup	kw	Has 2 bags of leaves out for pickup. Today was her zone but the bags were left..This part of zone 6 is serviced by a leaf vac being pulled by a 4 wheeler so Jeff and Dennis will grab them.	Street	y	bkb			
11/1/2022	1:15 PM	Liz Griffin	8809 Liable	(708) 925-7353	Other: See Notes	sm	Resident said there is a street light that was hit by a car and has never been replaced on the corner of Ridge and Liable She is wanting to know when it will be replaced…When poles become available.	Street	y	bkb			
11/1/2022	1:50 PM	resident	2636 43rd Street		Leaves Pickup	sm	Resident has bagged leaves to be picked up…Ok, Fridays route.	Street	y	bkb			
11/1/2022	3:00 PM	resident	3301 Glenwood		Leaves Pickup	sm	resident has bagged leaves to be picked up….Ok, Next Tuesday's Route.	Street	y	bkb			
11/3/2022	4:17 PM		2908 38th St		Other: See Notes	kw	Residents bbox is sticking to far up out of the ground, he would like it lowered. Front yard by private sidewalk going to home. He also said the lid is cracked. Kyle fixed the box.	WT/SW	Y	AK	11/15/22	9:04 AM	
11/4/2022	9:30 AM	Elegance Wedding	2820 Highway		Leaves Pickup	sm	Resident said a big leave pile was left after the guys put them in piles..that would have been Deans Landscaping	Street	y	bkb			
11/4/2022	10:00 AM	resident	2019 Northwood Lane		Leaves Pickup	sm	Resident said her leaves were missed yesterday	Street					
11/4/2022	10:05 AM	resident	2430 Ridge Road		Leaves Pickup	sm	FYI - Resident called to say she has a huge pile of leaves to be picked up. I did tell her that Zone 1 was on Monday. She is afraid the leaves will blow in the street and cause an accident. (she knew she was zone 1)…No she is Zone #5, and they call every year with the same excuse becasuse she has a service do her leaves and they are always a week before her scheduled pick up day.	Street	y	bkb			
11/4/2022	1:15 PM	resident	3031 97th Place		Leaves Pickup	sm	resident said his leaves were missed	Street					
11/7/2022	10:20 AM	resident	44th & Manor		Sign down/damaged	sm	Resident said the street sign is leaning over like it has been hit…Jeff will take a look at it.	Street	y	bkb			
11/7/2022	12:50 PM	David Eden	3235 George Street	(219) 614-7427	Dead Tree/Status?	sm	Resident said both trees in the parkway are dead. The trees are dropping large branches and one actually hit the side of their car. Resident is afraid someone will get hurt or it will cause more damage. Please check and advise resident	Tim	y	tgt			
11/7/2022	2:05 PM	resident	2940 Clough Ave		Tree/Branch Issues	sm	Resident said a branch fell and it is covering some of the sidewalk…Gave to Jeff to check	Street	y	bkb			
11/7/2022	3:00 PM	Nazarene Church	9330 Kennedy Avenue		Water On/Off Req.	sm	resident needs the water turned back on. Tuesday 11/8/22 at 1:00pm..Gave to Kyle	WT/SW	y	bkb			
11/8/2022	8:40 AM	Javier Miranda	8546 5th Street	(219) 381-5793	Leaves Pickup	kw	Resident says he is zone 1 and his leaves were missed yesterday…Zone #3	Street	y	bkb			
11/8/2022	8:30 AM	Joyce Mctoy	8837 Branton	(708) 374-1137	Dead Tree/Status?	sm	Resident said both trees in the parkway are dead. One of the trees is leaning. Please check and advise resident	Tim	y	tg			
11/8/2022	11:32 AM	Jerry Lawhorn	10010 Express Dr	(219) 924-1644	Pot Hole	kw	Lots of pot holes in front of the driveway. Please check…Added to our list.	Street	y	bkb			
11/9/2022	9:30 AM	Popovich	9113 Idlewild	(219) 677-7627	Water Pressure	kw	Resident has air in all faucets and dirty water. Took a shower this morning, everything was fine. Went for breakfast and came back to the issue. Kyle is going to go check	WT/SW					
11/9/2022	2:00 AM	Raquel Dejesus	3018 97th Place	(219) 588-0314	Other: See Notes	sm	Resident said we put up temporary fencing in their yard from a water break. The fence keeps falling down and they have dogs. Resident wants someone to come out and fix it because she is worried her dogs are going to get out…Sent Adam	WT/SW	y	bkb			
11/9/2022	2:30 PM	American Legion Post 180	corner of 2nd and Ridge Road		Leaves Pickup	sm	American Legion Post 180 has leaves to be picked up…Passed on to the leaf crews, will get them hopefully today or tomorrow morning.	Street	y	bkb			
11/9/2022	3:45 PM	Woodys Garage	2941 Highway Avenue		Leaves Pickup	sm	Resident said her leaves were missed today..Will get them tomorrow morning.	Street	y	bkb			
11/10/2022	7:45 AM	resident	2234 Oakdale		Leaves Pickup	sm	Resident has 10 bags of leaves to be picked up..No Bags here	Street	y	bkb			
11/10/2022	3:55 PM	Pam Gallagher	3222 Duluth	(708) 925-1788	Dead Tree/Status?	sm	Resident said her tree in the parkway is dead. Please check and advise resident	Tim	y	tg			
11/14/2022	2:35 AM	resident	ramblewood by Office Depot		Pot Hole	sm	Resident said there are big pot holes turning south off of Ramblewood by Ofiice Depot….Added to our list.	Street	y	bkb			
11/14/2022	2:55 PM		2735 Eder		Other: See Notes	kw	In the alley behind this garage someone dumped 2 tires, please pick them up…Sean will get them.	Street	y	bkb			
11/15/2022	8:25 AM	resident	10117 4th Street		Other: See Notes	sm	resident has 6 bags of yard waste to be picked up…Thursdays route	Street	y	bkb			
11/15/2022	9:25 AM	Colleen McGuire	3249 George Street	(708) 337-2080	Other: See Notes	sm	resident has 6 bags of yard waste to be picked up….Wednesdays route.	Street	y	bkb			
11/16/2022	2:20 PM	resident	Martha just west of Wildwood		Sign down/damaged	sm	Resident said the crime watch sign is hanging down near the Highland / Munster border west of Wildwood. Resident asked if a new sign could be put up because this one is faded and you can't really see it….Jeff got it	Street	y	bkb			
11/21/2022	8:46 AM	Terry	3506 43rd Pl	(708) 224-8858	Water On/Off Req.	kw	broken water pipe inside home, Kyle is heading over to shut off at the bbox Kyle pulled the meter this house is vacant it was in a fire. Shut off is right next to pool	WT/SW	y	kw			
11/21/2022	11:40 AM	Robert Hastings	9234 Prairie Ave	838-6743	Pot Hole	kw	Has small pot holes in front of his house, also has some branches that I will add to the list…Ok.	Street	y	bkb			
11/22/2022	8:15 AM	Raquel Dejesus	3018 97th Place	(219) 588-0314	Restorations	sm	Resident is wanting to know when someone is coming out to fix her fence that was taken down from a water main break I will call her and try and set this up today. Weather permitting.	WT/SW	Y	AK	11/28/22	7:12 AM	
11/22/2022	9:20 AM	Bruce Bush	9153 Wildwood	(219) 680-0461	Other: See Notes	sm	Resident said the fire hydrant by his house is leaking and it has been leaking for several days. Please check…Kyle will, we plan on replacing it tomorrow.	WT/SW	y	bkb			
11/23/2022	9:00 AM	resident	3441 Ross Place		Leaves Pickup	sm	Resident saiid her leaves were missed and wants the leave vac to come back and pick them up….This is Zone #2 which was On Monday/Tuesday so they werent missed.	Street	y	bkb			
11/23/2022	9:10 AM	resident	Grand Blvd		Leaves Pickup	sm	Resident said the leaves were missed on the 3200 and 3300 block of Grand Blvd…Zone #2 route which was on Monday/Tuersday,so they were not missed.	Street	y	bkb			
11/23/2022	10:00 AM	resident	2920 Garfield		Leaves Pickup	sm	Resident said their leaves were missed and would like them picked up…Zone #3 , they were in that zone on Monday and Tuesday.	Street	y	bkb			

11/28/2022	8:25 AM	resident	2421 Walnut		Leaves Pickup	sm	Resident said his leaves were missed, please pick up…Zone #1, we will back there next week.	Street	y	bkb			
11/29/2022	1:05 PM	resident	3341 Grand Blvd		Leaves Pickup	sm	Resident said their leaves were not picked up last week and would like them picked up..They were just not out in time for the Holiday short week, they will be back in that route next week.	Street	y	bkb			
11/29/2022	2:45 PM	American Legion Post 180	Ridge Road & 2nd		Leaves Pickup	sm	The Legion has leaves to be picked up ..Ok	Street	y	bkb			
12/1/2022	2:30 PM	12	2700 Georgetown Drive		Pot Hole	sm	resident said there is a big pot hole on the 2700 block of Georgetown Drive…Gave to Sean	Street	y	bkb			
12/5/2022	9:00 AM	Lisa Gibson	3247 Duluth St		Leaves Pickup	kw	Resident has approx. 14 plastic bags of leaves in the parkway…They gone.	Street	y	bkb			
12/6/2022	11:20 AM	resident	97th and Erie St		Sign down/damaged	sm	resident said the stop sign has been knocked over …Gave to Dennis, needs new sign.	Street	y	bkb			
12/6/2022	1:00 PM	resident	100th street		Other: See Notes	sm	resident said there is a bag of garbage in the middle of the street and could someone please pick up…Dennis got it.	Street	y	bkb			
12/6/2022	3:00 PM	Tom &Karen Olsen	8816 Parkway Drive	(219) 885-8752	Sewer Backup	sm	Resident said he has backup coming up in his basement. He said he has never had this happen before and he thinks it is from something we did last Friday 12/2/22 with the jet truck Talked to her, that's not even the same line they were working on. Advised them to get a plumber.	WT/SW	Y	AK	12/6/22	3:11 PM	
12/9/2022	10:50 AM	Audry Byrd	2016 Terrace Drive	(219) 934-9147	Pot Hole	sm	Resident said there ar a lot of pot holes on the street and could it please be fixed…Will add to the list, for the next time we cold patch.	Street	y	bkb			
12/9/2022	10:50 AM	Audry Byrd	2016 Terrace Drive	(219) 934-9147	Other: See Notes	sm	Resident said the storm drain cover are sinking and cracked please check The street and curb are cracked, the storm basin itself is in fine shape.	WT/SW	Y	AK	12/9/22	12:32 PM	
12/9/2022	10:50 AM	Audry Byrd	2016 Terrace Drive	(219) 934-9147	Other: See Notes	sm	Resident wants to know if speed bumps can be put on the street because there has been 3 accidents…No,it's a hazard to our snow plows…She can contact John Banasiak of the Traffic Safety Board for more info.	Street	y	bkb			
12/12/2022	10:50 AM	resident	99th Place East and Delaware		Pot Hole	sm	resident said there a a few big pot holes the need to be fixed…Ok	Street	y	bkb			
12/12/2022	10:50 AM	Nick Zandstra	10202 Kennedy Avenue	(219) 924-1095	Water Break	sm	water main break - I let Aaron know This is their private line. It is shut down, they are getting Gatlin over there to repair it.	WT/SW	Y	AK	12/12/22	12:26 PM	
12/12/2022	11:15 AM	Maria Culbertson	3118 Ridge Road	(219) 616-0554	Street Light Out	sm	Resident said the street light by her house is out and asked if it can be fixed…Will add it to the next time we do street light checks next month.	Street	y	bkb			
12/12/2022	12:30 PM	Tom Coyle	9311 Spring Street	(708) 269-8523	Water On/Off Req.	sm	Resident would like the WATER SHUT OFF on Wednesday Dec. 14th at 7:45am because he is having work done. He will call back when he wants the water turned back on. Kyle has this off.	WT/SW	Y	AK	12/12/22	1:00 PM	
12/13/2022	3:15 PM	Derek Postma	3124 Laporte	(708) 705-2654	Water Break	sm	Resident said there is water bubbling up in the alley right behind his house. Not a water leak, this is the runoff from his property which has quite a lot of plastic sheeting under everything. Water had no chlorine and no cracks found in the main line.	WT/SW	Y	AK	12/14/22	8:16 AM	
12/15/2022	7:40 AM	Melvin Jonkman	9826 5th Street		Drainage Issues	sm	Resident said the storm drain in front of his house is clogged and has standing water I will send Jimmy over in a little bit to jet and clean this.	WT/SW	Y	AK	12/15/22	7:57 AM	
12/15/2022	1:50 PM	resident	2910 Cambridgeway		Other: See Notes	sm	Resident said we cut down some bushes on the berm and just lefi it. She wants someone to come back and pick it up please…That was not us…we do not maintain anything over there.	Street	y	bkb			
12/16/2022	8:10 AM	Angela Gergely	2838 Strong Street	(219) 484-7662	Sewer Backup	sm	Resident has backup from her toilet in the basement. She has 3 inches of water in her basement. Jimmy talked to resident and told her our side is good and it was their responsibility	WT/SW					
12/16/2022	12:10 PM	Elsa Collazo	8841 Woodward	(219) 588-8309	Sewer Backup	sm	Resident said she has sewer backup in her basement. Jimmy checked and it is the residents responsibility. He talked to the resident	WT/SW					
12/22/2022	9:00 AM	Mildred	3202 43rd Street	(219) 381-7916	Sewer Backup	sm	Resident said she has dirty water backup in her laundry tub..Residents Problem	WT/SW	y	bkb			
12/27/2022	11:45 AM	resident	ridgewood and Idlewild		Other: See Notes	sm	stop sign down from an accident..Gave to Jeff	Street	y	bkb			
12/27/2022	12:00 PM	PD	lincoln and southmoor		Sign down/damaged	sm	stop sign down…Gave to Jeff	Street	y	bkb			
12/27/2022	12:15 PM	resident	3128 Laporte		Other: See Notes	sm	Resident said her alley needs to be plowed…looks good to me.	Street	y	bkb			
12/27/2022	12:20 PM	resident	Georgetown Drive		Other: See Notes	sm	Resident asked if Georgetown Drive could be plowed…Brendan will get it.	Street	y	bkb			
12/29/2022	11:34 AM	Resident	9348 O'Day Drive		Christmas Tree Pickup	kw	Has a xmas tree out for pickup..Picked up.	Street	y	bkb			

Call Log 2023

Call Log 2023

Date	Time	Resident Name	Address	Phone #	Nature of Call	Received by:	Notes	Dept	Resolved Y	By Whom	Date	Time
1/3/2023	8:55 AM	Terri Traybsza	3440 41st Place	(219) 779-6686	Drainage Issues	sm	Resident said her backyard and the two houses west of her are flooded, please check.... Water leak at 3429 42nd St, being handled.	WT/SW	y	bkb		
1/3/2023	1:15 PM	William Finke	3539 Condit	(219) 713-1215	Snow Plow Damage	sm	Resident said the plow tore up the asphalt in front of 3545 Condit. It is the corner of Condit and Liable. He said it threw the asphalt on the parkway and sidewalk and he wants someone to come and clean it up. Resident also wants a phone call back from the supervisor....Cleaned up.	Street	y	bkb		
1/4/2023	10:15 AM	resident	9044 Ohio Place		Pot Hole	sm	resident said there is a big pot hole at the corner of Wirth and Ohio Place that needs to be fixed Sean and Dylan are getting that this evening	Street	Y	S	1/4/23	10:52 PM
1/6/2023	2:20 PM	Antonio Gonzales	9625 5th Place	(815) 600-6873	Sidewalk/Curb Issue	sm	Resident said his sidewalk is raised about 6 inches and he wants to know if the town can remove that section because it is dangerous. He will replace it in the summer. Please advise resident if it is possible. I will talk to resident and look at this.	Street	y	bkb		
1/6/2023	3:05 PM	James Pistorius	3514 Highway Avenue	(219) 407-2422	Pot Hole	sm	0	Street	y	bkb		
1/9/2023	12:55 PM	Eddie Tirado	9635 5th Place	(260) 993-2255	Other: See Notes	sm	Resident said his sump pump is running non-stop. He wants someone to come out to make sure there is not a break somewhere....No leak on our end that I could see, talked to resident.	WT/SW	y	bkb		
1/10/2023	3:03 PM		3307 Duluth St		Leaves Pickup	kw	Has bagged leaves out for pickup Sean got them	Street	Y	A	1/10/23	11:47 PM
1/10/2023	3:03 PM		Indy Blvd overpass between Wicker Park and Frog Hollow		Dead Animal	kw	Dead racoon, in center of road somewhere on the bridge..Dennis will look for him.	Street	y	bkb		
1/11/2023	10:23 AM	resident	Express Drive		Pot Hole	sm	Resident said there is 5 big pot holes on Express Drive and wants to know if they can be fixed. He said someone is going to blow a tire because it is so bad....Left a note for the night crew to get this.	Street	y	bkb		
1/12/2023	1:52 PM	Anthony	8033 Gordon Pl	(708) 378-8184	Other: See Notes	kw	Resident hasn't lived at the house long but is concerned that his sidewalk is cracked all the way down and the other houses on the block are fine. He believes it may be because of the fire hydrant in the parkway and would like someone to check it.looked at it I did not see anything wrong with hydrant will check again in spring	tim	y	tg	1/18/23	
1/13/2023	11:30 AM	Robert Childers	9433 5th Street	(219) 512-2555	Sewer Backup	sm	Resident said he has black sludge backup coming up in his laundry room. Resident wants someone to come and chec	WT/SW				
1/13/2023	1:50 PM	Robert Santana	9337 Waymond Avenue	(219) 512-6639	Pot Hole	sm	Resident has a big pot hole in front of his driveway and would like someone to come out and fix it...Kevin & Tim got it.	Street	y	bkb		
1/13/2023	2:50 PM	Victor Cruz	9229 Southmoor	(219) 577-7608	Tree/Branch Issues	sm	Resident said the tree in the parkway is protruding out of the ground and he is afraid that a bad wind/storm might make this tree fall over. Resident wants someone to come and look at it before it falls down. Please check and advise resident the tree looks fine to me	Tim	y	tg	1/16/23	
1/13/2023	3:10 PM	resident	Hook and 41st Street		Other: See Notes	sm	resident said the fire hydrant at Hook Street and 41st Street is leaking please check Trey will look at this today. Hydrant was left on one turn. It is fully off now.	WT/SW	Y	AK	1/0/00	
1/17/2023	10:31 AM	Don Dykstra	End of Whispering Oaks Ct	(219) 924-8461	Restorations	kw	The fence was knocked down by a plow. He said a temporary fix was done and wants to know when the panels will be replaced and why it is taking so long. Jeff is trying to find the parts and get a price on it today. Called and updated Mr. Dykstra kw 1/23/23 Acorn will be replacing the fence next Monday or Tuesday	Street	Y	AK	1/18/23	10:37 AM
1/17/2023	11:05 AM	resident	10029 Erie Place		Branches Missed	sm	1	Street	Y	AK	1/17/23	11:46 AM
1/18/2023	2:25 PM	Ashley Mihalic	2921 98th Street	(219) 789-7752	Other: See Notes	sm	Resident has two autistic children and wants to know if she can have an autistic sign put up in front of her house. Is this possible? Jeff said sjhe will need to contact Banasiak for info anout this. I gave the resident John's name and number to contact about the sign. sm	Street	Y	AK	1/19/23	7:11 AM
1/19/2023	9:40 AM	Deloris Tegtman	3523 43rd Street	(219) 924-1350	Drainage Issues	sm	Resident said the drain in front of her house has standing water and needs to be cleaned out Jimmy is heading there.	WT/SW	Y	AK	1/19/23	10:15 AM
1/19/2023	1:07 PM	resident	38th Place and Wildwood		Drainage Issues	sm	resident said the storm drain at the corner of 38th Place and Wildwood is filled with leaves Jimmy is heading over	WT/SW	Y	AK	1/19/23	2:18 PM
1/20/2023	1:15 PM	Russ Antczak	2727 North Drive	(219) 218-8917	Other: See Notes	sm	Resident has water backup in his furnace room and bathtub and would like someone to come and check our side. Please advise resident Jimmy checked this and it was not our issue.	WT/SW	Y	AK	1/23/23	8:05 AM
1/20/2023	2:20 PM	Robert Gutierrez	2023 38th Street	(312) 927-2612	Other: See Notes	sm	Resident had water bachup in his bathroom. He had a plumber come out and they said they hit a snag at our side and wants us to come out and check. He also wants to talk to the supervisor about this. He is at home now. Jimmy checkked our main and found no issue, I will have Matt televise this when we get a chance.	WT/SW	Y	AK	1/23/23	8:06 AM
1/24/2023	11:20 AM	Mildred Santos	3202 43rd Street	(219) 381-7916	Sewer Backup	sm	Resident said she has sewage backup in her basement sink and wants someone to come and check. Please advise resident Not our main, just one sink. Jimmy advised resident to contact a plumber	WT/SW	Y	AK	1/24/23	1:11 PM
1/25/2023	8:16 AM	Jack Stevenson	3032 45th St	(219) 864-8006	Sewer Backup	kw	Backup in laundry mat. Mains were checked, not our issue Spoke to owner and told them to call a plumber	WT/SW	y	AK	1/1/00	
1/26/2023	2:05 PM	David Taylor	9512 Hook Street	(219) 924-7702	Pot Hole	sm	Resident said there is a pot hole at 43rd and Kennedy by Seberger and one in the 2700 block of Georgetown Drive in the middle...Done	Street	y	bkb		
1/27/2023	1:25 PM	Nancy Mann	2103 Main Street	(219) 924-8432	Other: See Notes	sm	Resident has water coming up in her garage and does't know where it is coming from. Please check and advise resident Advised her she needs a new water heater,	WT/SW	Y	AK	1/27/23	4:23 PM
1/30/2023	8:50 AM	resident	Ridge Road		Pot Hole	sm	Resident said there is a big pot hole on Ridge Road going west on the bridge over Kennedy Ave..Filled	Street	y	bkb		
1/30/2023	10:30 AM	Michelle	8750 Liable Road		Other: See Notes	sm	Resident said she thinks there is a water main break because there is water by the curb on the side street (corner house) Replaced old rotting clamp	WT/SW	Y	AK	1/30/23	10:47 AM
2/3/2023	10:30 AM		2611 Martha		Other: See Notes	kw	Valve lid in the street was knocked off and broke by plow Kyle looked at it. I am starting a list of these we will repair ASAP.	WT/SW	Y	AK	2/3/23	1:48 PM
2/6/2023	10:25 AM	Corey Ohare	3100 98th Street	(219) 670-5286	Other: See Notes	sm	Resident had water backup in his drain over the weekend and wanted to know if something was going on because they weren't home using any water when this happenend. Please check and advise resident Nothing backed up on our end. Kyle and Jimmy spoke with the resident.	WT/SW	Y	AK	2/6/23	11:52 AM
2/7/2023	8:15 AM	Kathy Perry	3027 Duluth Avenue	(219) 629-1765	Dead Tree/Status?	sm	Resident said the tree in her parkway is dead and would like someone to come and look at it. She said there is a big hole in it and rotted wood is falling out and branches keep falling off. Resident is afraid the tree might fall over. Please check and advise resident. tree is bad after we have a tree contractor it will be removed	Tim				
2/9/2023	7:55 AM	resident	Highway and Parrish		Drainage Issues	sm	resident said there is standing water across Parrish and Highway Jimmy cleaned the basin and drained it.	WT/SW	Y	AK	2/9/23	10:30 AM
2/10/2023	8:30 AM	Crystal Palermo	9238 Grace St	(708) 670-7225	Restorations	kw	Part of the fence was removed to access the backyard and never restored. She would like a call with a timeframe of when she can expect the fence to be put back up. I called and left a message. Hopefully starting restorations in a few weeks and she is near the top of my very extensive list. I told her if she needs a more secure temporary fence or something of that nature before that to call back and I would get someone out ASAP.	WT/SW	Y	AK	2/10/23	9:15 AM
2/10/2023	9:45 AM	Chris Geffert	3252 North Drive	219-384-4939	Other: See Notes	sm	Resident has ankle deep water on the side of his house by his fence going to his backyard and rising Main break at 3245 Glenwood Ave. Repairing it today.	WT/SW	Y	AK	2/10/23	10:02 AM
2/10/2023	12:16 PM	Health Diagnostics	9003 Unit A Indy Blvd	(219) 836-5799	Other: See Notes	kw	Dr. said there is water pooling in the parking lot. Unknown if it is a water break or drainage issues. Aaron is checking We will be doing some exploratory digging to see what the problem is on Sunday night.	WT/SW	Y	AK	2/10/23	3:22 PM
2/10/2023	12:18 PM	Antonio Gonzales	9625 5th St	(815) 600-6873	Sidewalk/Curb Issue	kw	Antonio has further questions on sidewalk replacement. I informed him that we do not have pricing yet for this year. He wants to know if we only pull the existing or if we do any of the framing if he gets his own contractor. He also can't find his quote from last year which I told him was not good anymore....Talked to resident.	Street	y	bkb		
2/13/2023	8:30 AM	resident	3514 42nd Place		Pot Hole	sm	resident said there is a 20ft long pot hole in front of his house..Taken care of the best we can for now.	Street	y	bkb		
2/13/2023	10:30 AM	Samantha Baurghard	9221 Woodward	(219) 201-7124	Dead Tree/Status?	sm	Resident said both trees in the parkway are dead and would like them removed. Please check and advise resident need to wait and see if leaves appear	Tim	y	tg		
2/13/2023	2:45 PM	Dr Kumar	9003 Indianapolis Blvd A	(219) 629-3759	Other: See Notes	sm	Resident said pw was doing some work with a water main break last night and now his toilets will not flush.. Not our problem.	WT/SW	y	bkb		
2/13/2023	2:45 PM	Rich Weber	9214 Johnston	(219) 775-1254	Other: See Notes	sm	Derek called and wanted us to go do a chlorine test strip at this residence. (trying to see if there is a water main break there because residents sump pump is constantly running....No break, just ground water.	WT/SW	y	bkb		

2/14/2023	9:14 AM	Michael Stone	10358 Prairie Ave	(831) 241-3246	Other: See Notes	kw	South of this driveway, curb and road are sinking around the catch basin. Please check and advise. Resident believes it was possibly done a couple of years ago but is sinking again. Please update resident on findings, he says no rush.. Bob and Grant mortared inside of catch basin,road/curb not sinking, curb is cracked but not loose by catch basin.will replace curb later if need be.	WT/SW	y	bkb		
2/14/2023	12:00 PM	Resident	Wildwood and Ridgewood		Sign down/damaged	kw	Street sign was hit awhile ago and is damaged and leaning. Please fix...Sign is fine for now, needs a new post, will get it at a later date, this is actually Idlewild & Ridgewood.	Street	y	bkb		
2/14/2023	2:30 PM	Caryl Black	3243 North Drive	(219) 793-3679	Other: See Notes	sm	Resident said the b-box is raised up from the sidewalk and wants someone to come and fix it. She said someone is going to get hurt. Please check and advise...Matt lowered b box.	WT/SW	y	bkb		
3/15/2023	2:00 PM	Robin Huffman	3144 Farmer Drive	(219) 313-6222	Other: See Notes	sm	Resident said the blacktop in front of her house is crumbling and would like someone to come and look at it. Please check and advise resident...Derek/Mark are already aware of this, it was from the CCMG paving of last year.	Street	y	bkb		
3/15/2023	2:45 PM	Patty - Building dept	8945 Indianapolis Blvd		Other: See Notes	sm	Water Pressure Inspection - 8945 Indianapolis Blvd - 11:00am - Friday 2/17/23...Matt will do it.	WT/SW	y	bkb		
3/16/2023	2:00 PM	George Rylander	9030 Ohio Place	(615) 887-3661	Water Meter	sm	Resident said it is leaking at the water meter and wants someone to come out and check..Matt is going to check -residents responsibility	WT/SW				
2/16/2023	2:09 PM	John Johnson	9337 Indy Blvd	(630) 335-7892	Other: See Notes	kw	Please call John in the morning when you have time to go turn the water on at the bbox. Bbox was repaired today....Water turned on.	WT/SW	y	bkb		
2/17/2023	2:50 PM	Stanley Papastefan	3035 99th Street	(630) 776-2120	Water On/Off Req.	sm	Resident is having a plumber come out to do some work and needs the WATER SHUT OFF REQUEST - Tuesday 2/21 at 9:00am	WT/SW				
2/17/2023	3:20 PM	resident	8939 Kennedy Avenue		Street Light Out	sm	resident said the street light in front of her house is out..Ok, will add to the list next time I send it out to Midwestern.	Street	y	bkb		
2/21/2023	11:31 AM	resident	9248 Prairie Ave		Snow Plow Damage	kw	Parkway torn up by plow by the end of the driveway...Will add to my list.	Street	y	bkb		
2/21/2023	12:10 PM	Susan- building Dept	9326 Forrest	(219) 845-1411	Other: See Notes	sm	Sewer Repair Inspection 2:00pm today - Please call Susan at the building dept when finished	WT/SW				
2/22/2023	11:20 AM	Adam Kearn -Leeps	2543 Highway Avenue		Drainage Issues	sm	storm drain by the tracks is not draining We will jet this some tonight, the ditch needs to be dug out some and this is railroad property with pipeline running through it.	WT/SW	Y	AK	2/22/23	9:57 PM
2/23/2023	3:30 PM	Margarita Rodriguez	3110 97th Place	(219) 677-6877	Other: See Notes	sm	Resident said there was awater main break about 3 months ago and she is wanting to know when we will be there to do the restoration. She said her fence is also still down from then. Please check and advise resident Retorations wil be starting sometime this month	WT/SW	Y	AK	2/23/23	9:49 PM
2/24/2023	12:18 PM	Charles Zavesky	Ramblewood and Praire (north on Prairie on west side)	(219) 629-2114	Other: See Notes	kw	2 trees knocked down last year and they are asking to be put on a list 2 get more trees for this area	tim				
2/27/2023	12:05 PM	resident	Garfield Avenue		Pot Hole	sm	resident said there are several pot holes on Garfirld by Aide Rental and asked if they could be fixed...We will get them.	Street	y	bkb		
2/27/2023	2:55 PM	Patty - Building dept	2735 39th Place		Other: See Notes	sm	Patty called for an inspection - REPAIR & CLEANOUT INSPECTION - 2735 39th PLACE -TUESDAY 2/28 - After 2:00pm Please call Patty when the inspection is complete...Matt will do. --RESCHEDULED TO WEDNESDAY 3/1 AFTER 12:00--	WT/SW	y	bkb		
2/28/2023	11:15 AM	Kathy Smailis	8754 Parkway	(219) 588-7056	Other: See Notes	sm	Resident said she has a water leak by the shut off valve and meter and wants someone to come and check Matt is going	WT/SW				
2/28/2023	12:15 PM	Kathy Smailis	8754 Parkway	(219) 588-7056	Water On/Off Req.	SM	Resident is having a plumber come out to do some work and needs the WATER SHUT OFF REQUEST - Wednesday 3/1/23 at 10:00am...Gave to Matt & Dave.	WT/SW	y	bkb		
2/28/2023	2:25 PM	resident	Wildwood and Martha		Dead Tree/Status?	sm	Resident was walking and noticed several trees at the corner of Martha and Wilwood (northeast corner) and also north on Wildwood on the west side of the street around the 9000 block. Resident said the bark on the trees fell off and they are white. He said he is afraid that they may fall over. He wants someone to come out and check the trees so no one gets hurt need to wait for leaves to bud to see if they are dead	Tim	y	tg	3/1/23	
2/28/2023	2:30 PM	Susan- building Dept	3715 38th Street		Water On/Off Req.	sm	Susan called for an inspection - SEWER TAP & SANITARY TAP INSPECTION -3715 38th Street -WEDNESDAY 3/1 1:00PM for Action Plumbing Please call Susan when you are done...Gave to Matt & Dave.	WT/SW	y	bkb		
3/1/2023	8:30 AM	Dawn Fehr	2138 Ramblewood	(219) 314-4003	Dead Tree/Status?	sm	Resident said the tree in the easement is cracked from the storm and is afraid that it is going to fall on her fence, You can see the tree from the townhome side that is facing her backyard. Please advise resident does not belong to us resident has been advised,i will try to get her a number for the property management co	Tim	y	tg	3/6/23	
3/1/2023	10:25 AM	Mike Kokot	2124 Martha	(219) 718-4920	Pot Hole	sm	resident said there are pot holes that need to be fixed...Night crew will get them.	Street	y	bkb		
3/1/2023	10:25 AM	Mike Kokot	Lincoln Street	(219) 718-4920	Pot Hole	sm	resident said there are pot holes on Lincoln St right at the entrance to Lincoln Center that need to be fixed...Night crew wil get them.	Street	y	bkb		
3/1/2023	3:25 PM	Andrew Holinga	2918 Ross Street		Other: See Notes	sm	Trish from Town Hall asked if we can run the history for the resident. Very high usage for 1/24 and 2/22 read. Resident is trying to find out where the leak is. We need a meter ID sheet with the meter information on it to do this. Just leave it on my desk and we will get it tonight. Thanks.	WT/SW		AK		
3/1/2023	3:50 PM	Jennifer Hostetter	2241 45th Street	(219) 252-3480	Other: See Notes	sm	Resident said the 2 of the toilets will not flush and one is very slow. She wants someone to come and check our side.(Dr Mary Tilak Office) Please check and advise Jimmy checked these and they are fine. Not our issue.	WT/SW	Y	AK	3/1/23	11:57 PM
3/6/2023	9:00 AM	resident			Pot Hole	sm	resident said there are 2 big pot holes at Sandalwood turning into Juniper Trail. She said right now it is hard to see the pot holes because they are filled with water. Resident asked if they can be fixed...Yes	Street	y	bkb		
3/6/2023	9:05 AM	Shelby -PD	5th and 99th		Sign down/damaged	sm	Crosswalk sign is down and bent..Already picked up.	Street	y	bkb		
3/6/2023	9:10 AM	Shelby -PD	Kennedy and Wicker		Other: See Notes	sm	the manhole cover is in place but they said the ring is cracked. Please check	WT/SW				
3/6/2023	10:45 AM	Brian Morton	3524 Franklin	(219) 742-3106	Other: See Notes	sm	Resident said there is a 2 ft pile of rock in the alley just east of his house. He said it is from a plow and asked if someone can come out and level it please...Not our plows, havent plowed alleys but once this season and it was around Christmas, but we will take a look at it and grade alley if need be when it is drier...We didnt plow alleys this past snow 3/3/23	Street	y	bkb		
3/6/2023	12:45 PM	Luke - J A S Plumbing	2817 Highway	(219) 201-4263	Water On/Off Req.	sm	Luke from JAS Plumbing requested the water to be shut off because they are there now working. Kyle is going	WT/SW				
3/6/2023	3:15 PM	Kathy	9429 Wildwood	(219) 677-5809	Water Pressure	sm	Resident has low water pressure in all her faucets and wants someone to come and check. Kyle is going someone at residence somehow shut the valve off in the house. It is fixed now	WT/SW	y			
3/6/2023	3:15 PM	Chris Vermejan	8411 5th Street	(219) 713-5898	Snow Plow Damage	sm	Resident said the snow plow damaged the curb in front of his house and also the parrkway...We will add to my list.	Street	y	bkb		
3/6/2023	3:20 PM	resident	2820 Eder		Pot Hole	sm	resident said there are several large pot holes in the alley behind Windsor Laundromat...Will get them this week.	Street	Y	bkb		
3/6/2023	3:20 PM	resident			Pot Hole	sm	resident called and said the alley between Duluth and Grand off of Kennedy has several potholes...We will get them this week.	Street	Y	bkb		
3/7/2023	10:15 AM	resident			Pot Hole	sm	resident said there are several pot holes on the side street off of Ramblewood between Old National Bank and Office Depot that need to be fixed....Ok	Street	y	bkb		
3/7/2023	12:25 PM	resident	3228 George Street		Sign down/damaged	sm	resident said the speed limit sign is leaning over...Gave to Jeff	Street	y	bkb		
3/7/2023	1:49 PM	June	Road behind Old National Bank on Indy		Pot Hole	kw	Per Knesek we maintain the road running north and south, south off Ramblewood Dr. between Office Depot and Old National Bank. Big "truck" holes..See line 77	Street	y	bkb		
3/7/2023	3:20 PM	Janice Tokarz	2940 Clough	(219) 588-4424	Dead Tree/Status?	sm	Resident said all 3 trees in the parkway are dead and dropping branches. Please check and advise resident called 4/21/23 no answer trees are not dead	Tim	y	tg		
3/8/2023	10:30 AM	resident	Kennedy Ave by Dunhill Cleaners		Other: See Notes	sm	Resident said when he was riidng his motorcycle he ran over the sewer cap on Kennedy by Dunhill (west side) and there was about a 1 inch steel piece sticking up and he thought it might have cut his tire but it did not. Please check Repaired	WT/SW	Y	AK	3/8/23	1:07 PM
3/8/2023	4:14 PM	Edwina	9115 B Kennedy Ave	(219) 924-7477	Other: See Notes	kw	Called because there has been sand accumulating on the sidewalk for at least the last month and believes the bbox might be leaking. Kyle checked and it looks like it is the sprinkler system. The sand is dried and located by the sprinkler heads. Advised resident to let whomever starts up the sprinkler system to check for a broken line.	WT/SW	y	kw		
3/9/2023	12:00 AM	Resident	9134 Southmoor and 9228 Southmoor		Pot Hole	kw	Pot holes in the middle of the road by these addresses..Gave to Kevin & Tim	Street	y	bkb		
3/9/2023	10:45 AM	Daniel Ramos	8531 Henry Street	(312) 927-3169	Other: See Notes	sm	Resident said when we were putting gravel down in the alley we pulled up the wifi cable that was buried and left it out. He said someone told him that it would be fixed and is wanting to know when...Gave info to AT&T yesterday, will send another message to our contact.	Street	y	bkb		
3/13/2023	11:50 AM	Maria Gonzalez	8704 Cline Avenue	(219) 838-5554	Other: See Notes	sm	Resident said her basement is flooded and wants someone to come and check She has a sticking float on her sump pump, which I have told her the last ten times. It's a quick fix and she is older and very nice, so we handled it.	WT/SW	Y	AK	3/13/23	1:01 PM

3/13/2023	1:57 PM		Prairie and Cypress		Other: See Notes	kw	Kyle shut the water off at the bbox today for the plumber who will be repairing a valve in the pit. He will call back when the valve is replaced to have the water turned back on	WT/SW	y	kw		
3/14/2023	12:10 PM	Marcia Lockrey	9535 5th Street	(219) 924-5214	Sidewalk/Curb Issue	sm	Resident said the sidewalk in front of her neighbors house just to the south of her has three squares that are raised up and a lady fell this morning while walking. Resident said she was older but said she was just going home. Resident also said the owner will not fix her sidewalk and she wants someone to come out and look at it before someone else gets hurt.	Street				
3/14/2023	12:33 PM	Robert Hastings	9234 Prairie Ave	(219) 838-6743	Pot Hole	kw	Pot holes in front of this residence, 4 or 5...Gave to Sean.	Street	y	bkb		
3/15/2023	12:25 PM	brian Rykman	southmoor & kennilworth	(219) 746-9623	Water Break	sm	resident called and said there might be a water main break at the corner of Southmoor and Kennilworth, It is wet from the center to the curb Slight leak, locates are called in and we will be doing this first thing in the morning.	WT/SW	Y	AK	3/15/23	1:02 PM
3/15/2023	1:15 PM	Dawn Malangoni	3316 Franklin	(219) 689-7107	Water Pressure	sm	Resident said ever since her water meter was changed the water pressure keeps changing from low to high. Kyle is going	WT/SW				
3/15/2023	1:30 PM	resident	45th and Prairie		Other: See Notes	sm	Resident said the turn lane lines are hard to see and asked if they can be repainted. The turn lane lines on Hart and Indianapolis also...Wil do.	Street	y	bkb		
3/15/2023	3:15 PM	Taylor Adams	9616 Farmer Drive	(219) 314-8551	Sidewalk/Curb Issue	sm	Owner of Farmer Drive Apartments would like information on the sidewalk replacement program. They are planning on doing this in June and would like to talk to you about the program....Will do	Street	y	bkb		
3/16/2023	10:18 AM	Rick Sutton	3506 42nd St	(219) 488-9127	Leaves Pickup	kw	Resident has approx. 5-8 leaf bags for pick up, putting them out now..Gave to Jeff.	Street	y	bkb		
3/16/2023	10:39 AM		9236 Erie		Sewer Backup	kw	Mark received a call stating sewage was backing up onto the parkway. Sending Jimmy to check it Private line in the back is backingup, resident was informed they need to get a plumber out ASAP. Possible cross connection with the storm sewer to be chekced out when it dries up a little.	WT/SW	Y	AK	3/16/23	12:12 PM
3/17/2023	10:45 AM	Kayvionne Cook	2611 Hart Road	(314) 399-7294	Other: See Notes	sm	Resident said his water meter was leaking and wants someone to come out and check it Kyle reaplaced their meter. Their hot water heater was also leaking.	WT/SW	Y	AK	3/17/23	11:09 AM
3/17/2023	1:25 PM	Esther Sandoval	3034 Eder	(219) 713-4987	Sewer Backup	sm	Resident said they have sewer backup in the basement/toilet and wants us to check our side. Please advise resident Truck 27 is heading there now.Not our main	WT/SW	Y	AK	3/17/23	1:33 PM
3/20/2023	8:10 AM	Anjelica Thompson	9228 Kleinman	(219) 895-0779	Other: See Notes	sm	Resident said she has a hole at the beginning of her driveway and can see the main. She put a cone over it until someone can come and look at it. Calling in locates today, we will be replacing the structue soon.	WT/SW	Y	AK	3/20/23	9:42 AM
3/20/2023	1:20 PM	resident	45th and 5th		Other: See Notes	sm	resident said one of the traffic lights on 45th is facing 5th...Midwestern has been informed.	Street	y	bkb		
3/20/2023	11:10 AM	Joey Gonzalez	8834 Highland Street	(219) 256-6384	Other: See Notes	sm	Resident said a dump truck went down the alley/easement and dumped a lot of construction material. There is also a tree that fell down and is laying in the alley...This is not an alley, but an easement, it looks like someone had a tree cut down behind said address and a few of the logs are still laying along said fence line, also the debris that is out there is behind the neighbors house along the outside of the fence, will have to keep an eye on it and if still there in the coming days code enforcement may have to be called by us or the complaining caller of this phone log.	Street	y	bkb		
3/21/2023	2:00 PM	resident	9129 Woodward		Leaves Pickup	sm	resident has 2 bags of leaves to be picked up...Gave to Jeff	Street	y	bkb		
3/21/2023	2:15 PM	Mike Larson	Parkway and Terrace	(219) 614-4578	Other: See Notes	sm	Resident wants to know if the curbs can be repainted on Parkway and Terrace...Yes they can.	Street	y	bkb		
3/21/2023	2:15 AM	Mike Larson	Parkway and Terrace	(219) 614-4578	Other: See Notes	sm	Resident said there is always a puddle of water at the corner of Parkway and Terrace where the mailboxes are and it always freezes in the cold weather making it difficult for residents to get to there mailbox. Resident wants to know if something can be done to fix this. Please advise resident Water pooling in the curbline. Not a leak.	WT/SW	Y	AK	3/21/23	2:57 PM
3/22/2023	1:35 PM	Mary Dec	2649 Georgetown Drive E1	(219) 413-1591	Water Pressure	sm	Resident has low water pressure in her faucet so she replaced it and still has low pressure. She wants someone to come out and check. Kyle checked, the problem is in her line. He advised her to contact a plumber.	WT/SW	Y	AK	3/22/23	2:29 PM
3/23/2023	10:30 AM	Kathy Serna	3448 Garfield	(708) 560-3296	Dead Tree/Status?	sm	Resident said the tree in the parkway is dead and wants us to come out to check. Please advise resident waiting for leaves looked at tree on 4/20/23 and trees are not dead	Tim	y	tg		
3/23/2023	10:30 AM	Kathy Serna	3448 Garfield	(708) 560-3296	Sidewalk/Curb Issue	sm	Resident wants to know about the sidewalk replacement program. She has 3 squares that are bad.	Street				
3/23/2023	1:54 PM	Darla Pruitt	7935 Glenwood	(219) 838-3945	Dead Tree/Status?	kw	There are 2 trees in the parkway, 1 is possibly dead. Please check and advise we will take down north tree	Tim	y	tg		
3/23/2023	2:00 AM	Sara Manzo	2711 Wicker	(773) 504-3549	Other: See Notes	sm	Resident said the tree in the alley behind her house is in the way when she pulls in and out of her driveway. This tree is between the alley and Ridge Road. Resident wants to know if we will cut the tree down Please check and advise resident spoke with residents son told him we do not take down live trees	Tim				
2/24/2023	2:40 PM	Larry Krejci	3319 Highway	(219) 614-6437	Water Pressure	sm	Resident has low water pressure in all faucets Kyle is going	WT/SW				
2/27/2023	9:25 AM	Rosalie Faso	2129 Briarwood Circle	(219) 513-9920	Other: See Notes	sm	Resident said her parkway trees were removed last year. she wants to know if there is a program to replace the trees. Please advise resident	Tim				
2/27/2023	10:00 AM	Danny Ramos	8531 Henry Street	(312) 927-3169	Water Pressure	sm	Resident said he has low water pressure in his water spicket outside and wants to know if someone can come out to check...Kyle will check it out.	WT/SW	y	bkb		
2/27/2023	1:45 PM	resident	Saric Court		Pot Hole	sm	Resident said there are several pot holes and wants to know if can you fix them...Gave to Sean/Tyler	Street	y	bkb		
2/27/2023	1:45 AM	resident	Saric Court		Other: See Notes	sm	Resident said the hydrant does not have a marker on it. Can you please put one on (by Tim Malloy's office)...Gave to Kyle to check out.	WT/SW	y	bkb		
2/27/2023	2:30 PM	Michelle Jones	2932 E. 4th Place	(219) 895-9291	Other: See Notes	sm	Resident said there is a leak by the water meter and wants someone to come and check...Kyle handled it.	WT/SW	y	bkb		
3/29/2023	9:15 AM	resident	5th and Clough		Other: See Notes	sm	Resident said there is gravel and broken up markers all over the road at 5th and Clough and in front of 8832, 8834 Parkway. Resident wants someone to come out and clean it up...This is from Nipsco doing work on the corner, they stoned the street where they dug up their gas main, whatever flags are there are from the locates, its not our cleanup and Nipsco knows about it.	Street	y	bkb		
3/29/2023	3:45 PM	Tim Pistoria	3514 Highway Avenue	(219) 407-2422	Pot Hole	sm	Resident said there are pot holes in the alley and asked if they could please be fixed...Sean is grading alleys today and this is on the list.	Street	y	bkb		
3/30/2023	10:15 AM	Doug Werner	9610 Bvld Drive	(219) 781-0423	Other: See Notes	sm	Resident turned off the water at the valve to have some work done and now it is leaking at the valve. Kyle is going	WT/SW				
3/30/2023	2:10 PM	Cheryl Pontow	9545 5th Street	(219) 765-1246	Dead Tree/Status?	sm	Resident said the tree in the parkway by the driveway is dead. Branches keep falling off and bark is missing from the tree. Please check and advise resident we will remove tree	Tim				
3/30/2023	3:54 PM	Jacqueline	3424 Ross Pl	(219) 765-4201	Sewer Backup	kw	Resident is having issues with her toilet. Jimmy cleaned out the trough and will suck it up when the jet truck is back in service	WT/SW	y	kw		
3/31/2023	1:05 PM	Karen Nauracy	3941 Wirth Road	(219) 805-2202	Other: See Notes	sm	Resident said she has water in her back yard by the air conditioner and behind the garage. She wants to know if someone can come out to check to make sure it is not a leak talked to resident and told her that she needs to get a plumber to fix the sewage problem	WT/SW				
4/3/2023	8:15 AM	Scott	3509 - 3511 45th Street	(219) 746-8634	Sewer Backup	sm	Resident said he has sewage backup in his yard and wants someone to come over and check. Please advise resident Not our issue, Jimmy talked to him.	WT/SW	Y	AK	4/3/23	11:02 AM
4/3/2023	11:00 AM	resident	8812 Kennedy Avenue		Leaves Pickup	sm	Resident has over 10 bags of leaves to be picked up...Picked up	Street	y	bkb		
4/3/2023	10:45 AM	Mark Hines / Town Club	2904 45th Street	(219) 741-2112	Other: See Notes	sm	Owner said there has been water by the curb in front of town club (south side of 45th) for about a week. He wants to know if someone can come and look at it. We will have to keep an eye on this. When the jet truck comes back we may open a hole and see if we can tell where the water is coming from.	WT/SW	Y	AK	4/3/23	2:55 PM
4/3/2023	3:00 AM	Dan	3541 Jewett Avenue		Pot Hole	sm	Resident said the town graded the alley last week but there is a big hole behind his garage. He asked if it can be fixed,,No issues in alley that I could see.	Street	y	bkb		
4/4/2023	8:20 AM	resident	2618 Wicker Avenue	(219) 805-5468	Leaves Pickup	sm	Resident will have bagged leaves after 2:30pm today to be picked up...No bags were out.	Street	y	bkb		
4/4/2023		Tim Valente	8906 Branton	(219) 805-5468	Dead Tree/Status?	kw	Tree near street (no parkway) is possibly dead. Dropping a lot of branches in the road way during storms. Please check we will remove north tree	Tim	y	tg		
4/4/2023	3:00 PM	resident	3106 Condit		Other: See Notes	sm	resident said the tree in the parkway has a big branch that is dead and they are afraid it might fall and hurt someone...No issues, Everything seemed fine to us.	Street	y	bkb		

4/5/2023	9:15 AM	resident	3200 block of Ridge Road		Street Light Out	sm	The street light in the middle of the 3200 block of Ridge Road (between Highland and Cottage Grove) on the south side of the street is out...Ok	Street	y	bkb		
4/6/2023	1:55 PM	Grace Mendoza	3429 42nd Street	(219) 614-2652	Restorations	sm	Resident wants to know when her yard and fence will be repaired. She said she is having a graduation party the middle of May and would like it fixed before that. Please call and advise resident of estimate of date of repairs. I will call her, it should be all done by then.	WT/SW	Y	AK	4/6/23	3:21 PM
4/6/2023	3:00 PM	Lizbet Padilla	9317 Wildwood Drive	(219) 455-7347	Dead Tree/Status?	sm	Resident said both trees in the parkway are dead and infeste with ants. Please check and advise resident when the tree was checked I saw no ants and it is not dead	Tim				
4/6/2023	3:05 AM	Karen Christoffels	8938 Pettit	(760) 412-1806	Dead Tree/Status?	sm	Resident said the tree in the parkway by the lamp post is dead. Please check and advise resident	Tim				
4/10/2023	10:23 AM	Jose Perarta	8424 Cottage Grove Ave	(312) 498-9676	Dead Tree/Status?	kw	Check status of tree, roots bringing up sidewalk and walkway resident has been advised we do not take down trees unless they are dead	Tim	y	tg		
4/10/2023	10:23 AM	Jose Perarta	8424 Cottage Grove Ave	(312) 498-9676	Sidewalk/Curb Issue	kw	Resident would like a quote on sidewalk replacement...Talked to resident.	Street	y	bkb		
4/10/2023	3:42 PM	Resident	9223 Grace Pl		Leaves Pickup	kw	Resident will have bagged leaves out Wednesday (4/12/23) morning for pickup...Gave to Tim	Street	y	bkb		
4/11/2023	9:15 AM	resident	9505 Kennedy		Leaves Pickup	kw	Resident has about 10 bags of leaves on side of house (43rd side) parkway...Gave to Tim	Street	y	bkb		
4/11/2023	9:18 AM	Resident	42nd Pl and Liable		Sink Hole	kw	Claims there is a large sink hole at this intersection by the manhole, NE Corner The basin needs mortar, we will get to it this week.	WT/SW	Y	Ak	4/11/23	2:38 PM
4/11/2023	11:50 AM	Alex Brown	Bike Trail, 1/4 south of 81st		Drainage Issues	kw	Requesting jet truck to clear a clogged culvert on the bike trail. There is standing water The closest culvert is right off Grand. We will jet it tomorrow and see if it clears up part of the problem. There has been water standing in that area for a very long time.	WT/SW	Y	AK	4/11/23	3:24 PM
4/11/2023	1:36 PM	Sandra Mason	3242 Garfield Ave	(219) 796-7296	Sidewalk/Curb Issue	kw	Resident would like a quote/information on sidewalk replacement...talked to resident	Street	y	bkb		
4/12/2023	2:49 PM	John Son	2717 Ross	(219) 743-2403	Other: See Notes	kw	Alley between Ross and Gordon needs to be graded, please...Will add to the list.	Street	y	bkb		
4/13/2023	12:49 PM	Resident	3121 Highway Ave		Other: See Notes	kw	Has loose leaves on the parkway if the truck goes back out next week. Also is asking if the alley behind them can be grated. Lots of pot holes...Vac will be out and will add alley to the list.	Street	y	bkb		
4/13/2023	1:28 PM	Burton Brin	2741 North Dr	(219) 838-7906	Restorations	kw	Had a water main break in September, pulled up mesh today and there are bald spots that he would like seeded and possibly level out the ground. Not complaining, was instructed to reach out to us if there were any issues He is back on the list for a littl emore dirt and seed	WT/SW	Y	AK	4/13/23	1:39 PM
4/13/2023	2:00 PM	Joe	9506 Forrest Dr	(219) 201-6549	Valve Issues	kw	Resident called stating he all the sudden today lost all water. Kyle went over, unable to figure out why there is no water. Will be digging the bbox. 4/14/23 resident admitted to turning the bbox to try and get more pressure. Crew was able to exercise the valve and get the water back on	WT/SW	y	KW	4/14/23	9:50 AM
4/14/2023	11:52 AM	Eli Zak	3032 100th St	(219) 924-7078	Sidewalk/Curb Issue	kw	Resident would like a quote for sidewalk and apron replacement...Talked to resident	Street	y	bkb		
4/14/2023	12:02 PM	Nancy Wellman	8231 5th St	(219) 805-1954	Tree/Branch Issues	kw	check status of tree, roots bringing up sidewalk tree is not dead resident has been advised	Tim	y	tg		
4/17/2023	9:20 AM	Colin Templeton	2729 North Drive		Water On/Off Req.	sm	Resident needs his water off for work being done Kyle is going there	WT/SW				
4/17/2023	11:20 AM	Rosalee Faso	2129 Briarwood Circle	(219) 513-9920	Dead Tree/Status?	sm	Resident was calling to find out when her trees will be planted in the parkway. She also said the flags were removed and the locates need to be done again. Please advise resident no tree's will be planted resident has been advised there are utilities in the way	Tim	y	tg		
4/18/2023	8:10 AM	Doug Werner	9610 Blvd Dr	(219) 781-0423	Water On/Off Req.	sm	Resident needs his water off Thursday 4/20 at 8:00am. He is having some work done	WT/SW				
4/18/2023	10:15 AM	Joey Gonzalez	8834 Highland Street	(219) 256-6384	Other: See Notes	sm	Resident said someone dropped off a bunch of constrution material in the easement in back of his house. He wants to know if someone can come and pick all of it up...We don't pick up constuction materials from residents, he can call building department and talk to them.	Street	y	bkb		
4/20/2023	8:45 AM	Martin Castellanos	3218 Farmer Driver	(773) 858-6179	Restorations	sm	Resident wants to know if restorations are going to be done in the parkway. (this is from work that was done from last year) Please advise resident This area was part of the curbs and street project and was never restored. We can do it if the company that did the work isn't going to come back and finish. I talked to the resident and Derrick about it.	WT/SW	Y	AK	4/20/23	10:09 AM
4/20/2023	9:15 AM	Derek Postma	highland	(708) 705-2654	Other: See Notes	sm	resident said we fixed a water leak in the alley last year and he said it is definitely still leaking and could we come and check. There was never a leak there. It is storm runnoff from his giant, concrete backyard. We shall, however, keep an eye on it and I will get in touch with him.	WT/SW	Y	AK	4/20/23	10:00 AM
4/20/2023	10:00 AM	Lashree Branch	8112 5th Street	(708) 439-4976	Sidewalk/Curb Issue	sm	Resident would like information on the sidewalk replacement program.	Street	y	bkb		
4/21/2023	3:20 PM	Larry Dora	2000 Idlewild CT	(219) 775-5623	Sidewalk/Curb Issue	sm	Resident would like information on the sidewalk replacement program	Street	y	bkb		
4/21/2023	3:30 PM	Robert Widiger	9916 Kennedy	(219) 922-8122	Restorations	sm	Resident said hydrant work was done and he wants to know when the restoration will be done Currently working our way through resto list.	WT/SW	Y	AK	4/26/23	11:09 AM
4/22/2023			2621 40th Pl. (house to the east)		Water Break	kw	Neighbor reported via voicemail water leaking from the edge of the driveway for the past month. Kyle is checking 4/24/23 Per Kyle the area is dry as of this morning. They will keep an eye on it.	WT/SW				
4/24/2023	11:00 AM	Marcia Lockrey	9535 5th Street	(219) 924-5214	Dead Tree/Status?	sm	Resident said the tree in the parkway just south of her house is causing the sidewalk to raise and someone fell. She wants someone to come out and look at it because her neighbor won't do anything about it. Please check and advise resident was advised we only take down trees if they are dead	Tim	y	tg		
4/24/2023	12:15 PM	Linda Manly	3107 98th St	(847) 489-7411	Restorations	kw	Had a water main break between her yard and the neighbor. Fence is still down and debris piled in her yard. Will the raspberry bushes that were cut down be replaced? She would like to know where she is at on the restoration list. Please call her.Called and spoke with the homeowner	WT/SW	Y	AK	4/26/23	11:08 AM
4/25/2023	9:15 AM	Kashelle Benn	3347 Martha Street	(708) 548-7090	Sewer Backup	sm	Resident said she has backup in her basement, shower and toilet. (water & sewage) She had a plumber out and he rodded it out and said it was clear. Plumber told her it was on the towns side. She wants someone to come and check...Jimmy and Adam went there and its not our problem.	WT/SW	y	bkb		
4/25/2023	11:15 AM	tanya & Terry Strouse	9007 Parrish Avenue	(708) 539-5199	Sidewalk/Curb Issue	sm	Resident would like information on the sidewalk replacement program	Street	y	bkb		
4/26/2023	3:40 PM	Kathy Hilburn	2732 Eder Street	(219) 407-4952	Water On/Off Req.	sm	Resident needs her water off. Her hot water heater is leaking Kyle is going there/ water is off per Kyle / resident will call when she wants it back on 4/27/2023	WT/SW				
4/27/2023	9:45 AM	Doug Werner	9610 Bvld Drive	(219) 781-0423	Restorations	SM	Resident said work was done by his bbox and is wanting to know when the mulch will be put down. He requested natural hardwood mulch Jeff is picking it up tomorrow and we will get it down after that.	WT/SW	Y	AK	4/27/23	1:29 PM
4/27/2023	3:00 PM	Jean Wierman	8930 Ohio Place	(219) 923-0104	Other: See Notes	sm	Resident has no running water (Ellen Smith-neighbor called for resident 219-902-6106) Please check and advise resident. Kyle is going to check - not our issue, sewer line is backing up inside - told resident that they needed to call a plumber	WT/SW	Y	AK	4/28/23	8:23 AM
4/28/2023	8:53 AM	resident	bike path north of Cady Ditch		Other: See Notes	sm	Resident called and said there is sewage running into the cady ditch from just north of the ditch on the bike path Force main break. Fixed 4/28/2023	WT/SW	Y	AK	5/1/23	8:26 AM
4/28/2023	1:55 PM	Joni Sazcawa	9139 Southmoor	(219) 712-5437	Sidewalk/Curb Issue	sm	Resident would like information on the sidewalk replacement program	Street	y	bkb		
5/1/2023	9:45 AM	Michael Nealson	9610 Erie Street	(708) 259-6607	Other: See Notes	sm	Resident has a leak by the shut off valve. Not our issue, landlord will call when he needs water shut off to reapir the valve later today.	WT/SW	Y	AK	5/1/23	10:21 AM
5/1/2023	9:45 AM	Taylor	9618 Farmer Drive	(219) 314-8551	Sewer Backup	sm	Taylor said there is sewage backup in the laundry room and wants us to check our side Our main is fine, advised the maintenance guy to have a plumber check their lines again.	WT/SW	Y	AK	5/1/23	10:16 AM
5/1/2023	10:00 AM	resident	glenwwod east of Grace		Pot Hole	sm	Resident said there is a pothole on Glenwood just east of Grace Street Gave to Sean	Street	Y	AK	5/1/23	10:25 AM
5/1/2023	10:05 AM	resident	Laverne and Grace			sm	Resident said there is a pothole at Laverne and Grace Street Gave to Sean	Street	Y	AK	5/1/23	10:25 AM
5/1/2023	10:15 AM	Antonio Gonzales	9625 5th Street	(815) 600-6873	Sidewalk/Curb Issue	sm	Resident would like information on the sidewalk replacement program	Street	y	bkb		
5/2/2023	7:40 AM	Christine Garcia	9129 Prairie Avenue	(773) 562-1113	Sidewalk/Curb Issue	sm	Resident would like information on the sidewalk replacement program	Street	y	bkb		
5/1/2023	7:45 AM	Lynn Rhodes	9320 Waymond	(219) 793-3533	Tree/Branch Issues	sm	Resident said branches are falling off the tree in the parkway and would like soomeone to come out and check the tree resident was advised we only take down trees if they are dead	Tim	y	tg		
5/2/2023	2:40 PM	Julia Martinwz	10035 Erie Place	(219) 359-7034	Water On/Off Req.	sm	Resident needs her Water shut off Wednesday 5/3 at 11:00am because a plumber is coming to do work Gave to Kyle	WT/SW	Y	AK	5/4/23	8:24 AM

5/3/2023	10:35 AM	Taylor Adams	9618 Farmer Drive (middle entrance)	(219) 314-8551	Other: See Notes	kw	Property has sewage backup, we were out there Monday and found the issue to be in the private line, the main line was clear. They have plumbers out there now that are saying the backup is now on our side. Called Aaron he is sending someone over Taylor believes the town should pay the bill. When the lines were rodded today the backup was pushed into the main line. Griffith is being called for a jet truck to jet our line that is now blocked from everything that was pushed out of the private line. Taylor was advised to call Public Works if she had any further questions of responsibility.	WT/SW	y	kw		
5/3/2023	3:30 PM	Jeremy - Nipsco	8720 Orchard	(219) 798-3239	Other: See Notes	sm	Jeremy (Nipsco) said he has a crew at 8720 Orchard working and they exposed a water line. It is not leaking but wants someone to go out and check. Aaron is going	WT/SW	Y	AK	5/4/23	8:23 AM
5/4/2023	12:45 PM	resident	3814 Sandalwood Drive		Other: See Notes	sm	resident has several bags out to be picked up, the bags are in front of the pond...Put on Loader stop for Friday	Street	y	bkb		
5/10/2023	8:00 AM	Dave	3144 Farmer Drive	(219) 314-4847	Pot Hole	sm	Resident said there is a pot hole in front of his house and wants to know if it can be fixed...CCMG problem, Derek is aware of this and it will be fixed.	Street	y	bkb		
5/10/2023	1:10 PM	Tim Thomas	2925 Franklin Street	(219) 614-6030	Water On/Off Req.	sm	Resident is having plumbing work done and needs the WATER SHUT OFF - Monday 5/15/2023 at 9:00am Gave this to Kyle. Water is back on - per Kyle	WT/SW	Y	AK	5/11/23	12:15 PM
5/11/2023	8:27 AM	Bob Sexton		(219) 776-4929	Other: See Notes	sm	Resident asked if the yellow lines can be repainted on Delaware and 97th Place...There has never been a yellow lines here	Street	y	bkb		
5/11/2023	10:30 AM	Rita	3516 Ross Place		Other: See Notes	sm	Resident said someone put a tv in her front yard and wants to know if we can pick it up because she can't pick it up. She has no isea who put it there We got it picked up.	Street	Y	AK	5/11/23	12:08 PM
5/11/2023	12:15 PM	Resident	8730 Prairie Ave		Other: See Notes	kw	Has bagged leaves out for pickup Gave to Sean	Street	Y	AK	5/12/23	7:13 AM
5/11/2023	1:25 PM	resident	3200 block Ridge Road		Street Light Out	sm	Street light out on the 3200 block of Ridge Road, south side of the street..Ok	Street	y	bkb		
5/11/2023	3:05 PM	Daryl Sills	10030 5th Street		Sink Hole	sm	Resident said there is a sink hole right next to the sewer in front of his house It has been coned and will be repaired ASAP	WT/SW	Y	AK	5/12/23	7:13 AM
5/15/2023	8:30 AM	PD	Kennedy Avenue		Tree/Branch Issues	sm	PD said there is a big branch hanging on Kenendy Avenue between 9315 and 9323 on the east side of the street, afraid the branch is going to fall and hit a car...Will take a look at it	Street	y	bkb		
9/15/2023	8:40 AM	Dan Wojnicz	2815 Eder	(219) 718-4414	Water On/Off Req.	sm	Resident is having a plumber come this morning to fix his shut off valve at 9:00am and needs his water shut off please...Kyle is on it. Water was turned back on per Kyle 2:35pm	WT/SW	y	bkb		
5/15/2023	9:43 AM	Danny Pecenica	9609 Blvd Drive	(219) 201-7386	Other: See Notes	sm	Resident has a plumber there rotting out the sewer line and wanted us to check our side Sent Adam, our side was OK	WT/SW	Y	8:43 AM	5/16/23	
5/15/2023	11:10 AM	Tom Gozdecki	2655 Garfield	(219) 746-9744	Other: See Notes	sm	Resident wants someone to come look at Garfield just west of Kennedy Avenue. He said it is terrible and needs to be fixed. Please asdvise resident, he wants to talk the Brian...Left message and explained our plan for repairing said area.	Street	y	bkb		
5/16/2023	8:32 AM	Carlson	2852 Parkway dr	(219) 838-6113	Other: See Notes	kw	Has about 24 yard waste bags out for pickup	Street	y	bkb		
5/16/2023	11:30 AM	Ralph Thompson	9228 Kleinman Road	(219) 577-5770	Other: See Notes	sm	Resident said work was done in front of his driveway and wants to know when we are coming back to repave. Please advise resident...The week after Memorial Day weather permitting.	Street	y	bkb		
5/16/2023	2:36 AM	Eve Dykstra	3124 - 3128 Laporte Street	(708) 261-7966	Water Break	SM	Resident thinks there is a water main break in the alley between 3124 -3128 Laporte. She said there is quite a bit of moving water We are going to do some exploratory digging to see if we can find something leaking. Water tested postitive for chlorine, no water moving, but we are going to check it out next week.	WT/SW	Y	AK	5/17/23	6:07 AM
5/16/2023	2:45 PM	Carlos Perez	9352 O'Day Drive		Other: See Notes	sm	Resident has about 15 bags of yard waste for pickup...Sean/Dylan will get them	Street	y	bkb		
5/17/2023	10:30 AM	Angela Grady	3527 42nd Street	317-431-7801	Sink Hole	sm	possible sink hole in parkway on the left side, resident said there is grass over it so you would have to walk on it to find it - please advise resident We havr no lines by the sinkholes, probably where tree were removed in the past. Advised reisdent.	WT/SW	Y	AK	5/19/23	11:51 AM
5/17/2023	11:07 AM	Patricia	8939 Prairie	(219) 838-3395	Sewer Backup	kw	Resident has plumbers out rodding sewer line. Plumbers are telling her that her and her neighbors line tie together and is possibly broken on the neighbors side. Aaron is sending Jimmy and Adam out there to check it out We advised resident on what she could do.	WT/SW	Y	AK	5/17/23	2:34 PM
5/17/2023	11:24 AM	Sharon Scasny	10010 Wildwood Lane	(219) 765-3191	Dead Tree/Status?	kw	Resident said the tree in the parkway is dead. Please check and advise resident tree is dying so we a few more when Brian has time they can go through the area	Tim	y			
5/17/2023	11:24 AM		2711 Wicker			kw	Has lawn bags out for pickup (leaves)...Dennis got them.	Street	y	bkb		
5/17/2023	1:08 PM		3126 Glenwood		Dead Tree/Status?	kw	He thinks the tree is dead. Please check and advise It is dead we will take it down. JEFF	Tim	y			
5/18/2023	9:30 AM	resident	2648 Wicker Avenue		Other: See Notes	sm	resident has bagged leaves to be picked up..Gave to Dennis	Street	y	bkb		
3/19/2023	10:20 AM	resident	2636 Duluth		Other: See Notes	sm	resident has bagged leaves for pickup (corner by Gordon)...Gave to Dennis	Street	y	bkb		
5/19/2023	2:00 PM	Mary Knight	2725 Clough	219-923-7828	Sidewalk/Curb Issue	sm	Resident would like information on the sidewalk replacement program..talked to resident.	Street	y	bkb		
5/19/2023	2:40 PM	Tim Moore	2415 River Drive	(219) 286-5839	Other: See Notes	sm	Resident said there is a big pile of branches on the hill of the dyke.. He wants to know if PW can come and pick it up. Please advise resident, he would like to be there when someone comes out to look at it	Street				
5/19/2023	2:40 PM	Philip Ignas	3336 George St	(219) 801-1229	Dead Tree/Status?	kw	Please check tree and let resident know tree is only 1/2 dead resident was told to call back if the status changes	Tim	y	tg		
5/23/2023	10:00 AM	resident	3508 Ridge & 3527 Ridge		Street Light Out	sm	street lights out at 3508 Ridge Road and 3527 Ridge Road.. Will look into it.	Street	y	bkb		
5/23/2023	11:20 AM	mike Larson	2305 99th Street	(219) 614-4578	Sink Hole	sm	resident said there is a large sinkhole next to the manhole cover We will check and repair this Friday.	WT/SW	Y	AK	5/23/23	2:37 PM
5/23/2023	11:20 AM	resident	3437 Laverne Drive		Leaves Pickup	sm	resident has bagged leaves to be picked up.. Dennis will get them.	Street	y	bkb		
5/23/2023	1:10 PM	Denise Mol	3328 Eder	(708) 912-3741	Other: See Notes	sm	Resident said she has standing water in her backyard and wants someone to come and check It's a leak. Repairing it now.	WT/SW	Y	AK	5/23/23	2:38 PM
5/23/2023	2:30 PM	resident	2651 Wicker Avenue		Leaves Pickup	sm	resident has bagged leaves for pickup...Gave to Dennis	Street	y	bkb		
5/23/2023	3:35 PM	Dillon James	3338 Laporte	(219) 781-7643	Water On/Off Req.	sm	Resident needs water shut off Thursday 5/25/23 at 11:00am because he is having plumbing work done I will give this to Kyle	WT/SW	Y	AK	5/24/23	6:13 AM
5/23/2023	8:30 AM	Desiree Biro	2925 Highway	(219) 513-9212	Other: See Notes	sm	One Dog at a Time said the garbage can in front of her shop is full and asked if someone can please come and empty it...Gave to Dennis	Street	y	bkb		
5/24/2023	1:20 PM	resident	3512 Franklin		Other: See Notes	sm	Resident has bagged yard waste for pickup..Sean/Tim will get them.	Street	y	bkb		
455/24/2023	2:10 PM	John Valiska	3325 Grand Blvd	(219) 923-7626	Restorations	kw	Had a water break here yesterday. He wants to know if it is fixed and how long to get the fence back up I called and left a message. We will be back when the ground settles, if he needs a temporary fence put up we will do that right away.	WT/SW	Y	AK	5/24/23	2:23 PM
5/24/2023	2:13 PM	resident	2636 Duluth		Leaves Pickup	sm	resident has bagged leaves for pickup at the corner of Duluth and Gordon...Sean/Tim will get them.	Street	y	bkb		
5/24/2023	12:40 PM	Vince Hudak	9330 Forrest	(219) 924-0738	Other: See Notes	sn	Resident has questions for Derek, he wants to know what is being done with the street in front of his house. Derek talked to resident and the issue is resolved	Street	y	Derek	5/24/23	12:40 PM
5/24/2023	1:45 PM	resident	2648 Wicker Avenue		Leaves Pickup	sm	resident has bagged leaves for pickup Friday 5/25...Added to the loader stops for today.	Street	y	bkb		
5/26/2023	11:56 AM	Maurene	3434 41st St	(219) 670-5077	Other: See Notes	kw	Resident will have yard waste bags our for pickup on Tuesday 5-30 Dennis should be getting these today.	Street	Y	AK	5/30/23	10:42 AM
5/26/2023	1:25 PM	Sadie Perez	3304 George Street	(708) 979-3420	Other: See Notes	sm	Resident said there is pallets and a bunch of other garbage in her alley and it has damaged her fence from leaning on it. She wants to know if we can remove it This may need to be put on the loader stop list for Friday.	Street	Y	AK	5/30/23	10:41 AM
5/26/2023	3:13 PM	David	3131 Highway	(219) 712-4546	Water On/Off Req.	kw	Resident has constant seepage through the wall and is asking for the water to be shut off until he can find the issue. It is being repaired today.	WT/SW	Y	AK	5/30/23	7:46 AM
5/26/2023	3:30 PM	Sandra Strickland	2019 Main Street	(219) 718-4175	Other: See Notes	sm	Resident wants someone to come and take all the weeds out of the ditch area. She wants to talk to Brian...Sent mowing crew to weed whack and spray om June 5th	Street	y	bkb		
5/30/2023	9:09 AM	Angela Grady	3527 42nd Street	(317) 431-7801	Sink Hole	kw	On 5-17 the sinkhole in the parkway was checked. At that time a sinkhole in the backyard was always checked and the resident was informed that the line would be televised. She wants to know if this has been done yet and if so, what were the findings. Please let the resident know. Scheduled to be done tomorrow. I will call her.	WT/SW	Y	AK	5/30/23	10:39 AM
5/30/2023	9:17 AM	Tom Rechlicz	2816 Duluth	(219) 923-5221	Other: See Notes	kw	Right side of the garage, in the alley, a truck (possibly garbage truck) is cutting the turn into the alley short and tearing up the grass. The mound is so high that resident is unable to mow. Can this be graded out and possibly stoned? I will also contact Republic to let them know they are possibly tearing it up We caoould, perhaps, pull out some of the grass and dirt and stone and compact the area. He doesn't care about the grass back there so we could put stone in where they turn. I will ask Brian when he gets back.	Street	Y	AK	5/31/23	9:27 AM

5/30/2023	9:10 AM	resident	5th and Ridge		Other: See Notes	sm	resident said there is glass and a tail light at 5th and Ridge and asked if someone can come and pick it up. Lou is going	Street	Y	AK	5/30/23	2:05 PM
5/30/2023	9:30 AM	Joe Lesniak	8508 Liable	(219) 838-7879	Sidewalk/Curb Issue	sm	Resident wants information on the sidewalk replacement program. (sidewalk is Laporte side) Please advise resident...Will do	Street	y	bkb		
5/30/2023	12:21 PM	Anthony Portone	3137 Strong St	(219) 746-1863	Locate Lines/B-box	kw	Needs bbox located for plumber to replace inside valve that is dripping. Kyle will check this out today.	WT/SW	Y	AK	5/30/23	2:15 PM
5/30/2023	12:30 PM	Antonio Gonzales	9625 5th Place	(815) 600-6873	Restorations	sm	Resident said his sidewalk was replaced and he wants to know when the restoration will be done. Please advise resident. Spoke with resident, the asphalt patching in front of the apron/curb is scheduled for this Thursday or Friday. The dirt and seed restoration is to be done by the contractor that he hired.	Street	Y	KW	5/31/23	10:09 AM
5/30/2023	1:50 PM	Ralph Scheeringa	3702 41st Lane	(219) 588-2247	Pot Hole	sm	Resident said there are 2 big potholes, Kleinman just south of the Cady Ditch and 41st and Kleinman. Resident wants a supervisor to call him back to tell him when this will be done I callled and left a message, I am going to try and get this done this week.	Street	Y	AK	5/30/23	2:35 PM
5/30/2023	1:55 PM	Katarina Sibova	8951 Lawndale	(219) 256-6783	Other: See Notes	sm	Resident said the tree in the parkway is damaging her lawn from roots and she had roots in the main line. She want someone to come and look at her tree because she thinks it is diseased. (She also called on 4/19/22 call log- tree is not dead) Please advise resident resident has been advised numerous times the trees are not dead	Tim	y	tg		
5/30/2023	2:25 PM	Phillip Ignas	3336 George Street	(219) 801-1229	Dead Tree/Status?	sm	Resident thinks his tree is dead in the parkway. Please advise resident after you check on Monday 6/5/23 tree tree is only 1/2 dead left a message on recorder again	Tim	y	tg		
5/31/2023	12:45 PM	Randy Hernandez - ATI	1st Street & Garfield	(219) 765-1025	Other: See Notes	sm	Ray said they are doing directional boring and another contractor is there doing something with water and the ground is caving in. He wants someone to come and check It has been dealt with.	WT/SW	Y	AK	6/1/23	7:24 AM
5/31/2023	1:30 PM	Michael Huetten	9216 O'Day Drive	(219) 712-8094	Dead Tree/Status?	sm	Resident said the tree in the parkway has a hole in it and believes it is dead. He is afraid the tree might fall down and wants someone to come and look at it. Please check and advise resident tree is dead I will have Dave remove	Tim	y	tg		
6/1/2023	10:00 AM	Charles Spoljoric	8417 Johnston	(219) 923-2908	Sink Hole	sm	Resident said the street in front of his driveway is sinking and wants someone to come and check. Please advise resident Jimmy is runningover there to check and make sure it isn't a sewer issue.	Street	Y	AK	6/1/23	10:23 AM
6/1/2023	10:45 AM	resident	3423 Martha		Other: See Notes	sm	Resident has bagged yard waste for pickup. Dennis will get these today	Street	Y	Ak	6/2/23	9:34 AM
6/1/2023	11:15 AM	Teresa Loden	8426 Parrish Ct	(219) 972-1881	Sidewalk/Curb Issue	sm	Resident wants information on the sidewalk replacement program. Please call her on Wednesday 6/7...Will do	Street	y	bkb		
6/1/2023	12:14 PM	Karen Christoffels	8938 Pettit	(760) 412-1806	Dead Tree/Status?	sm	Resident said the tree in the parkway by the lamp post is dead. Please check and advise resident. Called again today (originally on call log on 4/6/23) still waiting for a response I am going to have dave look at the tree to get another opinion it looks to me like there may be a split alternative phone number is 1-507-123-1258 Dave is going to cut the dead section out unless he finds rot then the tree will need to come down	Tim	y	tg		
6/1/2023	1:10 PM	Charles Kohler	3820 Sandalwood	(219) 433-0271	Sidewalk/Curb Issue	sm	Resident would like information on the sidewalk replacement program...Will do	Street	y	bkb		
6/2/2023	10:45 AM	Margaret Joyce	9951 Branton Avenue	(219) 924-8040	Sink Hole	sm	Resident thinks there is a sink hole in front of her house. She wants someone to come out to check and fix. Please advise resident Street is lifted, not a sinkhole. I believe this road is getting redone this year.	WT/SW	Y	Ak	6/2/23	1:21 PM
6/2/2023	12:50 PM	Monique Salmon	8348 Delaware	(708) 501-9719	Water Pressure	sm	Resident said her water pressure is low in all the faucets and wants someone to come and check They were shut off dur to non payment	WT/SW	Y	Ak	6/2/23	1:56 PM
6/5/2023	9:10 AM	Fred Lopez	10140 White Oak Lane	(773) 494-7124	Water Pressure	sm	Resident said he has no water pressure in his sprinkler system please check - bbox was turned off/ kyle turned it on	WT/SW				
6/5/2023	9:30 AM	Stacy Snyder	8125 Duluth Street	(219) 669-7336	Water Pressure	sm	Resident said she has low water pressure in the bathroom and wants us to check. Resident responsibility (screen needs to be cleaned)	WT/SW				
6/6/2023	11:49 AM		2734 Wicker Ave		Other: See Notes	kw	Resident has brown bags with leaves to pick up..Added to loader stop list.	Street	y	bkb		
6/6/2023	1:05 PM	Shah Reema	2124 Briarwood Lane	(219) 613-9897	Sink Hole	sm	Resident said there is a sink hole in the back yard by the drain. He wants someone to please check Basin needs mortar. We will take care of this later in the week.	WT/SW	Y	Ak	6/6/23	1:21 PM
6/6/2023	3:30 PM	Taylor - PPNW	8232 Kennedy Avenue	(219) 923-2812	Locate Lines/B-box	sm	Resident asked for the bbox to be located because she is had a plumber out. I spoke to them, box will be exposed and repaired early next week.	WT/SW	Y	AK	6/7/23	2:10 PM
6/8/2023	1:10 PM	resident	2647 Wicker Ave		Leaves Pickup	sm	resident has bagged leaves for pickup...Loader stop list	Street	y	bkb		
6/8/2023	1:25 PM	resident	2836 Laporte		Other: See Notes	sm	resident has bagged yard waste for pickup....Loader stop list.	Street	y	bkb		
6/12/2023	1:45 PM	Donald Johnson	8952 Grace	(219) 838-7530	Water Pressure	sm	Resident has low water pressure outside from the spicket and wants someone to come and check Water pressure is normal. Cursed out Jimmy and said he was getting a lawyer because we turned down the pressure in the main. There is nothing we can do for him.	WT/SW	Y	AK	6/13/23	6:35 AM
6/13/2023	1:20 PM	Jena Holguin	3120 97th Place	(219) 218-4457	Dead Tree/Status?	sm	Resident said the tree in the parkway(on the left) is dead and dropping big branches. She is afraid someone is going to get hurt. Please check and advise resident top half of tree is dead I will have Dave take it but resident has been advised	Tim	y	tg		
6/13/2023	2:30 PM	resident	8924 Woodward		Branches Missed	sm	Resident has branches to be picked up..Todays route,so they should have been picked up if they were out in time.	Street	y	bkb		
6/15/2023	9:10 AM	resident	3124 Laporte		Other: See Notes	sm	Resident said there is a huge divit in the alley where a water main break was. She wants to know if someone can come and fill it with rock. Done today 6/16/23	WT/SW	Y	AK	6/15/23	9:33 AM
6/16/2023	8:53 AM	resident	2852 Parkway Dr		Other: See Notes	kw	Resident has yard waste bags out for pick up....Dennis will get them	Street	y	bkb		
6/16/2023	10:30 AM	Joseph Marquez	9331 Waymond Avenue		Sidewalk/Curb Issue	sm	Resident would like information on the sidewalk replacement program	Street				
6/16/2023	2:30 PM	resident	9452 Saric Drive		Branches Missed	sm	branches missed on Thursday's route..We will get them this week	Street	y	bkb		
6/19/2023	9:00 AM	Steven Jacobsen	8335 5th Street	(219) 588-7274	Dead Tree/Status?	sm	resident thinks the tree might be dead and it is loosing bark. Please check and advise resident	Tim				
6/19/2023	9:07 AM	resident	3310 Garfield		Other: See Notes	sm	Resident has yard waste bags for pickup..Jeff will get them.	Street	y	bkb		
6/19/2023	9:20 AM	resident	3509 Maple Pl		Other: See Notes	kw	Resident has a yard waste bag with leaves in it...Jeff will get them.	Street	y	bkb		
6/19/2023	2:25 PM	resident	3520 Franklin		Branches Missed	sm	Resident said his branches were missed today..Gone	Street	y	bkb		
6/19/2023	2:55 PM	Alice Jimenez	3214 Glenwood	219-801-1950	Dead Tree/Status?	sm	Resident believes her tree in the parkway is dead. I t is rotted at the bottem and bark is falling off. Please advise resident left message tree is not dead	Tim	y	tg		
6/19/2023	3:10 PM	rWade - All Aspect Plumbing	3441 Condit	(708) 935-5490	Water On/Off Req.	sm	Wade is repairing a valve and needs the bbox turned off. Kyle is going there now	WT/SW				
6/20/2023	10:37 AM	Johnathon Arrebondo	3144 Eder St	(219) 730-4538	Dead Tree/Status?	kw	Resident believes tree is hollow/dead. Please check and advise. Also the neighbors trees by his driveway is lifting the sidewalk and causing lots of water to stand after a rain the tree is hollow I wil have Dave take it down	tim	y	tim		
6/20/2023	11:30 AM	resident	8348 5th Place		Branches Missed	sm	Resident said their branches were missed on Monday...Picked up	Street	y	bkb		
6/20/2023	12:15 PM	resident	3818 Sandalwood		Branches Missed	sm	Resident said her branches were missed on Monday...Picked up	Street	y	bkb		
6/20/2023	1:42 PM	resident	5th and Ridge Road		Other: See Notes	sm	Resident said there is glass on the sidewalk from an accident that happened about a month ago...Dennis & Brendan will look for it.	Street	y	bkb		
6/21/2023	2:45 PM	Linda Trevino	2635 Grand Blvd	(219) 801-1536	Other: See Notes	kw	Resident is saying when the tree was removed at 8244 Gordon Dr, it hit the side of her house causing damage to the siding. Nothing was reported by Dave's Tree Service. Gave to Tim to check out called at 1am on 6/22/23 left message for resident to call back so I can meet with her and look at damage	Tim				
6/22/2023	9:30 AM	resident	Glenwood between 5th & Parrish		Other: See Notes	sm	Resident said there is a lot of sand in the street from a water main break and asked if the street sweeper could can by....Lou will get it some time today.	Street	y	bkb		
6/22/2023	11:52 AM	resident	3505 42nd St		Branches Missed	kw	pickup day was yesterday and branches were missed...Tyler wil get them today.	Street	y	bkb		
6/23/2023	10:22 AM	Banasiak	Fence between pump st. and dog pound		Other: See Notes	kw	John is asking if the trees/bushes growing in the fence between the pump station and dog bound can be cut. Please and thank you..Give to Mikes Guys. Relayed to Mike 6/26/23 kw	Street	y	bkb		
6/26/2023	8:00 AM	resident	2636 Duluth		Leaves Pickup	sm	resident has bags of leaves for pick up (corner of Duluth and Gordon)...Gave to Dylan.	Street	y	bkb		
6/26/2023	8:00 AM	Charles Spoljoric	8417 Johnston	(219) 923-2908	Sink Hole	sm	Resident said the street in front of his driveway is sinking and wants someone to come and check. Please advise resident Jimmy is runningover there to check and make sure it isn't a sewer issue. This is originally from 6/1/23. Resident just called back asking what the findings were. Please let him know.	WT/SW				
6/26/2023	1:45 PM	Konnie Kuiper	8941 Kleinman		Other: See Notes	sm	FYI - Konnie has branches out for pick up on Wednesday	Street	y	bkb		
6/27/2023	10:16 AM	Resident	8737 Idlewild		Other: See Notes	kw	Has leaf bags out for pickup.....Gave to Dylan	Street	y	bkb		

6/27/2023	10:45 AM	Ashley Mccabe	9328 Spring St	(219) 808-5570	Mailbox damaged	kw	Mailbox damaged by plow this past winter. Owner called and we fixed it but she is saying it wasn't fixed correctly and is low to the ground and leaning. Please check and let her know....Jeff will look at it, but sounds suspicious.	Street	y	bkb		
6/28/2023	8:20 AM	resident	2613 - 2615 Lincoln		Other: See Notes	sm	Resident has a huge amount of branches and logs in the parkway from the storm for pick up..Tuesday's Route	Street	y	bkb		
6/28/2023	10:20 AM	Brad - Price Point Buliders	8327 Grace	(219) 512-3241	Other: See Notes	sm	Brad wants to know the sanitary sewer line depth at 8327 Grand for a new build. Bruce 219-746-4336 is another contact	WT/SW				
8/28/2023	10:50 AM	Scott Buuck	3127 Maple	(219) 689-3375	Dead Tree/Status?	sm	Resident believes the tree in the parkway id dead. Please check and advise resident tree has 2 dead limb I will have Jeff take it down	Tim	y	tg		
6/28/2023	1:55 PM	resident	3630 Sandalwood		Branches Missed	sm	branches missed on Monday's route..Brendan will get them sometime Thursday.	Street	y	bkb		
6/28/2023	2:05 PM	resident	9406 Wildwood Drive		Loader Stop	sm	resident has stumps to be picked up..Will add to the loader list.	Street	y	bkb		
6/29/2023	10:50 AM	resident	8735 Liable Road		Pot Hole	sm	resident has pot holes in front of her house and asked if they can be repaired...Gave to Sean	Street	y	bkb		
7/5/2023	9:45 AM	resident	9307 Kleinman		Other: See Notes	sm	Resident has yard waste bags out for pick up Dennis will pick these up today	Street	Y	AK	7/6/23	10:06 AM
7/5/2023	10:50 AM	Marty Jacobs	9327 O'Day Drive	(219) 545-9525	Dead Tree/Status?	sm	Resident believes the tree in the parkway id dead. Big branches are falling off the tree (neighbor reported the tree, no info for reident) Please check and advise resident tree is dead we will remove it the address is 9333 O'Day drive resident who lives there has been advised	Tim	y	tg		
7/5/2023	1:50 PM	resident	9452 Saric Drive		Branches Missed	sm	Resident has branches for pick up, she said that they were missed last week Thursday and she just wants to make sure the branches get picked up. Gave to chipper	Street	Y	AK	7/6/23	10:05 AM
7/5/2023	3:25 PM	resident	2437 Walnut		Branches Missed	sm	Resident has branches that were missed for Tuesday's pick up Gave to Brendan	Street	Y	AK	7/6/23	10:05 AM
7/6/2023	9:20 AM	Frank	3331 42nd Street	(219) 805-0766	Drainage Issues	sm	Resident said the drain across the street don't drain properly, it takes about 5 hours to drain. Please check Jimmy and Adam jetted this and spoke to the resident	WT/SW	Y	AK	7/6/23	10:04 AM
7/6/2023	9:25 AM	Nola	3433 Martha	(219) 924-8082	Other: See Notes	sm	Resident has a big branch hanging from the tree in the parkway (storm) please check Jeff got this today	Street	Y	AK	7/6/23	10:07 AM
7/6/2023	11:45 AM	Lorelei Gomez	3527 44th Place	(773) 307-4187	Dead Tree/Status?	sm	Resident believes the 2 trees in the parkway are dead. A couple of big branches fell down and they are afraid someone is going to get hurt. Please check and advise resident the tree closest to drkeway is bad and I will have Dave remove it resident has been advised	Tim	y	tg		
7/7/2023	1:45 PM	Rada Rapaich	3051 Garfield	(219) 308-0375	Sidewalk/Curb Issue	sm	Resident called because the sidewalk (corner house-Delaware side) is raised and people walking are tripping over it. I told her there is a sidewalk replacement program but she said that the town should be responsible for fixing it. Please call Rada Monday between 12:00 - 1:00 (lunchtime)..Spoke to resident.	Street	y	bkb		
7/7/2023	1:45 PM	resident	9000 Cline Avenue		Other: See Notes	sm	resident has branches out for pickup....This is Forrest Park Plaza, to my understanding they do not pay for trash/Sanitation services thru the town so we will not pick this up, they must do it themselves or hiring a contractor.	Street	y	bkb		
7/10/2023	9:00 AM	resident	8735 Liable Road		Pot Hole	sm	Resident said a crew was out this morning and filled some pot holes but left a large one. She wants to know if the crew is coming back out to fill..All holes were filled.	Street	y	bkb		
7/10/2023	10:00 AM	resident	2305 99th Street		Sink Hole	sm	resident said there is a large sinkhole next to the manhole cover Please check We will put some dirt and seed by the manhole. It was already repaired, it just settled a little bit. I called and spoke to her.	WT/SW	Y	AK	7/12/23	12:24 PM
7/10/2023	11:50 AM	Peter Terry	2129 Bluebird Ln	(219) 789-3910	Dead Tree/Status?	kw	Had a large branch fall from the storm and noticed the tree looks hollow. Please see if the tree is dead and let him know.the tree on corner of sidewild and Bluebird is bad and Dave will remove it resident has been advised	Tim	y	tg		
7/10/2023	1:10 PM	Delores Tegtman	3523 43rd Street	(219) 924-1350	Sink Hole	sm	Resident said there is a sink hole by the sewer in front of her house Not a sewer issue, this just needs cold patch	WT/SW	Y	AK	7/10/23	2:27 PM
7/10/2023	3:15 PM	Javier Miranda	8546 5th Street	(219) 381-5793	Dead Tree/Status?	sm	Resident believes the tree in the parkway is dead Please check and advise resident	Tim				
7/11/2023	1:24 PM	Randy Frets	3324 Ridge Road	(219) 746-9930	Pot Hole	sm	Resident said there are several pot holes in the alley and asked if it can be fixed...will add to the list.	Street	y	bkb		
7/12/2023	9:50 AM	Bob Baxter	2944 Lincoln Street	(217) 357-5717	Sidewalk/Curb Issue	sm	Resident would like information on the sidewalk replacement program. He asked if you can call him before Friday because he is going out of town...Talked to Resident	Street	y	bkb		
12-Jul	3:48 PM	resident	3434 41st St		Water Break	kw	Residents son called and said the sump pump is running non stop. He has a plumber enroute and thinks the line might be broke between the bbox and the home. Trey is going over to shut off the water at the bbox	WT/SW				
12-Jul	11:10 AM	Diane Kerr	3237 Condit	(219) 869-8568	Dead Tree/Status?	sm	Resident said the tree is dead in the parkway. Please check and advise resident tree's are fine left a message	Tim	y	tg		
7/12/2023	11:25 AM	Katherine Schuldt	3544 41st street	(219) 743-3364	Sidewalk/Curb Issue	sm	Resident would like information on the sidewalk replacement program..Will do.	Street	y	bkb		
7/12/2023	3:45 PM	Lenore Smith	9415 Kennedy Avenue	(219) 427-8701	Sink Hole	sm	Resident said there is a sink hole next to the drain on Kennedy in front of her house..Sent Grant & Adam, they didn't find an issue.	WT/SW	y	bkb		
7/13/2023	5:30 PM	Louise Volpi	9546 Manor Dr	(219) 922-6069	Sewer Backup	kw	Resident left a voicemail about water coming up in her basement floor drain. Contacted Adam to go check the storm main. Our side is clear. Resident was instructed to call a plumber	WT/SW	y	kw		
7/14/2023	1:05 PM	resident	2726 Wicker Ave		Leaves Pickup	sm	resident has bagged leaves for pickup...Gave to Dennis	Street	y	bkb		
7/14/2023	1:10 PM	Mike Larson	2305 99th Street	(219) 614-4578	Sink Hole	sm	Resident said there is a sink hole in the front can you please check - Please advise resident..See line 282	WT/SW	y	bkb		
7/14/2023	1:20 PM	Paul Kobus	9415 Spring Street	(219) 895-0001	Sink Hole	sm	Resident said the sewer in front of his house is caving in. Please check and advise resident....Jimmy Checked, all is good.	WT/SW	y	bkb		
7/17/2023	9:30 AM	resident	main street to Indianapolis		Other: See Notes	sm	resident asked if the lines can be re-painted..Yes they can.	Street	y	bkb		
7/17/2023	1:30 PM	Susan Hageman	2950 Garfield	(219) 614-6147	Tree/Branch Issues	sm	Resident said that the garbage trucks are hitting the branches on the trees in the parkway and some are breaking and falling. Please check and advise resident.... Didn't see anything out of the normal, no different than any other street with trees.	Street	y	bkb		
7/17/2023	1:40 PM	William Cochran	10015 Delaware	(219) 781-7609	Dead Tree/Status?	sm	Resident believes the tree in the parkway is dead. Please check and advise resident tree is bad we will remove	Tim	y	tg		
7/18/2023	10:34 AM	Jack Giessen	8946 Highland St	(248) 761-3881	Sink Hole	kw	There is a sinkhole in the parkway. A storm drain is at the curb line by the sink hole. Please check and let resident know what is going on. Jimmy and Adam checked this out and spoke to the resident. Not an issue.	WT/SW	Y	AK	7/18/23	2:22 PM
7/18/2023	11:20 AM	resident	9000 Cline Avenue		Branches Missed	sm	Resident said branches were missed last week.....This is Forrest Park Plaza which does not pay for Garbage/Sanitation fees,per Mark/Kim we will not pick these up they must do it themselves or hire someone.	Street	y	bkb		
7/18/2023	1:45 PM	Michael Parker	9331 Wildwood	(773) 964-6126	Other: See Notes	sm	Resident is wanting to know if you have any trees that can be planted in his parkway. Please advise left message to call back in fall	Tim	y	tg		
7/18/2023	3:15 PM	resident	3512 Franklin		Other: See Notes	sm	Resident has 5 bags of yard waste for pickup..Gave to Dennis	Street	y	bkb		
7/20/2023	9:50 AM	Joseph Ballentine	3103 44th street	(312) 383-7181	Sidewalk/Curb Issue	sm	Resident would like information on the sidewalk replacement program..OK	Street	y	bkb		
7/20/2023	9:50 AM	Neighbor of -->	3147 Grand Blvd (Parrish side)		Pot Hole	kw	The neighbor came in reporting a large pothole in the street in front of the drive apron at this location....Gave to Sean/Tim	Street	y	bkb		
7/20/2023	1:35 PM	Cindy Wopinski	8213 Grace Place	(219) 741-5457	Sidewalk/Curb Issue	sm	Resident has questions about her uneven sidewalk - sidewalk replacement program...OK	Street	y	bkb		
7/20/2023	3:05 PM	Bob O"Donnell	9807 Prairie	(219) 877-5050	Tree/Branch Issues	sm	Resident said there is a tree in the easement that is leaning on his fence. He wants someone to come out and look at it	Tim	y	tg		
7/21/2023	10:40 AM	Victor Cruz	9229 Southmoor	(219) 577-7608	Pot Hole	sm	Resident said he has 5 pot holes in front of his house and asked if they can be fixed...Gave to Sean/Tim	Street	y	bkb		
7/24/2023	9:25 AM	Jennifer Dykstra	2840 44th St	(708) 351-9757	Sewer Backup	kw	Resident has water coming up in the crawl space drain. Called Jimmy to check the storm main. Main is clear, problem is on resident's side. Resident was home and advised of the findings	WT/SW	y	kw		
7/24/2023	9:27 AM	Deena Frye	3509 Maple Pl		Branches Missed	kw	Resident is on a keyhole and has had branches out for a couple weeks and they keep getting missed. Today is her pickup day ..... Gave to Tyler	Street	y	bkb		
7/24/2023	10:30 AM	Josh Adducci	3131 Wirth Road	(219) 678-0786	Dead Tree/Status?	sm	Resident believes the tree in the parkway is dead. Please check and advise resident spoke with resident	Tim	y	tg	7/27/23	
7/25/2023	9:27 AM		9034 Cottage Grove Pl		Water Break	kw	Crews are working a water break at this location Work has been completed	WT/SW	Y	AK	7/26/23	6:06 AM
7/27/2023	7:30 AM	Manuel Ramos	3042 Eder Street	(219) 315-6715	Water Break	sm	Resident said water is coming up in the backyard at the neighbor's house directly behind him (3039 Grand Blvd) Water main break, crew is reapiring it now.	WT/SW	Y	AK	7/27/23	9:03 AM
7/27/2023	12:56 PM	Mark Orlick	2235 Oakdale	(708) 254-5535	Other: See Notes	kw	He said the sidewalk is sinking by the edge of the driveway and the sidewalk. Looks like maybe a water line runs through there. No standing water has been noted but he did say he has only been there 4 years and it looks like that area has been patched before Not a water line or sewer issue.	WT/SW	Y	AK	7/28/23	10:49 AM
7/28/2023	8:15 AM	resident	8950 Soutnmooor		Tree/Branch Issues	sm	Tree fell down near the ditch from the storm Jeffery and crew handled it.	Street	Y	AK	7/28/23	10:51 AM

7/28/2023	10:26 AM	Jamie Cascanedo	3120 Franklin St	708-979-1461	Dead Tree/Status?	kw	A branch from the parkway tree fell on his car, he believes the tree is dead and needs removed. Let him know almost bad enough i will keep an eye on it	Tim				
7/28/2023	3:10 PM	Walter Lamont	10042 Prairie Circle	(219) 512-6734	Other: See Notes	sm	Resident said the storm sewer is washing away around the side, about 2ft deep...Gave to Chris/Dave to fix.	WT/SW	y	bkb		
7/31/2023	8:14 AM	Eric Pabey	3128 44th St	(219) 595-0880	Dead Tree/Status?	kw	Resident had a large branch come down and wants the trees checked to see if they are dead. He had a large branch a couple of years ago that damaged his roof and gutters tree s are fine no answer at door and phone number is not good	Tim	y	tg		
7/31/2023	8:26 AM	Robert Albrecht	3526 44th Pl	(219) 924-0575	Dead Tree/Status?	kw	Resident has a tree in the parkway that he believes is dead, please check and let him knowtree is dead sean will take it down	Tim	y	tg		
7/31/2023	12:35 PM	Linda Manly	3107 98th St	(847) 489-7411	Other: See Notes	kw	Resident had a water main break over the winter and her Rasberry plants were removed. Will these be replaced? You should have pictures of what was removed. I spoke with her, we will bring her some plants when the weather cools off per her request.	WT/SW	Y	AK	8/2/23	11:36 AM
6/26/2023	8:00 AM	Charles Spoljoric	8417 Johnston	(219) 923-2908	Sink Hole	sm	Resident said the street in front of his driveway is sinking and wants someone to come and check. Please advise resident Jimmy is runningover there to check and make sure it isn't a sewer issue. Not a sewer issue. Asphalt is crumbling. I called and left a message, I will ask brian if we can possibly patch this sometime in the near future.	WT/SW	Y	AK	8/1/23	1:01 PM
7/31/2023	3:00 PM	Diane Satterfie	3013 100th St	(219) 688-6203	Other: See Notes	kw	Her neighbor had a large tree come down and we took care of it today. When she returned back home, her parkway is all torn up from tires. Did we do this? Are we restoring it?..Yes we wil restore...probably later this week or next week.	Street	y	bkb		
7/31/2023	3:42 PM		3147 Garfield		Branches Missed	kw	Had branches out for pickup (put out a couple days ago), they were missed....Lots of branches out from the recent storm, we will get them as soon as we can.	Street	y	bkb		
7/31/2023	3:49 PM	Rachel	8940 Cottage Grove Pl	(219) 741-0640	Tree/Branch Issues	kw	Chunks of tree down in the parkway and front yard (parkway tree). Sidewalk blocked...Working on cleaning up all storm debris thru out town, we will get there as soon as we can.	Street	y	bkb		
8/1/2023	9:05 AM	Sandy Burgans	2914 Clough Avenue	(219) 741-8821	Sidewalk/Curb Issue	sm	Resident said the curb and street are all cracked up in front of her house. She asked if someonr can come and look at it. Please advise resident. Resident's husband does concrete for a living so she is just wanting us to pull the old. Please contact her.	Street				
8/1/2023	11:44 AM	John Smolar	9332 Ellen St	(219) 741-8103	Sidewalk/Curb Issue	kw	Wants a quote for apron and sidewalk replacement. They will be home today..Ok	Street	y	bkb		
8/1/2023	3:10 PM	Kyle Behary	2121 41st Place	(219) 776-6120	Other: See Notes	sm	Resident hit the bbox with machinery. Kyle said they are going to replace the bbox because it is damaged It will be replaced late this week or early next.	WT/SW	Y	AK	8/2/23	6:15 AM
8/1/2023	4:06 PM	Donna McGowan	9414 Spring	(219) 922-0017	Other: See Notes	kw	Someone trimmed the ditch area by her today and left the clippings in the water. The water in the ditch is not flowing well because of this. Not sure who cut but I did call and leave a message with BJ. Please check first thing in the am and let me know. I told her I would call her back tomorrow..We don't cut anything on Spring Street....Talked to B.J. Zandstra and he will check on it.	Street	y	bkb		
8/2/2023	2:20 PM	Brendan Hartzog	3009 100th Street	(414) 403-5661	Tree/Branch Issues	sm	resident said the tree in the parkway has a big branch that is hanging from the storm and is afraid it might fall and hit something..We wil take a look at it.	Street	y	bkb		
8/3/2023	11:20 AM	Crystal Wyma	9021 Ohio Place	(708) 473-3995	Tree/Branch Issues	sm	Resident said the tree in the parkway (on the left side) is dead. Please check and advise residentsean will take it down resident has been advised	Tim	y	tg		
8/3/2023	2:25 PM	resident	8931 Waymond Avenue		Leaves Pickup	sm	resident has bagged leaves for pickup.Ok	Street	y	bkb		
8/7/2023	12:03 PM	Carol Stanley	3339 George St	(219) 771-0346	Tree/Branch Issues	kw	Believes at least 1 of the 2 trees in the parkway are dead. Please check and let her know. This is the 2nd time she has requested this and no one has gotten back to her.tree is dead dave will take it down resident has been advised	Tim	y	tg		
8/8/2023	2:30 PM	resident	9600 block of Erie		Other: See Notes	sm	resident asked if the street sweeper could come down the street because there is a bunch of tree debis in the road..So do a lot of other streets, hes working his way thru town as fast as he can.	Street	y	bkb		
8/8/2023	3:20 PM	Anupama Sharma	2138 Terrace	(219) 793-5007	Water Pressure	sm	Resident said there water pressure is low in all the faucets. Kyle is going there Wednesday 8/9 at 8:15am Inside filtration filter is clogged. Kyle bypassed it and pressure was fine. Kyle instructed resident to call someone out to service the filtration system	WT/SW	y	kw	8/9/23	9:25 AM
8/9/2023	9:27 AM	Krosalck	9615 Farmer Dr	(219) 769-6420	Other: See Notes	kw	Wants someone to pick up debris on the bike path side of her fence. Giving info to Trever	Street	y	kw		
8/10/2023	8:10 AM	resident	corner of 41st st & Erie		Other: See Notes	sm	resident walking by said water is coming up from the ground, he doesn't think anyone lives there (brown house) There is a sump pump discharge at the side of the house which runs onto the sidewalk. I will bring them ordinance info in a little bit.	WT/SW	Y	Ak	8/10/23	10:45 AM
8/10/2023	9:02 AM	Robert Hastings	9234 Prairie Ave	(219) 838-6743	Pot Hole	kw	Resident is requesting pot holes to be filled in the street in front of his driveway. Added to the list.	Street	y	bkb		
8/14/2023	9:40 AM	Fred Salmon	3224 Garfield	(219) 923-9006	Dead Tree/Status?	kw	Resident believes the tree in the parkway is dead. Please check and advise resident tree is bad sean will cut it	Tim	y			
8/14/2023	10:00 AM	resident	9224 Southmoor		Branches Missed	sm	These are not branches, but a pile of yard waste with some small twigs mixed in. I have a picture of it.	Street	y	bkb		
8/14/2023	10:35 AM	resident	3512 Franklin Street		Other: See Notes	sm	Resident has 5 bags of yard waste for pickup...Gave to Dennis	Street	y	bkb		
8/14/2023	11:15 AM	Adam Cabrales	3019 99th Place	(708) 504-0544	Dead Tree/Status?	sm	Resident believes the tree in the parkway is dead. Please check and advise resident tree is bad sean will cut it	Tim	y			
8/14/2023	11:20 AM	Caitlyn McDonald	3121 Franklin	(219) 433-6216	Dead Tree/Status?	sm	Resident believes the trees in the parkway is dead. Please check and advise resident tree is not dead resident has been advised	Tim	y	tg	8/22/23	
8/14/2023	3:00 PM	Paul Sullivan	2704 Eder	(219) 313-7330	Dead Tree/Status?	sm	Resident thinks the tree is dead. Branches keep falling off and he is afraid someone is going to get hurt. Please check and advise resident tree is dead sean will cut it	Tim	y			
8/15/2023	3:05 PM	George Malachuk	8002 Sycamore	(815) 727-7716	Sewer Backup	sm	Resident had gurgling in his sewer lines (toilet) and water is coming out of the manhole in front of his house in the middle of the street. Geary, Kyle, Trey (Jimmy called back in) jetting lines. Main sewer line is full from pump station to at least 6 manholes. Resident is asking about being reimbursed for having a plumber come out for his lines	WT/SW	kw			
8/15/2023	3:20 PM	resident	2928 Parkway		Branches Missed	sm	resident has branches for pickup...Ok	Street	y	bkb		
8/15/2023	3:20 PM	resident	3139 Eder Street		Loader Stop	sm	resident has logs for pickup...On Loader Stop List	Street	y	bkb		
8/15/2023	3:40 PM	resident	8925 Orchard		Branches Missed	sm	resident has branches out for pickup, he said they were missed last week...Ok	Street	y	bkb		
8/16/2023	12:00 PM	Kimberly Grezetic	3523 44th Place	(219) 333-9620	Dead Tree/Status?	sm	tree is not bad enough to come down i will recheck it in a week	Tim	y			
8/16/2023	3:30 PM	Adam Hernandez	3236 Martha Street	(219) 677-0800	Dead Tree/Status?	sm	tree on Highland Pl. side is bad sean will cut it	Tim	y			
8/16/2023	3:30 PM	resident	Main Street at the Target entrance		Dead Animal	sm	dead racoon on Main Street at the entrance to Target . Gave to Jeff	Street	y	bkb		
8/17/2023	1:00 PM	resident	8727 Cottage Grove Avenue		Other: See Notes	sm	Resident has bagged yard waste for pickup in the parkway and in the back....Gave to Jeff	Street	y	bkb		
8/17/2023	2:15 PM	Pamela Hart	8950 Southmoor	(219) 670-9323	Tree/Branch Issues	sm	Resident has a tree by the ditch that is hanging over her deck and she would like someone to come out and look at it to see if we can do anything. Please check and advise resident tree is on ditch side of parkway resident has been given number to Lake County Drainage	Tim	y	tg		
8/18/2023	1:58 PM	Robert O'Donnell	9807 Parkway Dr	(219) 877-5050	Other: See Notes	kw	The grass restoration that was done from replacing the leaking valve is nothing but weeds. Please reseed Also look at the evergreen tree up in the yard and see if there is anyway to save it. Resident feels it has been oversaturated because of the leaking valve for the last couple of years We aere going to dirt and reseed the area. I have talked to him about the tree already several times and told him we are not doing anything with it. It was not "oversaturated", it just isn't healthy. Resident said he was going to hire an arborist to look at it.	WT/SW	Y	AK	8/21/23	6:18 AM
8/18/2023	3:18 PM	Julie Childers	3538 41st St	(219) 588-5554	Sidewalk/Curb Issue	kw	Resident wants a quote for replacing 2 squares of sidewalk	Street				
8/21/2023	8:00 AM	Joe Lavin	3330 Garfield	(630) 886-5543	Tree/Branch Issues	sm	Resident believes the tree in the parkway is dead. Please check and advise resident tree is not bad enough to come down resident has been advised	Tim	y	tg	8/22/23	
8/21/2023	8:05 AM	resident	9205 Woodward		Branches Missed	sm	Resident said his branches were missed Friday I will give all three of these to the chipping crew for tomorrow.	Street	Y	AK	8/21/23	2:02 PM
8/21/2023	8:50 AM	resident	2103 Main Street		Branches Missed	sm	Resident said his branches were missed Friday	Street				
8/21/2023	9:00 AM	resident	9224 Southmoor		Branches Missed	sm	Resident said his branches were missed Friday	Street				
8/21/2023	9:30 AM	resident	Main Street		Pot Hole	sm	Resident said there are 2 big pot holes when you turn left from Indianapolis Blvd on Main Street	Street				
8/21/2023	12:18 PM	Vernon	2900 43rd St		Locate Lines/B-box	kw	Locate bbox and make sure it works sometime this week. He has to have some inside work done. Please call him and let him know if everything is ok. Joe could not get this off. Sending Kyle to double check it. If it is broken it will be scheduled for next week to be repaired.	WT/SW	Y	AK	8/21/23	2:00 PM
8/22/2023	7:30 AM	resident	9320 Idlewild		Branches Missed	sm	resident said his branches were missed Gave the addresss to Dylan.	Street	Y	AK	8/22/23	9:12 AM

8/22/2023	8:15 AM	Migdalia McCall	2123 Bluebird	(219) 677-4101	Dead Tree/Status?	sm	Resident believes both trees in the parkway are dead. Please check and advise resident left message that we cant take them down because they are not dead	Tim	y	tg	8/28/23	
8/22/2023	10:30 AM	resident	2253 99th Street		Other: See Notes	sm	Resident has yard waste for pick up Dennis will get these today	Street	Y	AK	8/22/23	10:51 AM
8/23/2023	11:10 AM	Chris Conces	3620 Ridge Rd	219-588-3023	Other: See Notes	drs	Resident found 1/2" copper line underneath broken mailbox. Before replacing mailbox, he wants Town to see if it is his service line or an abandoned line. Kyle will trace line and look for old b-box, if there. Could be a sprinkler line or an old mailbox support. Derek will call him back	WT/SW	y	drs	8/23/23	11:20 AM
8/23/2023	11:48 AM	Resident	2931 Ross St.		Tree/Branch Issues	BMB	Resident has a broken branch that is hanging over his driveway from storm damage and was wondering if we could cut the branch off. Tree orginates in the parkway. Sent Sean over there to check it. Sean cut it down.	Street	y	BMB	8/23/23	1:41 PM
8/23/2023	3:45 PM	Jamika Bouler	8136 Grace Place	708-275-5588	Water Meter	drs	Resident reported that someone turned on her outside faucet sometime after 6pm yesterday and it ran all day, soaking her yard. Wondered if there was something Town can do. Told resident that water that runs through the meter is billed, no exceptions. We can check the meter reading and give her a call back tomorrow with what to expect. She was ok with that and looks forward to a callback. A history was pulled today (8/24/23) she used 2k gallons of water with the hose running but she is on summer rates for sewage. Called her and explained this to her. All is well (kw)	WT/SW	y	kw	8/24/23	12:00 PM
8/24/2023	8:32 AM	Elizabeth Linn	2928 Parkway	(219) 677-2002	Dead Tree/Status?	kw	Check status of tree. Dead branches falling with ever storm and roots causing issues with sidewalk that she has already paid to be replaced. If it is not dead, please leave an application for removal and Dave's contact info with her spoke with resident and will drop off tree removal form on 8/30/23	Tim	y	tg	8/29/23	
8/25/2023	9:17 AM	Cathy Schuldt	3544 41st street	(219) 743-3364	Sidewalk/Curb Issue	kw	Resident is participating in the sidewalk replacement program. She has a few questins before they start. She called because she sees the locates but wants to know when and how long. She is also concerned that we will pull the sidewalk without letting her know and her car might still be in the garage ;) She would like you to call her please..Talked to resident.	Street	y	bkb		
8/25/2023	1:05 PM	Ron Jackowski	3105 Strong	(219) 838-1816	Dead Tree/Status?	kw	Resident believes the Silver Maple in the parkway is dead. Please check and let him know PHONE IS DISCONNECTED,made contact with homeowner jeff will take down	Tim	y	tg	8/29/23	
8/28/2023	9:00 AM	resident	9505 Erie Street		Other: See Notes	sm	Resident has yard waste for pick up..Gave to Dennis	Street	y	bkb		
8/28/2023	10:50 AM	Brian Reule	9244 Cottage Grove Place	(708) 675-9508	Dead Tree/Status?	sm	Resident believes the tree in the parkway is dead. Big branches keep falling off. Please check and advise resident tree is missing the center trunk and is a tree that has caused us problems in the storm sewer so Dave will remove it left message	Tim	y			
8/28/2023	12:24 PM	Paul Kyriakides	3616 41st Ln (3612 41st Lane)	(219) 616-8186	Sink Hole	kw	Resident believes there is a sinkhole in both his parkway and the neighbors. It is possibly from a nipsco line that was repaired 4 or 5 years ago. Don't know if any water or sewer lines are in there. Please call him before checking, he would like to point out exactly what he is talking about We checked the storm line that runs through there and found no issues.	WT/SW	Y	AK	8/29/23	2:03 PM
8/28/2023	12:59 PM		2010 White Oak Ln		Other: See Notes	kw	Has 4 bags of yard waste for pickup..Gave to Dennis	Street	y	bkb		
8/29/2023	11:07 AM	Pat Aerts	2130 Bluebird	(219) 289-9908	Other: See Notes	sm	Resident said his sidewalk has sunk about 2 1/2 inches in 4 months. He thinks there might be a leak by the bbox. Please check and advise resident There is no sewer line under the walk here. No leak. The most likely culprit is the trees in the parkway.	WT/SW	Y	AK	8/29/23	2:05 PM
8/29/2023	3:10 PM	Wally Krieger	10042 Prairie Circle	(312) 504-7292	Sidewalk/Curb Issue	sm	Resident would like information on the sidewalk replacement program	Street				
8/29/2023	3:15 PM	resident	corner of Zandatra & Prairie		Dead Tree/Status?	SM	Resident said there is a dead tree at the corner of Zandstra Ct and Prairie (pine tree) I believe it's a park dept tree I will tell trevor	Tim	y			
8/29/2023	3:40 PM	Mark Madison	3322 Grand Blvd	(219) 798-2934	Dead Tree/Status?	sm	Resident believes both trees in the parkway are dead. Please check and advise resident left message that we cant take them down because they are not dead	Tim				
8/30/2023	3:00 PM		8926 Indianapolis Blvd		Other: See Notes	sm	resident has branches for pickup...This a business, I believe Dunhill Tuxedos., but I will check it out.	Street	y	bkb		
8/31/2023	2:00 PM	resident	3132 97th Place		Branches Missed	sm	resident said his branches were missed today .....Gave to Brendan	Street	y	bkb		
9/1/2023	10:30 AM	Ashley Anderson	8051 North Drive	(219) 840-8521	Tree/Branch Issues	sm	Resident said everytime a big truck goes by it hits the branches and pull them off. She wants someone to come and look at it. Resident was advised we do not do tree trimming	Tim	y	tg	9/1/23	
9/1/2023	11:00 AM	Carol Wagner	9434 Forrest		Branches Missed	sm	Resdident said branches were missed Thursday for pickup, also the neighbor has branches out..Brendan will try and get them by the end of today.	Street	y	bkb		
9/1/2023	1:50 PM	resident	3133 Lincoln Street		Loader Stop	sm	Resident has a bush for pickup. Will add to the loader stop list for Friday	Street	y	bkb		
9/5/2023	8:30 AM	resident	8929 Southmoor		Other: See Notes	sm	Resident has 11 bags of yard waste and a stump for pickup...Dylan/Brendan will get the bags, will add stump to loader list.	Street	y	bkb		
9/5/2023	10:48 AM	Noreen	2643 Duluth St.	(219) 923-4887	Sewer Backup	kw	Resident has had sewage backup since late last week. Aaron is sending someone to check the main and will advise resident of the findings Our sewers are running very well. Resident was advised to contact a plumber to clean out her line.	WT/SW	Y	AK	9/5/23	1:03 PM
9/5/2023	11:07 AM	Pat Aerts	2130 Bluebird	(219) 289-9908	Other: See Notes	sm	Resident said his sidewalk has sunk about 2 1/2 inches in 4 months. He thinks there might be a leak by the bbox. Please check and advise resident There is no sewer line under the walk here. No leak. The most likely culprit is the trees in the parkway. Originally from 8/29/23, called again today saying plumbers have told him there is a possible leak in the water service line causing the sidewalk to sink. Call Pat at work (219) 933-4444 to let him know what is going on. Resident has been informed that there is no leak and that the tree roots are most likely the cause of his sidewalk woes.	WT/SW	Y	AK	9/5/23	12:55 PM
9/6/2023	10:59 AM	Darryl	2727 Martha St	(219) 765-8918	Sink Hole	kw	Across from this address, along the curb, there is a sink hole. Mark checked it and believes it is where the water service line was bored from the Martha St. project. This needs compacted backfill on the south side of curb in the grass and the north side of the curb needs cold patch. We filled the void in the road and the parkway. Looks like it was from a nipsco gas line repair. We will keep an eye on it, if it doesn't sink any more, we will patch the spot later.	WT/SW	Y	AK	9/7/23	8:22 AM
9/6/2023	12:30 PM	Kyle Geffert	9301 Kennedy Avenue		Street Light Out	sm	Street light out at 9301 Kennedy Avenue..ok	Street	y	bkb		
9/7/2023	3:30 PM	resident	9123 Kleinman		Loader Stop	sm	resident has logs for pickup On the loader stop list for today.	Street	Y	AK	9/8/23	7:49 AM
9/7/2023	3:30 AM	Margreta Harkenrider	3221 O'Day Drive	(708) 879-6295	Dead Tree/Status?	sm	Resident has 3 trees in the parkway that they believe are dead. Please check and advise resident left message that right now we can take the one really bad one out and others possibly in spring	Tim	y	tg		
9/8/2023	8:40 AM	resident	8927 Cottage Grove Place		Drainage Issues	sm	Resident said the drain on the south side of the parking lot at Faith Church is clogged Jimmy checked this	WT/SW	Y	AK	9/8/23	11:05 AM
9/8/2023	12:54 PM	Carolyn	3634 43rd St	(219) 922-1923	Water On/Off Req.	kw	Needs bbox off at 9 am, Thursday, September 14, 2023 for plumber to repair inside valve. Will call back when job is complete for water back on Kyle has this now and will handle it.	WT/SW	Y	AK	9/11/23	12:00 PM
11-Sep	10:25 AM	Cathy Leicht	3035 Strong Street	(219) 798-2140	Dead Tree/Status?	sm	Resident believes the tree in the parkway is dead. The tree is losing a lot of bark and branches everyday and it is leaning towards their house and afraid it might fall. Please check and advise resident the bark is coming off because it is a sycamore and thats what they do there is no other damage at this time.	Tim				
9/11/2023	1:45 PM	resident	3729 Ridge Road		Other: See Notes	sm	resident has yard waste for pickup..Ok	Street	y	bkb		
9/11/2023	2:00 PM	Jacqueline Greer	3143 Grand Blvd	(773) 798-3556	Other: See Notes	sm	resident said the meter was hit and wants someone to come and look at it. Kyle went and looked at it and the pin wasn't in so he fixed it. (meter head change only 12/28/21)	WT/SW				
9/11/2023	2:55 PM	Samantha Poteete	3106 Franklin	(219) 805-0051	Sewer Backup	sm	Resident has dirty water coming up in her basement drain. Please check and advise resident Jimmy and I checked it out. Our sewer is flowing fine, I spoke with the resident.	WT/SW	y	AK	9/12/23	7:09 AM
9/12/2023	1:25 PM	resident	8310 Gordon		Branches Missed	sm	resident has branches that were missed ...Tuesdays route.	Street	y	bkb		
9/12/2023	1:50 PM	Judy Ashley	3222 Wirth Road	(219) 413-8223	Pot Hole	sm	Resident said there are big pot holes on Wirth Road just west of Pettit...OK	Street	y	bkb		
9/13/2023	9:30 AM	Michael Gilmore	8905 Erie street	(219) 384-4482	Dead Tree/Status?	sm	Resident said the tree on Lincoln just east of of Erie street on the north side of the street has branches that keep falling off and hitting cars, also a small branch hit a lady. Resident is afraid someone is going to get hurt. Please check and advise resident tree is in bad shape I will see if it is in easement our on private property	Tim				

9/12/2023	10:15 AM	Toni Bryant	3020 Duluth Street	(708) 275-3748	Sewer Backup	sm	Resident said she has sewer backup in her shower. She said it started after the water main break was fixed a couple of days ago at Duluth and Kennedy Our sewer is flowing fine. Her sewer service is not near where we were working.	WT/SW	Y	AK	9/13/23	11:07 AM
9/12/2023	3:50 PM	resident	Main Street		Pot Hole	sm	Resident said there are pot holes On Main Street (left turn lane) to Indianapolis blvd..Ok	Street	y	bkb		
9/12/2023	1:50 PM	resident	entrance to Georgrtown		Pot Hole	sm	resident said there are potholes at the entrance to Georgetown off Kennedy...Ok	Street	y	bkb		
9/14/2023	9:30 AM	Ronnie Wilson	9011 Hess Drive	(219) 221-5153	Water On/Off Req.	sm	Resident needs the WATER SHUT OFF Friday 9/15/23 7:50am He is having a plumber come to do work Gave to Kyle	WT/SW				
9/14/2023	12:34 PM	Singh	10146 White Oak Ln	(219) 775-5903	Dead Tree/Status?	kw	3 trees in the parkway (Maplewood Ln side) may be dead. Please check and let him know spoke with resident	Tim	y	tg	9/21/23	
9/14/2023	12:35 PM	resident	street between bank /office depot	(219) 308-9720	Pot Hole	sm	resident said there are pot holes on the street between the bank and office depot off of indianapolis blvd by meijer...Ok	Street	y	bkb		
9/15/2023	10:05 AM	Ray Ross	3132 100th St	(219) 924-2956	Other: See Notes	kw	Irrigation line was damaged during CCMG project Water shoots out of the ground when the system is engaged. Also the sprinkler heads were not put back to their original spot. Giving this to Derek	Street				
9/15/2023	10:25 AM	Gina Mercer	2611 40th Street	(219) 228-0621	Water On/Off Req.	sm	Resident needs water shut off Thursday 9/21/2023 at 7:50am. She is having a plumber come to do work. Gave to Kyle	WT/SW	Y	AK	9/21/23	8:39 AM
9/15/2023	1:25 PM	Joe Lesniak	8508 Liable Road	(219) 838-7879	Sidewalk/Curb Issue	sm	Resident would like information on the sidewalk replacement program..Called resident and left message	Street	y	bkb		
9/15/2023	3:23 PM	Thelma Henderson	3738 Sandalwood Dr	(219) 237-2699	Other: See Notes	kw	Resident is complaining about her water smelling fishy. Resident had a Brita water filter pitcher in her refrigerator. The smell was coming from the pitcher. Kyle told the resident to replace the filter in the pitcher	WT/SW	y	kw		
9/18/2023	8:00 AM	resident	3133 Lincoln Street		Loader Stop	sm	Resident has a bush for pickup....Will add to Loader stop List.	Street	y	bkb		
9/19/2023	9:45 AM	Steven Zubrenic	10050 Erie Place	(219) 924-1383	Other: See Notes	sm	Resident said the curb by the driveway is sinking and he wants someone to come and look at it. Please call resident before going, he wants to be there when you look at it We Checked it, the curb is cracking and will need to be replaced. Not a sewer or water line issue.	WT/SW	Y	AK	9/19/23	2:45 PM
9/19/2023	9:45 AM	Steven Zubrenic	10050 Erie Place	(219) 924-1383	Pot Hole	sm	Resident said there is a pot hole in the street...Gave to Brendan.	Street	y	bkb		
9/19/2023	11:43 AM	Robert Strickland	2019 Main Street	(219) 718-4175	Other: See Notes	kw	The ditch in front of this property and others is full of weeds and garbage. She wants to know who is responsible and who will be cleaning it....Apparantly we do, mowing crew wil get to it as soon as they have a chance to do so.	Street	y	bkb		
9/20/2023	10:39 AM	Robert Hastings	9234 Prairie Ave	(219) 838-6743	Pot Hole	kw	Resident has pot holes in front of his house and would like them filled..Gave to Brendan	Street	y	bkb		
9/20/2023	2:30 PM	resident	9342 Kennedy Avenue		Other: See Notes	sm	resident has bagged yard waste for pickup...Dennis will get them sometime today.	Street	y	bkb		
9/21/2023	8:55 AM	Robert Santana	9337 Waymond Avenue	(219) 512-6639	Pot Hole	sm	resident said he has a pot hole in front of his driveway that needs to be fixed, also he is wanting to know if something might be wrong because it was fixed about 5 times..I will take a look at it.	Street	y	bkb		
9/21/2023	2:23 PM	Taeok Bae	3438 42nd Place	(323) 304-8447	Sewer Backup	sm	Resident said she has sewer backup in her front yard. She had TLC out and they said that it was a town issue We see no issue with our line. I am going to have Matt televise the line tomorrow to be 100% sure	WT/SW	Y	AK	9/21/23	3:17 PM
9/22/2023	3:05 PM	Karen Houk	8728 Carolina	(219) 264-4146	Sidewalk/Curb Issue	sm	Resident would like information on the sidewalk replacement program..Talked to resident.	Street	y	bkb		
9/25/2023	8:45 AM	Julie Click	3030 44th street	(219) 743-0438	Other: See Notes	sm	Resident has standing water in her backyard. She doesn't think it is her pool or inground sprinkler. Please check and advise resident We found no chlorine residual, no water moving. But we will keep an eye on it for a while to make sure. I spoke with the resident.	WT/SW	Y	AK	9/25/23	11:09 AM
9/25/2023	12:00 PM	MaryAnn Lee	3013 Strong St	(219) 880-6691	Dead Tree/Status?	kw	Resident believes the tree is hollow on the inside and dead. Lots of large black ants. Please check and let her know need sean to look at with bucket truck to see if rot in holes is bad,we will take down in spring	Tim	y	tg	10/3/23	
9/25/2023	1:15 PM	Joe Lesniak	8508 Liable Road	(219) 838-7879	Sidewalk/Curb Issue	sm	Resident said the curb by the driveway is cracked and would like someone to come and look at it...Left a message sgain Storm sewer under driveway was televised and appears to be in good shape.	Street	y	bkb		
9/25/2023	3:15 PM	Christopher Villar	9330 Saric Drive	(219) 336-6227	Other: See Notes	sm	Resident has standing water in the front yard by the sidewalk. Please check and advise resident Jimmy checked this, water went down after the rain stopped. We will clean and jet the basin to make sure it is running optimally.	WT/SW	Y	AK	9/26/23	7:08 AM
9/26/2023	7:30 AM	Highland Dispatch	8142 Grace Place		Water Break	sm	Highland Dispatch called at 5:59am to say there was a water main break at 8142 Grace Place Done	WT/SW	Y	AK	9/27/23	7:17 AM
9/26/2023	9:35 AM	William Pina	3344 Highway Avenue	(219) 381-6515	Sidewalk/Curb Issue	sm	Resident would like information on the sidewalk replacement program....Talked to Resident.	Street	y	bkb		
9/26/2023	3:45 PM	Brian Flanagan	2120 Martha Street	(219) 746-3647	Sidewalk/Curb Issue	sm	Resident said a section of the sidewalk is raised about 5 inches. He wants to know what can be done since it is a public sidewalk. I told him we have a sidewalk replacement program and you would call and let him know all the details...Talked to resident and straighten him out.	Street	y	bkb		
9/27/2023	2:15 PM	Trudi Kane	8507 Johnston	(219) 712-9310	Other: See Notes	sm	Resident said she smells sewage all over at her house. She wants someone to come and check it out It appears to be coming from her sump pump. She was told to get a plimber to take a look at it.	WT/SW	Y	AK	9/27/23	3:04 PM
9/17/2023	2:20 PM	resident	8426 Parrish Ct		Other: See Notes	sm	Resident has a large branch that fell in the parkway to be picked up..Already been picked up.	Street	y	bkb		
9/28/2023	10:20 AM	Gary Williams	8012 Kennedy Avenue	(219) 680-9293	Pot Hole	SM	Resident said the alley behind their business has a lot of big pot holes and asked if they can be filled or the alley be re-graded...Will get it as soon as possible	Street	y	bkb		
9/28/2023	1:30 PM	steve Click	3030 44th Street	(219) 742-9648	Other: See Notes	sm	Resident called back (call log 9/25) because they still have standing water in their backyard...Water leak is fixed.	WT/SW	y	bkb		
9/29/2023	10:33 AM	Sylvia Wiening	8217 Grace Pl	(219) 838-3476	Tree/Branch Issues	kw	Resident paid for new sidewalk last year. The neighbors tree roots are causing damage to her sidewalk again and also the driveway. Can we check the status of the tree and also talk to her about any possible solutionsGAVE TO MR BELL	Tim				
10/2/2023	8:46 AM	Robert Zuccarelli	3006 44th St	(773) 931-2711	Locate Lines/B-box	kw	Resident needs bbox located and checked for function. Plumber is coming today to fix a leaking spigot. Resident will call back when plumber is done to have the water turned back on. Kyle is taking care of this.	WT/SW	y	kw		
10/2/2023	8:50 AM	John Burbridge	3142 Martha	(815) 514-8320	Other: See Notes	sm	Resident needs the water shut off at the bbox. The shut off valve inside is leaking and the resident is getting water in his basement. Kyle is going to shut water off Box is located and raised. He will call when the work is done for turn on.	WT/SW	Y	Ak	10/2/23	10:31 AM
10/2/2023	12:22 PM	Kathy Holland	8923 Southmoor	(219) 838-4886	Sewer Backup	kw	Resident has had sewage backup since late last week. Called Jimmy to check the main Main line is clear. Resident was advised to call a plumber for her lateral	WT/SW	y	kw	10/2/23	12:39 PM
10/2/2023	2:00 PM	Ted Bryak	9344 Anthony Place	(219) 712-4257	Sidewalk/Curb Issue	sm	Resident would like information on the sidewalk replacement program	Street				
10/3/2023	8:50 AM	resident	3747 44th Street		Pot Hole	sm	Resident has a couple of pot holes on Manor (corner house) that need to be fixed...Added to the list.	Street	y	bkb		
10/3/2023	8:50 AM	resident	45th st by Kleinman		Pot Hole	sm	resident said there is a pot hole on 45th st going west from Kleinman...This is a valve box that is scheduled for repair.	Street	y	bkb		
10/3/2023	8:50 AM	Beverly	3737 Ridge Rd	(219) 838-8718	Water Break	kw	Been leaking by the bbox for a few weeks. Kyle checked it and is unsure if it is the service line. Due to crews replacing a hydrant today, this will be checked tomorrow. Advised the company that at this point we are unsure if it is in the service line and will call them back tomorrow The leak is on their side of the box. They were advised and told to have a plumber come out.	WT/SW	Y	AK	10/4/23	9:30 AM
10/3/2023	9:30 AM	Matthew Cross	8544 Kennedy Avenue	(708) 829-3323	Pot Hole	sm	Resident said the alley behind their business has a lot of big pot holes and asked if they can be filled ....Didnt see any large pot holes, just needs a little stone, will get to it as soon as we can.	Street	y	bkb		
10/3/2023	10:15 AM	Kathleen Koontz	2533 Lincoln Street	(219) 313-4620	Water On/Off Req.	sm	Resident needs the the WATER SHUT OFF- WEDNESDAY 10/4/23 11:30am because she is having a plumber come out for repairs. Kyle got it	WT/SW	Y	AK	10/4/23	3:13 PM
10/3/2023	12:30 PM	resident	Ohio Place and Wirth Road		Pot Hole	sm	Resident said there is a pot hole at Ohio Place and Wirth Road that needs to be filled and 2 more on Wirth by Kuipers...Added to the list.	Street	y	bkb		
10/4/2023	11:31 AM	Linda Wilson	2534 Martha St	(219) 765-3455	Other: See Notes	kw	Patch of grass at the end of the street, she says the town usually mows has not been touched in 3 weeks. Do we mow this? Branches in that same area have not been picked up in weeks..Yes we do, about once a month.	Street	y	bkb		
10/5/2023	12:31 PM	Plaza Lanes			Sewer Backup	kw	Owner states that the eastern side of the parking lot is backed up with water. Jimmy checked the mains, all clear. Aaron is verifying it is a private line and will speak to the owner. Informed owner that the basin lines in the parking lot were private and his responsibility. He is getting a plumbing company to take care of it.	WT/SW	Y	AK	10/5/23	1:08 PM
10/6/2023	9:25 AM	resident	3105 Lakeside Drive		Other: See Notes	sm	Resident has bagged yard waste for pickup...Dennis will get them sometime today.	Street	y	bkb		
10/10/2023	3:30 PM	Kathy Formosa	9323 Forrest Drive	(219) 922-1718	Other: See Notes	sm	Resident believes the tree (next to the driveway) in the parkway is dead. Please check and advise tree is not dead enough for us to takedown	Tim	y	tg	10/13/23	
10/11/2023	9:20 AM	James Lewandowski	2039 Martha Street	(708) 351-3545	Sewer Backup	sm	Resident has backup in his basement and has Fikema there now and went out 150 ft and nothing. Our main is clear	WT/SW	Y	AK	10/11/23	11:13 AM
10/12/2023	7:30 AM	Robert	9330 Kennedy Avenue	(219) 743-4049	Other: See Notes	sm	Robert said water and sand Is coming up from the ground in the front of the Nazarene church 8" water main leaking. Repairing it today.	WT/SW	Y	AK	10/12/23	8:33 AM

10/12/2023	1:05 PM	resident	9745 Kennedy Avenue	(219) 201-9579	Other: See Notes	sm	Resident said there is a branch hanging over on Kennedy Ave that needs to be cut.property owner has called a tree service and is going to take care of it - It is on his property	Tim	y	tg	10/16/23	
10/12/2023	2:30 PM	Phillip	9006 Highland Street		Other: See Notes	sm	Meter is leaking Kyle went to check and the meter was frozen, told resident to go purchase a new meter at town hall	WT/SW	Y		10/16/23	7:05 AM
10/13/2023	11:30 AM	Frank Livingston	2942 45th Street	(219) 805-1180	Sewer Backup	sm	Resident has sewer backup in the shower and the bathroom in the garage - Please check and advise resident Jimmy is going Our main is clear	WT/SW	Y	AK	10/16/23	7:05 AM
10/13/2023	11:40 AM	resident	kennedy and highway		Sink Hole	sm	Resident said there is a sink hole on Kennedy going south bound by highway (gas station) west sidelane We believe this is from AT&T boring. It has been cold patched.	WT/SW	Y	AK	10/16/2023	7:05 AM
10/17/2023	10:28 AM	Gary Luce	2836 Eder St	(219) 298-6366	Branches Missed	kw	Last Tuesday resident called and was informed that if he dragged his branches from the back to the front they would be picked up, per the supervisor, Monday (yesterday) He is upset this was not done..Tyler will get them today.	Street	y	bkb		
10/17/2023	12:15 PM	Pete Jimenz	9148 Prairie Ave	(219) 588-3000	Other: See Notes	kw	Resident had a tree come down in September from a storm. The tree was cut down to the stump. He was told that the stump would be grinded. That has not happened. He stopped in today to inquire. I do not see him on any of the list for Dave's. Please check into this and let this gentleman know when he can expect the work to be done Resident stopped in 10/20/23 and states he no longer wants the stump removed. I AM CLEAR TIM	Tim	y	tg	10/20/23	
10/18/2023	1:19 PM	Mrs. Knopf	3113 Lakeside Dr	(219) 545-8650	Restorations	kw	Wondering when the restorations will be done for a tree that was removed due to storm damage. She also says the sprinkler system is winterized but a head that was replaced doesn't work. Can someone go talk to her please. She is difficult to communicate with on the phone because of hearing issues.....Restoration is done for now, will come back in the spring to remove the rest of the stump and repair the parkway, this was explained to her when crew was there.	Street	y	bkb		
10/18/2023	2:40 PM	resident	3429 Strong Place		Other: See Notes	sm	Resident has yard waste bags for pickup....Gave to Jeff/Dennis.	Street	y	bkb		
10/18/2023	3:15 PM	resident	8635 Orchard Drive	(219) 513-6229	Other: See Notes	sm	resident has branches for pickup....Mondays route	Street	y	bkb		
10/18/2023	3:30 PM	Tameeka Caesar	1818 Duluth Street	(708) 953-3596	Sidewalk/Curb Issue	sm	Resident wold like information on the sidewalk replacement program	Street				
10/19/2023	12:30 PM	resident	3248 41st street		Other: See Notes	sm	Resident said there is yard waste for pickup (by the fire hydrant)...Gave to Jeff, said nothing there.	Street	y	bkb		
10/19/2023	1:15 PM	Charles Zavesky	Teakwood and Northwood		Tree/Branch Issues	sm	Resident said the tree on the north/west corner of Teakwood and Northwood is dead. Please check	Tim				
10/23/2023	2:55 PM	RESIDENT	2100 Kennilworth		Other: See Notes	sm	resident has 10 bags of yard waste for pickup....Gave to Jeff/Dennis	Street	y	bkb		
10/24/2023	11:25 AM	resident	3821 Jewett Avenue		Other: See Notes	sm	resident has a bush for pickup...Will put on Loader List	Street	y	bkb		
10/25/2023	1:10 PM	resident	8917 Southmoor		Other: See Notes	sm	Resident has a 10ft branch that fell for pickup...Gave to chipper crew	Street	y	bkb		
10/25/2023	2:30 PM	Danielle Cummings	9435 Anthony Place	(219) 359-7933	Other: See Notes	sm	Resident has backup in her utility sink. Please check and advise resident It was the sink trap. Advised redident to snake it out or call a plumber	WT/SW	Y	AK	10/26/23	7:00 AM
10/26/2023	7:45 AM	resident	3511 43rd Pl.		Branches Missed	sm	Resident said her branches were missed ....Not picked up because there is a car in front of them, will check again and if car or cars are gone then they will get picked up. The car is being moved so the branches can be picked up	Street	y	bkb		
10/26/2023	10:30 AM	Hannah - Dakota Property	8951 O'Day Drive	(219) 798-5828	Other: See Notes	sm	Kyle went over to shut the water off because the resident was doing repairs but found the bbox was broken. Will call in locates to repair Locates are called in, we will be repairing this ASAP. Hopefully by mid week next week.	WT/SW	Y	AK	10/26/23	11:15 AM
10/26/2023	1:20 PM	Joyce Erb	2430 Ridge Road		Pot Hole	sm	Resident said there is a big pot hole on Ridge in front of her driveway....On the list	Street	y	bkb		
10/27/2023	10:45 AM	Brett - Round The Clock		(708) 715-7825	Sign down/damaged	sm	There is a NO TURN ON LEFT sign that was hit and is stood up to the left of the front door. .....Dennis got it.	Street	y	bkb		
10/30/2023	7:30 AM	resident	2134 Zandstra Ct	(219) 924-4666	Branches Missed	sm	branches missed on Fridays route..We don't pick branches up here, its private.	Street	y	bkb		
10/30/2023	9:50 AM	Pat	3025 97th place	(219) 218-1968	Other: See Notes	sm	the pavement is breaking up around the sewer cover, the police came out and put cones up, can you please check Private sewer in parking lot	WT/SW	Y	AK	10/30/23	11:39 AM
10/30/2023	12:18 PM	Walter West	9151 Waymond	(219) 743-7083	Other: See Notes	kw	Resident believes his sidewalk is buckling due to the bbox/or water lines under his sidewalk. No standing water. Please check then let him know he can call for sidewalk replacement info It appears the ground has shifted under the sidewalk. It is not a water line issue though.	WT/SW	Y	AK	10/30/23	1:08 PM
10/30/2023	1:08 PM		3228 George Street		Other: See Notes	kw	Resident had a trash and recycle can delivered that he doesn't need. Please have someone pick them up tomorrow, Tuesday October 31st toward the end of the day....Gave to Jeff	Street	y	bkb		
10/31/2023	9:35 AM	Linda Bronson	2935 Ross Street	(219) 614-6099	Other: See Notes	sm	Resident is having done and wants us to check our main. She is having problems with roots. Please advise resident Our main is clear. Per Matt and Grant.	WT/SW	Y	AK	10/31/23	11:31 AM
10/31/2023	1:15 PM	Nancy Carrothers	9334 Ellen Drive	(219) 808-7117	Other: See Notes	sm	Resident said she has a broken pipe and her house smell like sewage She has a cracked foundation and water is leaking into her vent. Which she taped closed. So there is nothing we can do for her. Jimmy spoke with her.	WT/SW	y	AK	10/31/23	2:23 PM
11/2/2023	10:30 AM		3331-3337 Farmer Dr.		Tree/Branch Issues	kw	Between these 2 homes there is a large branch underneath the street light blocking the light shining on the road. This is on a curve. Tim checked this and will have Jeff remove the branch when he has time	Tim	y	tg	10/31/23	
11/3/2023	11:28 AM		9347 Southmoor		Leaves Pickup	kw	Resident has approx. 5 plastic bags of leaves out for collection. The crews went by and didn't grab them...Picked up.	Street	y	bkb		
11/3/2023	2:31 PM	Oscar Lopez	9505 Kennedy Ave	(219) 359-5819	Leaves Pickup	kw	Resident has LOTS of leaf bags out for pickup. He also was mistakenly told that his pickup is on Friday's for the route (I believe he is Wednesday) He was late getting the loose leaves to the curb because of this..Zone 8 , be back in 2 weeks.	Street	y	bkb		
11/3/2023	2:31 PM	The lady that pays you	2814 Grand (alley east side of Kennedy)	(219) 838-1080	Pot Hole	kw	Behind the approach there is a large pothole. Another one going towards Strong behind sixers. Can we fill these please....Yes	Street	y	bkb		
11/7/2023	3:30 PM	Kyle Kompier	3133 Maple Drive	(219) 427-9327	Other: See Notes	sm	Resident said the bbox in the backyard is sticking out of the ground about 10" and asked if it can be lowered. He has kids and is afraid they are going to get hurt Kyle repaired this and I will run some seed over there in a bit.	WT/SW	Y	AK	11/8/23	8:04 AM
11/8/2023	10:40 AM	resident	8932 Schneider		Other: See Notes	sm	resident has bagged yard waste for pickup Jeffery will grab them today	Street	Y	AK	11/8/23	11:11 AM
11/8/2023	3:45 PM	resident	3321 41st Place		Other: See Notes	sm	resident has bagged yard waste for pickup..Gave to Dennis.	Street	y	bkb		
11/9/2023	2:30 PM	Bob Witzke	2111 White Oak Lane	(219) 924-7292	Sidewalk/Curb Issue	sm	Resident said one side of the 5ft section of the curb in front of the mailbox is raised about 1 inch and causing flooding. Resident said someone told him that it would be fixed. Please check and advise resident.....We will take a look, but I know of no one who told him it would be fix by us.	Street	y	bkb		
11/10/2023	8:45 AM	Mark Ramoska	3237 Duluth Street	(708) 288-1379	Water On/Off Req.	sm	Resident is having a plumber come today because his shut off valve in the house is leaking. He needs the water shut off We are trying to locate to shut off now. He probably should have called ahead of time.	WT/SW	Y	AK	11/10/23	9:45 AM
11/10/2023	8:55 AM	resident	3336 Highway		Other: See Notes	sm	resident has 5 bags of yard waste for pickup..Dennis will get them.	Street	y	bkb		
11/10/2023	12:50 PM	Michelle	2635 Streong	(219) 851-8730	Other: See Notes	sm	Resident had a plumber out to rod out her drain because she heard gurgling in the bathtub drain. They put a video camera in and found a buildup of water from the sidewalk to the street. Can you check our side? Please advise resident Our main is clear, Jimmy and Adam spoke with her.	WT/SW	Y	AK	11/10/23	2:33 PM
11/10/2023	2:25 PM	Susan	3113 Lakeside Drive	(765) 914-1546	Tree/Branch Issues	sm	Resident said the town took a tree down but the roots still need to be removed and leveled. Also, the sprinkler head was broken at that time and replaced but the sprinkler head is too high and needs to be lowered resident was advised that it would be better to wait for spring to do the restoration	Tim	y			
11/15/2023	1:50 PM	resident	2734 Grand Blvd		Pot Hole	sm	resident said there is a huge pot hole in the alley by her garage, she asked if someone could please come and fix it...Will add to the list.	Street	y	bkb		
11/16/2023	1:30 PM	Brian Sopcich	8111 East 4th Place	(219) 308-7522	Pot Hole	sm	Resident said the alley is full of pot holes and aske if they can be fixed. Resident would also like to talk to Brian....Talked to resident and made him happy.	Street	y	bkb		
11/17/2023	10:30 AM	resident	9148 Southmoor		Other: See Notes	sm	resident has bags of yard waste for pickup..Todays route	Street	y	bkb		
11/20/2023	8:30 AM	Lindsey Sandbothe	3218 Highway Avenue	(312) 848-0173	Other: See Notes	sm	Resident is having issues with her sewer line, her toilet will not flush. She had a plumber out but wants us to check our side. Please advise resident Our main is clear. She has a plumbing company comingout to repair her line	WT/SW	Y	AK	11/20/23	8:57 AM
11/20/2023	10:00 AM	Joyce Erb	2430 Ridge Road		Pot Hole	sm	Resident said there is a big pot hole in front of her driveway that needs to be repaired..ok	Street	y	bkb		

11/20/2023	11:15 AM	Priscilla	2652 Glenwood	(219) 318-9308	Leaves Pickup	sm	Resident has leaves for pickup, she thought she saw the leaf vac go by but wasn't sure and wanted to make sure the leaves were picked up..Zone 1, Crews have already moved on to Zone 2, they should have been out for todays pick up.	Street	y	bkb		
11/21/2023	7:50 AM	Mel	9826 5th St	(219) 218-8212	Drainage Issues	kw	Storm drain in front of his house is not draining well. We supposedly did some work on this last year. He would like it checked please Jimmy is heading over that way now.	WT/SW	Y	AK	11/21/23	8:03 AM
11/21/2023	8:00 AM	resident	2917 Condit		Other: See Notes	sm	Resident has bagged yard waste for pickup..Ok	Street	y	bkb		
11/21/2023	8:45 AM	Joseph Zalewski	3904 Wirth Road	(219) 923-7011	Drainage Issues	sm	Resident said the storm drain is not draining and there are no leaves there. He asked if we could please come and check Jetted and draining	WT/SW	Y	AK	11/21/23	9:33 AM
11/21/2023	10:40 AM	resident	3927 Highway		Leaves Pickup	sm	resident has bagged leaves for pickup	Street	y	bkb		
11/21/2023	11:34 AM	Barbara Cowan	9044 Ohio Place	(219) 741-2488	Pot Hole	kw	Resident is just making us aware that there are several pot holes on the Wirth side by her home going down to Kuipers...Will add to list	Street	y	bkb		
11/21/2023	1:30 PM	Edith Romero	3309 41st Place	(219) 765-2969	Pot Hole	sm	Resident has a big pot hole in front of her house. She said when cars go by pieces from the pothole sometimes hits her car. She asked if it could please be fixed...Will add to list	Street	y	bkb		
111/22/2023	1:30 PM		2707 Parkway Dr		Leaves Pickup	kw	Resident has leaf bags out for collection. I believe she is zone 5..Ok	Street	y	bkb		
11/22/2023	10:22 AM	Mike Lewandowski	8223 5th St	(219) 923-9201	Tree/Branch Issues	kw	Check tree in parkway. Resident said it is leaning towards his home and losing its bark. He is afraid it is going to fall tree does have bark falling off so it will be added to the list for jeff to cut resident was advised it may not be until spring.	Tim	y			
11/22/2023	1:30 PM	resident	3030 Lakeside Drive		Leaves Pickup	sm	resident has bagged leaves for pickup..Ok	Street	y	bkb		
11/22/2023	1:35 PM	resident	3029 Grand		Leaves Pickup	sm	resident has bagged leaves for pickup...Ok	Street	y	bkb		
11/27/2023	8:28 AM	Scott	3127 Maple Dr	(219) 689-3375	Leaves Pickup	kw	Resident had bagged leaves out last week. They sucked up all the loose leaves on the block but left his bags...Ok.	Street	y	bkb		
11/27/2023	8:35 AM	resident	3029 Grand Blvd		Leaves Pickup	sm	resident has bagged leaves for pickup..Yes we know, and it is actually Zone 2, but Jeff and Dennis will try and get them sometime today when they have a chance.	Street	y	bkb		
11/27/2023	9:35 AM	Anne Hascke	3030 Strong Street	(219) 616-5527	Tree/Branch Issues	sm	Resident said the tree in the parkway has a hole in it and is afraid it might fall down. Please check and advise resident tree has a hole it will be added to the list of tree's for jeff to cut resident has been advised	Tim	y			
11/27/2023	9:50 AM	resident	3920 Juniper Trail		Leaves Pickup	sm	resident has bagged leaves for pickup....Gave to Dennis/Jeff	Street	y	bkb		
11/27/2023	3:39 PM	Janice	3439 42nd St	(219) 924-4872	Leaves Pickup	kw	Resident and neighbor have bags (yard waste) out for pickup that the garbage men didn't take...Gave to Dennis/Jeff	Street	y	bkb		
11/28/2023	9:50 AM	Maxine	2905 43rd St	(219) 924-4639	Other: See Notes	kw	Resident is going to be leaving for the winter and called to see if we could check her bbox to make sure it works. Her inside valve doesn't work. Trey and Kyle checked the bbox and it is broken. Please add it to the repair list	WT/SW	y	bkb		
11/28/2023	3:30 PM	Linda Torringa	9512 Erie Street	(219) 922-1566	Other: See Notes	sm	Resident said her sump pump will not shut off and she sees water in her neighbors driveway. She wants someone to come and check. Please advise resident Kyle said this is the residents issue / advised her to call a plumber	WT/SW	y	bkb		
11/30/2023	11:55 AM	Julia Martinwz	10030 Erie Place	(219) 359-7034	Water Break	sm	Resident said water is gushing out of the parkway....Crew on site.	WT/SW	y	bkb		
11/30/2023	12:59 PM	Warren	3534 41st Pl	(219) 924-6390	Other: See Notes	kw	Resident hit the lid to the bbox while cutting the grass. He is unable to locate the lid but is asking if it can be replaced. His wife is freaking out that it will do something to their water in the house cause there isn't a cap :)... David replaced the lid	WT/SW	y	bkb		
12/1/2023	7:55 AM	Jeanette Ramirez	2942 101st Street	(815) 761-5507	Drainage Issues	sm	Resident said the storm drain is not draining and there are no leaves there. Resident said it is flooding, can you please check....Jimmy and Adam are all over it.	WT/SW	y	bkb		
12/1/2023	8:00 AM	Radley Robinson	3842 Clough	(219) 741-5872	Drainage Issues	sm	Resident said the storm drain isn't draing and it is starting to flood. Can you please check....The number 1 sewer team has it handled.	WT/SW	y	bkb		
12/1/2023	9:18 AM	resident	9200 Grace		Drainage Issues	kw	Mark received a complaint about flooding in this area. Sent Jimmy and Adam. No issues found	WT/SW	y	kw		
12/1/2023	10:32 AM	Robert Grau	9034 Cottage Grove Pl	(219) 614-1656	Restorations	kw	Had a water main break in backyard back in September. The fence is still not replaced and a tree was removed and the stump has never been taking care of. He would like to know when the restorations will be done. Please call.	WT/SW				
12/1/2023	10:00 AM	Mark Wakefield	2649 37th Street	(219) 313-2941	Water On/Off Req.	sm	Resident needs his WATER SHUT OFF - DECEMBER 11th at 7:45am because he is changing the valve after the meter is replaced at 8:00am I gave this info to Trey - please locate bbox	WT/SW				
12/1/2023	11:00 AM	resident	9826 Kennedy Avenue		Street Light Out	sm	resident said the street light is out on the west side of Kennedy Avenue.	Street				
12/1/2023	2:40 PM	Sylvia Wiening	8217 Grace Pl	(219) 838-3476	Other: See Notes	sm	Resident said there was a water main break before and there are stakes in the ground still. She wants to know when this will be removed. Please call resident	WT/SW				
12/1/2023	3:00 PM	resident	3927 Jewett Avenue		Other: See Notes	sm	Resident has bagged yard waste for pickup...Gave to Dennis	Street	y	bkb		
12/1/2023	3:50 PM	George	9248 Erie Street		Leaves Pickup	sm	resident said his leaves were missed and asked if they can be picked up....Zone 8, they were not out in time.	Street	y	bkb		
12/5/2023	9:00 AM	resident	9208 Waymond Avenue		Leaves Pickup	sm	resident has bagged leaves for pickup....Gave to Dennis/Jeff	Street	y	bkb		
12/5/2023	10:15 AM	resident	3815 99th Street		Leaves Pickup	sm	Resident has bagged leaves for pickup..Assuming this is 2815 99th St?...Dennis will loook for them.	Street	y	bkb		
12/5/2023	10:15 AM	resident	2082 Ramblewood		Other: See Notes	sm	Resident has a big branch for pickup, she doesn't think it will go through the chipper....We wil let the chipper decide that on Friday.	Street	y	bkb		
12/5/2023	12:40 PM	resident	10334 Erie		Leaves Pickup	sm	resident has bagged leaves for pickup..Jeff/Dennis will get them.	Street	y	bkb		
12/5/2023	1:50 PM	resident	9826 Kennedy Avenue		Street Light Out	sm	Resident called and said she saw Midwestern out to fix the streetlight but it still doesn't work (call log 12/1/2023)..Then there is another issue with it, they will take care of it.	Street	y	bkb		
12/5/2023	4:01 PM	resident	3327 Eder St		Leaves Pickup	kw	Resident has had leaf bags out for collection...Gave to Dennis/Jeff	Street	y	bkb		
12/6/2023	10:55 AM	Betty	9208 Grace Place	(219) 614-5272	Drainage Issues	sm	Resident said the drain across the street from her isn't draining. Please check and advise....Adam got it to drain, but sewer repair is needed.	WT/SW	y	bkb		
12/6/2023	12:45 PM	Nancy McKinnie	3314 Wirth Road	(219) 923-6051	Water On/Off Req.	sm	Resident needs her Water Shut Off - Thursday 12/7/23 at 8:00am for repairs. I gave to Kyle	WT/SW	y	bkb		
12/8/2023	10:55 AM	Gnerlich	Erie and 43rd Street	(219) 924-2198	Other: See Notes	sm	Resident said there is standing water on the corner of Erie and 43rd. Kyle is going	WT/SW				
12/8/2023	11:50 AM	resident	8840 Parkway		Leaves Pickup	sm	Resident said the leaves were missed for their pickup...Handful of leaves and a vehicle in the way.	Street	y	bkb		
12/8/2023	11:55 AM	resident	3625 Condit		Leaves Pickup	sm	resident said his leaves were missed and asked if they can be picked up..No leaves here, but there were branches at the end of the street that Dylan picked up.	Street	y	bkb		
12/8/2023	2:15 PM	resident	45th St and Parkway		Pot Hole	sm	resident said there is a big pot hole and some smaller ones at the intersection...On the list.	Street	y	bkb		
12/8/2023	3:50 PM	Ron - Sieb Sales	10001 Express Drive		Other: See Notes	sm	A strong detergent smell in the air and soap suds in the ditch behind the business Mike Pipta is going	Mark				
12/11/2023	3:35 PM	resident	3019 99th Street		Leaves Pickup	sm	resident has bagged leaves for pickup..Dennis will get them	Street	y	bkb		
12/11/2023	3:35 PM	Jacquline			Pot Hole	sm	Resident called and said there is a pot hole on Parkway by the service road off of 45th st...its on the list.	Street	y	bkb		
12/11/2023	1:25 PM	resident	9928 Branton		Leaves Pickup	sm	resident has bagged leaves for pickup....Gave to Dennis/Jeff	Street	y	bkb		
12/13/2023	2:15 PM	resident	kennedy and highway		Pot Hole	sm	Resident said there is a big pot hole going northbound on Kennedy by Highway, by the manhole..10-4	Street	y	bkb		
12/14/2023	10:00 AM	Robert Brower	3214 O'Day Drive	(773) 505-3507	Tree/Branch Issues	sm	Resident said branches keep falling off the trees in the parkway and believes the trees are dead. Please check and advise resident left message needs to be checked in spring to see if its dead	Tim	y	tg		
12/14/2023	12:45 PM	Linda Garritano	9213 Highland Place	(219) 306-5044	Tree/Branch Issues	sm	Resident said the tree in the parkway at her neighbors house (9207 Highland Place-by her driveway)is dead, dropping branches, raising the sidewalk and thinks it is dangerous. Please check and advise resident because there is no leaves tree needs to be checked in spring	Tim	y	tg		
12/14/2023	2:45 PM	Cindy - TLC Plumbing	3925 45th Street	(219) 922-6214	Other: See Notes	sm	Water is pouring in the hallway between Bartons and Happy Nails and thinks there is a water main break This is something leaking under the building, most ikely one of their service lines. TLC and the Property manager for stracks are getting a leak detection company to look at it. They have my number if things get worse so we could shut off the main line by the store.	WT/SW	Y	AK	12/18/23	12:50 PM
12/18/2023	11:37 AM	Dirk Fiekema	2851 Franklin	(219) 741-5796	Locate Lines/B-box	kw	Jane is resident (443) 614-5121. Please locate and check function of bbox. Call Dirk at Fiekema to let him no if everything is good so he can schedule replacing the inside shut valve that is not working Sent to Trey	WT/SW	Y	AK	12/18/23	12:52 PM
12/19/2023	10:00 AM	Alma Mol	3336 Franklin	(708) 715-1230	Locate Lines/B-box	kw	Please locate bbox and check function so plumber can change inside valve that is leaking in the basement Calling in loctes to put in a b`box. Hopefully tommrow, Thursday at the latest.	WT/SW	Y	AK	12/19/23	11:00 AM

12/20/2023	8:55 AM	Ted Witham	8703 Liable Road	(219) 308-5408	Tree/Branch Issues	sm	Resident believes the tree in thw parkway (by the walkway to the front porch) is dead. Branches keep falling off the tree (silver maple). Also a branch fell but is still in the branches, resident is afraid the branch might fall and hurt someone. Please check and advise resident tree needs to come down in spring	Tim	y	tg		
12/26/2023	1:30 PM	resident	9311 Wildwood Drive		Leaves Pickup	sm	resident has bagged leaves for pickup..Gave to Dennis	Street	y	bkb		
12/27/2023	8:35 AM	resident	3639 Wirth N		Leaves Pickup	bb	Resident called about leaves being missed. Sent Tim and Tyler to pick it up.	Street	y	BB		
12/27/2023	9:38 AM	resident	8830 Parkway	(219) 902-7112	Other: See Notes	bb	Resident called in about sod damage done by River Construction on Parkway. Asking if River Construction can repair the damage. Mark called River Construction and RIVER Construction will take care of it.	WT/SW	y	BB		
12/27/2023	10:15 AM	Resident	3713 43rd St.	(219) 924-8460	Leaves Pickup	bb	Resident wants his leaves picked up tomorrow. Will send Tyler and Tim to his house tomorrow to pick them up.	Street				
12/27/2023	11:10 AM	Resident	3447 43rd St.		Leaves Pickup	bb	Resident thought her leaf pile was missed. Called Tyler and Tim to go pick it up.	Street	y	BB		
12/27/2023	11:44 AM	Resident	9350 Idlewild	(219) 545-3899	Garbage not picked up	bb	Resident called about garbage not being picked up. I called Republic Services,(not the supervisor but the costumer service line), and they said they will send a garbage truck around tomorrow.	Street	y			
12/27/2023	12:08 PM	Resident	2067 Ramblewood Drive		Leaves Pickup	bb	Resident called in about some leaf bags. Sent Tyler and Tim over to pick it up.	Street	y	BB		
12/27/2023	12:09 PM	Resident	3903 Jewett Ave.	(619) 817-1511	Garbage not picked up	bb	Resident called about garbage being missed along with other waste bags around the cans. Called the Republic Services and they said they will be sending a garbage truck around today or tomorrow.	Street				
12/27/2023	12:10 PM	Resident	2453 Lincoln St.	(708) 954-0258	Recycle not picked up	bb	Resident called about their recycling and the excess garbage bags that were missed in front of her house. Called Republic Services, recycling in that area is picked up biweekly so the next service for her recycling is January 3rd. The excess garbage bags that were left will be picked up either today or tomorrow.	Street				
12/27/2023	12:41 PM	Resident	3626 Highway	(219) 484-3553	Garbage Can Replacement	bb	Resident called about his garbage can and recycling bin being cracked and deteriorated due to them being old and requested a new garbage can and recycling bin. Called the Republic Services customer support and they said that they can get a new recycling bin and garbage can to the tenant's house on January 3rd. Republic Services is behind because of the holidays and they said it may take up to a week for the replacement cans to arrive.	Street				
12/27/2023	1:00 PM	Resident	1201 Express Drive	(219) 670-2711	Other: See Notes	bb	Business owner from Grimmler Auto called and was wondering when the water department was going to check a water valve. Mark called Kyle to go and check on it.	WT/SW				
12/27/2023	1:43 PM	Resident	3110 Duluth St.	(219) 838-0112	Other: See Notes	bb	Resident called wanting the 2024 garbage collection sheet. He says we can mail it to him.	Street				
12/28/2023	10:30 AM	Marsha Bell	3632 41st Lane	(219) 924-1597	Water On/Off Req.	sm	Resident needs the WATER SHUT OFF - FRIDAY 12/29 AT 7:50AM because she is having a plumber come to do some repairs - Gave to Kyle Bbox is broken and needs to be repaired/when done call resident so she can call and schedule an appt with her plumber	WT/SW				
12/29/2023	12:02 PM	George	3629 43rd St	(219) 670-4274	Drainage Issues	kw	Resident had backup in the basement a few days ago and called a plumber to rod the line. Backup is occuring again today and when he called the plumber back they advised him to call us because they have had multiple calls in that area. Sending Jimmy to check the main. Our end is clear, resident advised. Plumber is there now	WT/SW	y	kw		
12/29/2023	3:40 PM	resident	2703 Eder Street		Other: See Notes	sm	Resident has a Christmas tree for pickup..OK	Street	y	bkb		

ATTACHMENT E

ANNUAL SANITARY SEWER OVERFLOW REPORTS (SSO)

AND SUMMARY OF SEMI-ANNUAL REPORTS

March 2019; Revised June 2019; Revised March 2020;
Revised February 2021; January 2024

Town of Highland
Summary of Sanitary Sewer Overflows Reported in 2014

Date / Time	Drainage Basin Location	Location Description	Type of Overflow Event	Estimated Quantity of Overflow	Cause	Rainfall Event Classification	Comments	Receiving Waters
9-10-14 8:00 AM to 5:00 PM	5th Street Basin	MH's 1345 and 3005 all on 5th St Interceptor	At 2 Constructed Overflows out of 5th St San Swr into 5th St Stm Swr	437,922 gal	Rainfall, Excessive I/I, Under Capacity Sewer	6 hr, 4.7 mo to 6 hr, 9.2 mo 1.34 to 1.68 inches Total Rainfall	Untreated Release	Little Calumet River
8-23-14 3:00 PM to 5:00 PM	5th Street Basin	MH's 1345 and 3005 all on 5th St Interceptor	At 2 Constructed Overflows out of 5th St San Swr into 5th St Stm Swr	4,851 gal	Rainfall, Excessive I/I, Under Capacity Sewer	30 min, 1.5 yr to 30 min, 8.4 yr (0.98 to 1.49 inches Rainfall) 2.16 inches Total Storm Rainfall	Untreated Release	Little Calumet River
6-30-2014 to 7-1-2014 7:30 PM to 9:00 AM	5th Street Basin	MH's 1230, 1345 and 3005 all on 5th St Interceptor Bypass Pump at Duluth and Grace Pl Bypass Pump at 5th St Lift Stn.	At 3 Constructed Overflows out of 5th St San Swr into 5th St Stm Swr At 2 Bypass Pump Locations	1,318,562 gal	Rainfall, Excessive I/I, Under Capacity Sewer	30 min, 10.3 mo to 30 min, 3.4 yr (0.86 to 1.20 inches Rainfall) 2.32 inches Total Storm Rainfall	Untreated Release	Little Calumet River
5-11-2014 to 5-12-2014 6:45 PM to 1:00 AM	5th Street Basin	MH's 1098, 1230 and 1345 all on 5th St Interceptor Bypass Pump at Duluth and Grace Pl	At 3 Constructed Overflows One Bypass Pump Location	702,707 gal	Rainfall, Excessive I/I, Under Capacity Sewer	15 min, 10.8 mo to 15 min, 4.2 yr .63-.96 inches Total Rainfall	Untreated Release	Little Calumet River
4-2-2014 4:10 PM	5th Street Basin	2954 101st St	Basement Backup	1000 gal	Blockage in Public Sewer	N/A	Blockage removed and Overflow Released Back to Sanitary Sewer	N/A
4-3-2014 9:00 AM to 3:00 PM	5th Street Basin	MH's 1098, 1230, and 1345 all on 5th St Interceptor Bypass Pump at Duluth and Grace Pl	At 3 Constructed Overflows. One Bypass Pump Location	969,803 gal	Rainfall, Excessive Snow Melt, Frozen Ground, Excess I/I and Under Capacity Sewer	12 hr, 3.9 mo to 12 hr, 4. 7 mo 1.47 to 1.56 inches Total Rainfall	Untreated Release	Little Calumet River
2-20-2014 to 2-21-2014 8:00 AM to 2:00 AM	5th Street Basin	MH 1230 on 5th St Interceptor Sewer	At Constructed Overflow out of 5th St San Swr into 5th St Stm Swr	125,341 gal	Rainstorm and Excessive Snow Melt Excessive I/I and Under Capacity Sewer	3 hr, <2.0 mo to 3 hr, 2.4 mo 0.75 to 0.90 inches Total Rainfall	Untreated Release	Little Calumet River
2-20-2014	5th Street Basin	2954 101st St	Basement Backup	<500 gal	Blockage in Public Sewer	N/A	Blockage Removed and Overflow Released Back to Sanitary Sewer	N/A

Town of Highland
Summary of Sanitary Sewer Overflows Reported in 2015

Date / Time	Drainage Basin Location	Location Description	Type of Overflow Event	Estimated Quantity of Overflow	Cause	Rainfall Event Classification	Comments	Receiving Waters
1-26-2015 to 1-27-2015 11:00 PM to 1:45 AM	5th Street Basin	2941 41st Street	Pipe Failure (41st Street Lift Station Force Main)	2,500 gal	Cast Iron Force Main Pipe Failed		Untreated Release	Cady Marsh Ditch
6-15-2015 to 6-16-2015 2:30 PM to 12:00 AM	5th Street Basin	MH's 1345 and 1230 all on 5th St Interceptor	At 2 Constructed Overflows out of 5th St San Swr into 5th St Stm Swr	1,456,470 gal	Rainfall, Excessive I/I, Under Capacity Sewer	10 day, 1.2 yr to 10 day, 2.9 yr (4.37 to 5.14 inches Rainfall)	Untreated Release	Little Calumet River
6-15-2015 to 6-16-2015 7:30 PM to 9:00 AM	5th Street Basin	MH 1098 on 5th St Interceptor	At 1 Constructed Overflow out of 5th St San Swr into 5th St Stm Swr	25,702 gal	Rainfall, Excessive I/I, Under Capacity Sewer	10 day, 1.2 yr to 10 day, 2.9 yr (4.37 to 5.14 inches Rainfall)	Untreated Release	Little Calumet River
6-15-2015 to 6-16-2015 4:45 PM to 2:00 AM	5th Street Basin	200 ft North of 41st Street in Highland Middle School Pkg Lot	Pipe Failure (41st Street Lift Station Force Main)	145,750 gal	Cast Iron Force Main Pipe Failed		Untreated Release	Cady Marsh Ditch
6-15-2015 to 6-16-2015 5:39 PM to 12:33 PM	5th Street Basin	150 ft North of Cady Marsh Ditch Along East Side of Bike Trail	Pipe Failure (41st Street Lift Station Force Main)	110,020 gal	Cast Iron Force Main Pipe Failed		Untreated Release	Cady Marsh Ditch
6-16-2015 11:55 AM to 12:33 PM	5th Street Basin	200 ft North of 41st Street in Highland Middle School Pkg Lot	Pipe Failure (41st Street Lift Station Force Main)	10,600 gal	Cast Iron Force Main Pipe Failed		Untreated Release	Cady Marsh Ditch
6-16-2015 12:34 PM to 3:15 PM	5th Street Basin	41st Street Lift Station	Bypass Pumping to Storm Sewer to Facilitate Repairs to Force Main	112,700 gal	Cast Iron Force Main Pipe Failed		Untreated Release	Cady Marsh Ditch
6-18-2015 3:28 AM to 9:58 AM	5th Street Basin	300 ft North of Cady Marsh Ditch Along East Side of Bike Trail	Pipe Failure (41st Street Lift Station Force Main)	27,865 gal	Cast Iron Force Main Pipe Failed		Untreated Release	Cady Marsh Ditch
9-12-2015 9:25 AM to 5:25 PM	5th Street Basin	MH 1230 on 5th St Interceptor	At 1 Constructed Overflow out of 5th St San Swr into 5th St Stm Swr	221,775 gal	Rainfall, Excessive I/I, Under Capacity Sewer	5 day, 6.6 mo. to 5 day, 3.7 yr (2.71 to 4.34 inches Rainfall)	Untreated Release	Little Calumet River
9-18-2015 to 9-19-2015 3:30 AM to 6:00 AM	5th Street Basin	MH 1098 on 5th St Interceptor	At 1 Constructed Overflow out of 5th St San Swr into 5th St Stm Swr	20,065 gal	Rainfall, Excessive I/I, Under Capacity Sewer	10 day, 7.3 mo. to 10 day, 6.8 yr (3.68 to 6.11 inches Rainfall)	Untreated Release	Little Calumet River
9-18-2015 to 9-19-2015 5:30 PM to 11:30 AM	5th Street Basin	MH 1230 on 5th St Interceptor	At 1 Constructed Overflow out of 5th St San Swr into 5th St Stm Swr	701,628 gal	Rainfall, Excessive I/I, Under Capacity Sewer	10 day, 7.3 mo. to 10 day, 6.8 yr (3.68 to 6.11 inches Rainfall)	Untreated Release	Little Calumet River
11-3-2015 to 11-4-2015 9:45 PM to 5:00 AM	5th Street Basin	41st Street and 5th Street Intersection	Pipe Failure (41st Street Lift Station Force Main)	3,250 gal	Cast Iron Force Main Pipe Failed		Untreated Release to Cady Marsh Ditch (Majority Re-Collected by Vactor Truck for Treatment)	
11-4-2015 6:00 AM to 11:00 AM	5th Street Basin	Along East Side of Bike Trail Behind 8938 O'Day Drive	Pipe Failure (41st Street Lift Station Force Main)	4,370 gal	Cast Iron Force Main Pipe Failed		Untreated Release to Land Near Cady Marsh Ditch (Majority Re-Collected by Vactor Truck for Treatment)	
12-28-2015 to 12-29-2015 4:07 PM to 6:00 AM	5th Street Basin	MH 1098 on 5th St Interceptor	At 1 Constructed Overflow out of 5th St San Swr into 5th St Stm Swr	23,731 gal	Rainfall and Snow Melt, Excessive I/I, Under Capacity Sewer	72 hr, 5.3 mo. to 72 hr, 9.5 mo. (2.24 to 2.75 inches Rainfall)	Untreated Release	Little Calumet River
12-28-2015 to 12-29-2015 4:07 PM to 6:00 PM	5th Street Basin	MH 1230 on 5th St Interceptor	At 1 Constructed Overflow out of 5th St San Swr into 5th St Stm Swr	1,745,370 gal	Rainfall and Snow Melt, Excessive I/I, Under Capacity Sewer	72 hr, 5.3 mo. to 72 hr, 9.5 mo. (2.24 to 2.75 inches Rainfall)	Untreated Release	Little Calumet River
12-28-2015 to 12-29-2015 8:15 PM to 5:15 AM	5th Street Basin	MH 1345 on 5th St Interceptor	At 1 Constructed Overflow out of 5th St San Swr into 5th St Stm Swr	41,763 gal	Rainfall and Snow Melt, Excessive I/I, Under Capacity Sewer	72 hr, 5.3 mo. to 72 hr, 9.5 mo. (2.24 to 2.75 inches Rainfall)	Untreated Release	Little Calumet River
12-29-2015 12:55 AM to 1:55 AM	5th Street Basin	MH 1001 on 5th St Interceptor	Bypass Pumping to Storm Sewer	234,000 gal	Rainfall and Snow Melt, Excessive I/I, Under Capacity Sewer	72 hr, 5.3 mo. to 72 hr, 9.5 mo. (2.24 to 2.75 inches Rainfall)	Untreated Release	Little Calumet River
12-29-2015 2:00 AM to 1:00 PM	5th Street Basin	MH 1039, Duluth Street and Grace Place	Bypass Pumping to Storm Sewer	198,000 gal	Rainfall and Snow Melt, Excessive I/I, Under Capacity Sewer	72 hr, 5.3 mo. to 72 hr, 9.5 mo. (2.24 to 2.75 inches Rainfall)	Untreated Release	Little Calumet River
12-29-2015 12:30 PM to 8:00 PM	5th Street Basin	Carolina Avenue and Lincoln Street Intersection	Pipe Failure (Grace Street Lift Station Force Main)	1,500 gal	Cast Iron Force Main Pipe Failed		Untreated Release	Little Calumet River

Town of Highland
Summary of Sanitary Sewer Overflows Reported in 2016

Date / Time	Drainage Basin Location	Location Description	Type of Overflow Event	Estimated Quantity of Overflow	Cause	Rainfall Event Classification	Comments	Receiving Waters
5-10-2016 4:15 PM to 5:15 PM	5th Street Basin	MH 1098 on 5th St Interceptor	At 1 Constructed Overflow out of 5th St San Swr into 5th St Stm Swr	1,701 gal	Rainfall, Excessive I/I, Under Capacity Sewer	5-min, 4.7 mo. to 5-min, 6.8 mo. (0.21 to 0.24 inches Rainfall)	Untreated Release	Little Calumet River
5-10-2016 5:00 PM to 8:00 PM	5th Street Basin	MH 1230 on 5th St Interceptor	At 1 Constructed Overflow out of 5th St San Swr into 5th St Stm Swr	30,634 gal	Rainfall, Excessive I/I, Under Capacity Sewer	5-min, 4.7 mo. to 5-min, 6.8 mo. (0.21 to 0.24 inches Rainfall)	Untreated Release	Little Calumet River
5-11-2016 2:00 AM to 2:30 AM	5th Street Basin	9202 Grace Place and 9207 Grace Street	Pipe Failure (Partial collapse of gravity sewer)	0 gal	VCP Gravity Sewer Pipe Failed		Minimal basement backup; drained back to system	None
7-18-2016 12:45 AM to 1:30 AM	5th Street Basin	MH 1098 on 5th St Interceptor	At 1 Constructed Overflow out of 5th St San Swr into 5th St Stm Swr	1,207 gal	Rainfall, Excessive I/I, Under Capacity Sewer	5-min, 3.5 yr. to 5-min, 4.6 yr. (0.39 to 0.42 inches Rainfall)	Untreated Release	Little Calumet River
7-18-2016 1:05 AM to 1:30 AM	5th Street Basin	MH 1230 on 5th St Interceptor	At 1 Constructed Overflow out of 5th St San Swr into 5th St Stm Swr	261 gal	Rainfall, Excessive I/I, Under Capacity Sewer	5-min, 3.5 yr. to 5-min, 4.6 yr. (0.39 to 0.42 inches Rainfall)	Untreated Release	Little Calumet River
7-21-2016 1:00 PM to 11:00 PM	5th Street Basin	MH 1098 on 5th St Interceptor	At 1 Constructed Overflow out of 5th St San Swr into 5th St Stm Swr	1,905 gal	Rainfall, Excessive I/I, Under Capacity Sewer	15-min, 6.4 mo. (0.54 in. Rain) @ 1:00 PM 15-min, 5.5 mo. (0.51 in. Rain) @ 10:30 PM	Untreated Release	Little Calumet River
7-23-2016 to 7-24-2016 11:00 PM to 9:00 PM	5th Street Basin	MH 1098 on 5th St Interceptor	At 1 Constructed Overflow out of 5th St San Swr into 5th St Stm Swr	22,372 gal	Rainfall, Excessive I/I, Under Capacity Sewer, 1 Pump out of Service at L.S.	1-hr, 1.7 yr. (1.29 in. Rain) @ 11:00 PM 7/23 10-min, 5.6 yr. (0.44 in. Rain) @ 8:00 PM 7/24	Untreated Release	Little Calumet River
7-23-2016 to 7-24-2016 11:30 PM to 10:30 PM	5th Street Basin	MH 1230 on 5th St Interceptor	At 1 Constructed Overflow out of 5th St San Swr into 5th St Stm Swr	207,976 gal	Rainfall, Excessive I/I, Under Capacity Sewer, 1 Pump out of Service at L.S.	1-hr, 1.7 yr. (1.29 in. Rain) @ 11:00 PM 7/23 10-min, 5.6 yr. (0.44 in. Rain) @ 8:00 PM 7/24	Untreated Release	Little Calumet River
7-29-2016 1:15 PM to 1:45 PM	5th Street Basin	MH 1098 on 5th St Interceptor	At 1 Constructed Overflow out of 5th St San Swr into 5th St Stm Swr	6,692 gal	Rainfall, Excessive I/I, Under Capacity Sewer	10-day, 3.6 yr. to 10-day 8.1 yr. (5.36 to 6.33 inches Rainfall)	Untreated Release	Little Calumet River
7-29-2016 1:45 PM to 6:00 PM	5th Street Basin	MH 1230 on 5th St Interceptor	At 1 Constructed Overflow out of 5th St San Swr into 5th St Stm Swr	191,092 gal	Rainfall, Excessive I/I, Under Capacity Sewer	10-day, 3.6 yr. to 10-day 8.1 yr. (5.36 to 6.33 inches Rainfall)	Untreated Release	Little Calumet River
10-31-2016 3:30 PM	81st Street Basin	9346 Waymond Avenue	Basement Backup	30 gal	Blockage of grease in sewer main caused backup into the basement		Minor basement backup; drained back to system	None
11-2-2016 7:15 PM to 11:45 PM	5th Street Basin	MH 1230 on 5th St Interceptor	At 1 Constructed Overflow out of 5th St San Swr into 5th St Stm Swr	266,970 gal	Rainfall, Excessive I/I, Under Capacity Sewer	2-hr, 4.9-mo. To 2-hr, 1.4-yr. (1.05 to 1.50 inches Rainfall)	Untreated Release	Little Calumet River
12-16-2016 1:00 PM to 3:00 PM	5th Street Basin	MH 4053 (Alley between Martha Street and 39th Street)	Manhole Overflow	50 gal	Blockage in sewer caused sewage to back up and come out of manhole		Sewer and ground were cleaned with Vac Truck	None

Town of Highland
Summary of Sanitary Sewer Overflows Reported in 2017

Date / Time	Drainage Basin Location	Location Description	Type of Overflow Event	Estimated Quantity of Overflow	Cause	Rainfall Event Classification	Comments	Receiving Waters
2-28-2017 4:00 AM to 6:00 AM	5th Street Basin	2944 Hess Drive	Basement Backup	0 gal	Sewer Pipe Damaged by Sewer Cleaning Contractor		Minimal basement backup; drained back to system	None
2-28-2017 to 3-1-2017 6:45 PM to 9:45 AM	5th Street Basin	MH 1098 on 5th St Interceptor	At 1 Constructed Overflow out of 5th St San Swr into 5th St Strn Swr	32,833 gal	Rainfall, Excessive I/I, Under Capacity Sewer	6-hr, 4.8 yr. (2.67 inches Rainfall)	Untreated Release	Little Calumet River
2-28-2017 to 3-1-2017 8:45 PM to 1:45 PM	5th Street Basin	MH 1230 on 5th St Interceptor	At 1 Constructed Overflow out of 5th St San Swr into 5th St Strn Swr	1,380,000 gal	Rainfall, Excessive I/I, Under Capacity Sewer	6-hr, 4.8 yr. (2.67 inches Rainfall)	Untreated Release	Little Calumet River
2-28-2017 to 3-1-2017 9:30 PM to 6:30 AM	5th Street Basin	MH 1345 on 5th St Interceptor	At 1 Constructed Overflow out of 5th St San Swr into 5th St Strn Swr	141,682 gal	Rainfall, Excessive I/I, Under Capacity Sewer	6-hr, 4.8 yr. (2.67 inches Rainfall)	Untreated Release	Little Calumet River
2-28-2017 to 3-1-2017 11:40 PM to 12:30 PM	5th Street Basin	MH 1039, Duluth Street and Grace Place	Bypass Pumping to Storm Sewer	1,155,000 gal	Rainfall, Excessive I/I, Under Capacity Sewer	6-hr, 4.8 yr. (2.67 inches Rainfall)	Untreated Release	Little Calumet River
2-28-2017 to 3-1-2017 11:41 PM to 2:31 AM	5th Street Basin	MH 1001 on 5th St Interceptor	Bypass Pumping to Storm Sewer	691,478 gal	Rainfall, Excessive I/I, Under Capacity Sewer	6-hr, 4.8 yr. (2.67 inches Rainfall)	Untreated Release	Little Calumet River
3-30-2017 8:00 AM to 8:00 PM	5th Street Basin	MH 1039, Duluth Street and Grace Place	Bypass Pumping to Storm Sewer	1,080,000 gal	Rainfall, Excessive I/I, Under Capacity Sewer	18-hr, 6.7 mo. (1.90 inches Rainfall)	Untreated Release	Little Calumet River
3-30-2017 8:00 AM to 11:00 PM	5th Street Basin	MH 1230 on 5th St Interceptor	At 1 Constructed Overflow out of 5th St San Swr into 5th St Strn Swr	2,256,320 gal	Rainfall, Excessive I/I, Under Capacity Sewer	18-hr, 6.7 mo. (1.90 inches Rainfall)	Untreated Release	Little Calumet River
3-30-2017 11:00 AM to 11:00 PM	5th Street Basin	MH 1098 on 5th St Interceptor	At 1 Constructed Overflow out of 5th St San Swr into 5th St Strn Swr	13,751 gal	Rainfall, Excessive I/I, Under Capacity Sewer	18-hr, 6.7 mo. (1.90 inches Rainfall)	Untreated Release	Little Calumet River
3-30-2017 2:00 PM to 10:00 PM	5th Street Basin	MH 1345 on 5th St Interceptor	At 1 Constructed Overflow out of 5th St San Swr into 5th St Strn Swr	231,652 gal	Rainfall, Excessive I/I, Under Capacity Sewer	18-hr, 6.7 mo. (1.90 inches Rainfall)	Untreated Release	Little Calumet River
4-5-2017 to 4-6-2017 10:30 PM to 4:30 PM	5th Street Basin	MH 1230 on 5th St Interceptor	At 1 Constructed Overflow out of 5th St San Swr into 5th St Strn Swr	2,634,280 gal	Rainfall, Excessive I/I, Under Capacity Sewer	10-day, 9.8 mo. (3.98 inches Rainfall)	Untreated Release	Little Calumet River
4-6-2017 3:00 AM to 11:00 AM	5th Street Basin	MH 1098 on 5th St Interceptor	At 1 Constructed Overflow out of 5th St San Swr into 5th St Strn Swr	360 gal	Rainfall, Excessive I/I, Under Capacity Sewer	10-day, 9.8 mo. (3.98 inches Rainfall)	Untreated Release	Little Calumet River
4-6-2017 6:00 AM to 10:15 AM	5th Street Basin	MH 1345 on 5th St Interceptor	At 1 Constructed Overflow out of 5th St San Swr into 5th St Strn Swr	138,702 gal	Rainfall, Excessive I/I, Under Capacity Sewer	10-day, 9.8 mo. (3.98 inches Rainfall)	Untreated Release	Little Calumet River
4-27-2017 2:00 PM	5th Street Basin	8001 Kennedy Avenue, South of Little Calumet River Levee	Pipe Failure (5th St Lift Station Force Main)	0 gal	N 5th St Force Main Pipe Failed		Sinkhole over pipe; sewage drained back to system	None
5-2-2017 2:15 PM to 3:15 PM	5th Street Basin	MH 1098 on 5th St Interceptor	At 1 Constructed Overflow out of 5th St San Swr into 5th St Strn Swr	24 gal	5th St Lift Station Shut Down for Repair of 5th St Force Main Break		Untreated Release	Little Calumet River
5-2-2017 2:15 PM to 3:30 PM	5th Street Basin	MH 1230 on 5th St Interceptor	At 1 Constructed Overflow out of 5th St San Swr into 5th St Strn Swr	3,896 gal	5th St Lift Station Shut Down for Repair of 5th St Force Main Break		Untreated Release	Little Calumet River
5-5-2017 1:45 PM to 2:15 PM	5th Street Basin	MH 1230 on 5th St Interceptor	At 1 Constructed Overflow out of 5th St San Swr into 5th St Strn Swr	61 gal	5th St Lift Station Shut Down for Repair of 5th St Force Main Break		Untreated Release	Little Calumet River
5-9-2017 11:10 AM to 11:15 AM	5th Street Basin	3325 Wirth Road	Basement Backup	0 gal	Grace St Force Main Pipe Failed; Backup While Pumping to San MH		Minimal basement backup; drained back to system	None
5-9-2017 11:10 AM to 11:15 AM	5th Street Basin	3326 Wirth Road	Basement Backup	0 gal	Grace St Force Main Pipe Failed; Backup While Pumping to San MH		Minimal basement backup; drained back to system	None

5-9-2017 11:10 AM to 11:15 AM	5th Street Basin	3331 Wirth Road	Basement Backup	0 gal	Grace St Force Main Pipe Failed; Backup While Pumping to San MH		Minimal basement backup; drained back to system	None
5-9-2017 3:20 PM to 8:00 PM	5th Street Basin	8900 Grace Street, at Grace St Lift Station	Bypass Pumping to Waterway	137,200 gal	Grace St Force Main Pipe Failed		Untreated Release	Cady Marsh Ditch
5-10-2017 to 5-11-2017 10:00 PM to 3:00 AM	5th Street Basin	MH 1230 on 5th St Interceptor	At 1 Constructed Overflow out of 5th St San Swr into 5th St Stm Swr	94,670 gal	Rainfall, Excessive I/I, Under Capacity Sewer	3-hr, 5.3 mo. (1.20 inches Rainfall)	Untreated Release	Little Calumet River
7-22-2017 12:00 AM to 3:00 AM	5th Street Basin	MH 1230 on 5th St Interceptor	At 1 Constructed Overflow out of 5th St San Swr into 5th St Stm Swr	6,211 gal	Rainfall, Excessive I/I, Under Capacity Sewer	72-hr, 1.7 yr. to 3.1 yr. (3.31 to 3.72 inches Rainfall)	Untreated Release	Little Calumet River
10-14-2017 to 10-15-2017 9:15 PM to 12:15 AM	5th Street Basin	MH 1230 on 5th St Interceptor	At 1 Constructed Overflow out of 5th St San Swr into 5th St Stm Swr	35,656 gal	Rainfall, Excessive I/I, Under Capacity Sewer	18-hr, 7.1 mo. to 4.9 yr. (1.93 to 3.36 inches Rainfall)	Untreated Release	Little Calumet River
10-23-2017 7:00 AM to 10:00 PM	5th Street Basin	MH 1230 on 5th St Interceptor	At 1 Constructed Overflow out of 5th St San Swr into 5th St Stm Swr	451,021 gal	Rainfall, Excessive I/I, Under Capacity Sewer	18-hr, 1.4 yr.; or 10-day, 7.6 yr. (2.45 inches Rainfall; or 6.25 inches Rainfall)	Untreated Release	Little Calumet River
10-23-2017 7:45 AM to 2:45 PM	5th Street Basin	MH 1098 on 5th St Interceptor	At 1 Constructed Overflow out of 5th St San Swr into 5th St Stm Swr	11,185 gal	Rainfall, Excessive I/I, Under Capacity Sewer	18-hr, 1.4 yr.; or 10-day, 7.6 yr. (2.45 inches Rainfall; or 6.25 inches Rainfall)	Untreated Release	Little Calumet River
10-23-2017 1:00 PM to 3:00 PM	5th Street Basin	MH 1345 on 5th St Interceptor	At 1 Constructed Overflow out of 5th St San Swr into 5th St Stm Swr	5,931 gal	Rainfall, Excessive I/I, Under Capacity Sewer	18-hr, 1.4 yr.; or 10-day, 7.6 yr. (2.45 inches Rainfall; or 6.25 inches Rainfall)	Untreated Release	Little Calumet River
10-23-2017 1:00 PM to 8:00 PM	5th Street Basin	MH 1039, Duluth Street and Grace Place	Bypass Pumping to Storm Sewer	630,000 gal	Rainfall, Excessive I/I, Under Capacity Sewer	18-hr, 1.4 yr.; or 10-day, 7.6 yr. (2.45 inches Rainfall; or 6.25 inches Rainfall)	Untreated Release	Little Calumet River
10-23-2017 1:44 PM to 4:14 PM	5th Street Basin	MH 1001 on 5th St Interceptor	Bypass Pumping to Storm Sewer	605,158 gal	Rainfall, Excessive I/I, Under Capacity Sewer	18-hr, 1.4 yr.; or 10-day, 7.6 yr. (2.45 inches Rainfall; or 6.25 inches Rainfall)	Untreated Release	Little Calumet River
11-18-2017 10:45 AM to 4:45 PM	5th Street Basin	MH 1230 on 5th St Interceptor	At 1 Constructed Overflow out of 5th St San Swr into 5th St Stm Swr	120,158 gal	Rainfall, Excessive I/I, Under Capacity Sewer	24-hr, 4.7 mo. (1.79 inches Rainfall)	Untreated Release	Little Calumet River
11-18-2017 1:52 PM to 4:58 PM	5th Street Basin	MH 1039, Duluth Street and Grace Place	Bypass Pumping to Storm Sewer	279,000 gal	Rainfall, Excessive I/I, Under Capacity Sewer	24-hr, 4.7 mo. (1.79 inches Rainfall)	Untreated Release	Little Calumet River

Town of Highland
Summary of Sanitary Sewer Overflows Reported in 2018

Date / Time	Drainage Basin Location	Location Description	Type of Overflow Event	Estimated Quantity of Overflow	Cause	Rainfall Event Classification	Comments	Receiving Waters
1-30-2018 8:00 AM to 2:15 PM	5th Street Basin	Across from 3022 Lincoln Street	Pipe Failure (Grace Street Lift Station Force Main)	65 gal	Grace St Force Main Pipe Failed		Untreated Release	Cady Marsh Ditch
2-19-2018 to 2-22-2018 10:00 PM to 2:00 AM	5th Street Basin	MH 1230 on 5th St Interceptor	At 1 Constructed Overflow out of 5th St San Swr into 5th St Stm Swr	2,254,970 gal	Rainfall, Excessive I/I, Under Capacity Sewer	48-hr, 2.5 yr.+ (3.50 inches Rainfall) + Significant Snow Melt	Untreated Release	Little Calumet River
2-19-2018 to 2-20-2018 11:30 PM to 12:30 AM	5th Street Basin	MH 1098 on 5th St Interceptor	At 1 Constructed Overflow out of 5th St San Swr into 5th St Stm Swr	5,746 gal	Rainfall, Excessive I/I, Under Capacity Sewer	48-hr, 2.5 yr.+ (3.50 inches Rainfall) + Significant Snow Melt	Untreated Release	Little Calumet River
2-19-2018 to 2-21-2018 11:30 PM to 6:00 PM	5th Street Basin	MH 1345 on 5th St Interceptor	At 1 Constructed Overflow out of 5th St San Swr into 5th St Stm Swr	3,467,198 gal	Rainfall, Excessive I/I, Under Capacity Sewer	48-hr, 2.5 yr.+ (3.50 inches Rainfall) + Significant Snow Melt	Untreated Release	Little Calumet River
2-19-2018 to 3-1-2017 11:50 PM to 10:45 AM	5th Street Basin	MH 1001 on 5th St Interceptor	Bypass Pumping to Storm Sewer	6,765,888 gal	Rainfall, Excessive I/I, Under Capacity Sewer	48-hr, 2.5 yr.+ (3.50 inches Rainfall) + Significant Snow Melt	Untreated Release	Little Calumet River
2-20-2018 to 2-22-2018 12:00 AM to 3:10 PM	5th Street Basin	MH 1039, Duluth Street and Grace Place	Bypass Pumping to Storm Sewer	3,525,000 gal	Rainfall, Excessive I/I, Under Capacity Sewer	48-hr, 2.5 yr.+ (3.50 inches Rainfall) + Significant Snow Melt	Untreated Release	Little Calumet River
2-20-2018 to 2-21-2018 5:42 AM to 7:44 AM	5th Street Basin	MH 4001 (41st Street Lift Station)	Bypass Pumping to Storm Sewer	1,614,740 gal	Rainfall, Excessive I/I, Under Capacity Sewer	48-hr, 2.5 yr.+ (3.50 inches Rainfall) + Significant Snow Melt	Untreated Release	Little Calumet River
4-15-2018 10:00 AM to 10:30 AM	5th Street Basin	MH 1230 on 5th St Interceptor	At 1 Constructed Overflow out of 5th St San Swr into 5th St Stm Swr	446 gal	Pump Failure at N. 5th St Pump Station		Untreated Release	Little Calumet River
5-19-2018 8:30 AM to 10:00 AM	5th Street Basin	9031 Liable Road	Basement Backup	0 gal	Blocked Sanitary Sewer Line		Removed blockage and sewage drained to sewer	None
5-19-2018 9:30 AM to 10:00 AM	5th Street Basin	3541 Laverne Drive	Basement Backup	0 gal	Blocked Sanitary Sewer Line		Removed blockage and sewage drained to sewer	None
7-4-2018 to 7-5-2018 9:45 PM to 3:30 AM	5th Street Basin	MH 1230 on 5th St Interceptor	At 1 Constructed Overflow out of 5th St San Swr into 5th St Stm Swr	237,104 gal	Rainfall, Excessive I/I, Under Capacity Sewer	3-hr, 4.5 yr. (2.23 inches Rainfall)	Untreated Release	Little Calumet River
7-4-2018 10:15 PM to 11:45 PM	5th Street Basin	MH 1345 on 5th St Interceptor	At 1 Constructed Overflow out of 5th St San Swr into 5th St Stm Swr	14,257 gal	Rainfall, Excessive I/I, Under Capacity Sewer	3-hr, 4.5 yr. (2.23 inches Rainfall)	Untreated Release	Little Calumet River
7-5-2018 to 7-6-2018 3:15 PM to 1:45 AM	5th Street Basin	MH 1230 on 5th St Interceptor	At 1 Constructed Overflow out of 5th St San Swr into 5th St Stm Swr	472,913 gal	Rainfall, Excessive I/I, Under Capacity Sewer	24-hr, 5.7 yr. (3.70 inches Rainfall)	Untreated Release	Little Calumet River
7-5-2018 3:30 PM to 10:45 PM	5th Street Basin	MH 1345 on 5th St Interceptor	At 1 Constructed Overflow out of 5th St San Swr into 5th St Stm Swr	200,465 gal	Rainfall, Excessive I/I, Under Capacity Sewer	24-hr, 5.7 yr. (3.70 inches Rainfall)	Untreated Release	Little Calumet River
7-5-2018 to 7-6-2018 6:12 PM to 12:28 AM	5th Street Basin	MH 1039, Duluth Street and Grace Place	Bypass Pumping to Storm Sewer	169,200 gal	Rainfall, Excessive I/I, Under Capacity Sewer	24-hr, 5.7 yr. (3.70 inches Rainfall)	Untreated Release	Little Calumet River
7-16-2018 2:00 PM to 4:45 PM	5th Street Basin	MH 1345 on 5th St Interceptor	At 1 Constructed Overflow out of 5th St San Swr into 5th St Stm Swr	110,128 gal	Rainfall, Excessive I/I, Under Capacity Sewer	1-hr, 19.3 yr. (2.27 inches Rainfall)	Untreated Release	Little Calumet River
7-16-2018 2:30 PM to 8:15 PM	5th Street Basin	MH 1230 on 5th St Interceptor	At 1 Constructed Overflow out of 5th St San Swr into 5th St Stm Swr	253,145 gal	Rainfall, Excessive I/I, Under Capacity Sewer	1-hr, 19.3 yr. (2.27 inches Rainfall)	Untreated Release	Little Calumet River
7-16-2018 4:28 PM to 10:10 PM	5th Street Basin	MH 1039, Duluth Street and Grace Place	Bypass Pumping to Storm Sewer	153,900 gal	Rainfall, Excessive I/I, Under Capacity Sewer	1-hr, 19.3 yr. (2.27 inches Rainfall)	Untreated Release	Little Calumet River
8-20-2018 9:15 PM to 11:45 PM	5th Street Basin	MH 1230 on 5th St Interceptor	At 1 Constructed Overflow out of 5th St San Swr into 5th St Stm Swr	67,536 gal	Rainfall, Excessive I/I, Under Capacity Sewer	1-hr, 3.0 yr. (1.47 inches Rainfall)	Untreated Release	Little Calumet River

11-26-2018 2:00 AM to 8:00 AM	5th Street Basin	MH 1230 on 5th St Interceptor	At 1 Constructed Overflow out of 5th St San Swr into 5th St Stm Swr	50,502 gal	Rainfall, Excessive I/I, Under Capacity Sewer	12-hr, 5.4 mo. (1.64 inches Rainfall)	Untreated Release	Little Calumet River
11-26-2018 7:00 PM to 9:00 PM	5th Street Basin	3740 41st Lane	Basement Backup	<100 gal	Blocked Sanitary Sewer Line		Removed blockage and sewage drained to sewer	None
11-26-2018 7:00 PM to 9:00 PM	5th Street Basin	3743 41st Lane	Basement Backup	<100 gal	Blocked Sanitary Sewer Line		Removed blockage and sewage drained to sewer	None
11-26-2018 7:00 PM to 9:00 PM	5th Street Basin	9336 Kleinman Road	Basement Backup	<100 gal	Blocked Sanitary Sewer Line		Removed blockage and sewage drained to sewer	None

Town of Highland
Summary of Sanitary Sewer Overflows Reported in 2019

Date / Time	Drainage Basin Location	Location Description	Type of Overflow Event	Estimated Quantity of Overflow	Cause	Rainfall Event Classification	Comments	Receiving Waters
3-30-2019 10:00 AM to 11:30 AM	5th Street Basin	9631 5th Place	Basement Backup	<100 gal	Blocked Sanitary Sewer Line		Removed blockage and sewage drained to sewer	None
4-18-2019 12:30 PM to 8:45 PM	5th Street Basin	MH 1230 on 5th St Interceptor	At 1 Constructed Overflow out of 5th St San Swr into 5th St Stm Swr	105,403 gal	Rainfall, Excessive I/I, Under Capacity Sewer	10-day, 7.7 month (3.68 inches Rainfall)	Untreated Release	Little Calumet River
4-29-2019 10:00 AM to 11:45 PM	5th Street Basin	MH 1230 on 5th St Interceptor	At 1 Constructed Overflow out of 5th St San Swr into 5th St Stm Swr	526,978 gal	Rainfall, Excessive I/I, Under Capacity Sewer	48-hr, 7.8 month (2.31 inches Rainfall)	Untreated Release	Little Calumet River
4-29-2019 11:45 AM to 5:15 PM	5th Street Basin	MH 1345 on 5th St Interceptor	At 1 Constructed Overflow out of 5th St San Swr into 5th St Stm Swr	126,286 gal	Rainfall, Excessive I/I, Under Capacity Sewer	48-hr, 7.8 month (2.31 inches Rainfall)	Untreated Release	Little Calumet River
4-29-2019 12:15 PM to 7:30 PM	5th Street Basin	MH 1039, Duluth Street and Grace Place	Bypass Pumping to Storm Sewer	195,750 gal	Rainfall, Excessive I/I, Under Capacity Sewer	48-hr, 7.8 month (2.31 inches Rainfall)	Untreated Release	Little Calumet River
4-30-2019 to 5-2-2019 4:15 PM to 1:15 AM	5th Street Basin	MH 1230 on 5th St Interceptor	At 1 Constructed Overflow out of 5th St San Swr into 5th St Stm Swr	1,661,860 gal	Rainfall, Excessive I/I, Under Capacity Sewer	5-day, 4.4 yr. (4.54 inches Rainfall)	Untreated Release	Little Calumet River
4-30-2019 to 5-1-2019 5:00 PM to 9:00 PM	5th Street Basin	MH 1345 on 5th St Interceptor	At 1 Constructed Overflow out of 5th St San Swr into 5th St Stm Swr	2,854,310 gal	Rainfall, Excessive I/I, Under Capacity Sewer	5-day, 4.4 yr. (4.54 inches Rainfall)	Untreated Release	Little Calumet River
4-30-2019 to 5-1-2019 4:35 PM to 1:20 PM	5th Street Basin	MH 1039, Duluth Street and Grace Place	Bypass Pumping to Storm Sewer	374,700 gal	Rainfall, Excessive I/I, Under Capacity Sewer	5-day, 4.4 yr. (4.54 inches Rainfall)	Untreated Release	Little Calumet River
5-1-2019 4:09 AM to 8:09 AM	5th Street Basin	MH 1001 on 5th St Interceptor	Bypass Pumping to Storm Sewer	863,827 gal	Rainfall, Excessive I/I, Under Capacity Sewer	5-day, 4.4 yr. (4.54 inches Rainfall)	Untreated Release	Little Calumet River
5-1-2019 5:26 AM to 12:22 PM	5th Street Basin	MH 4001 (41st Street Lift Station)	Bypass Pumping to Storm Sewer	380,005 gal	Rainfall, Excessive I/I, Under Capacity Sewer	5-day, 4.4 yr. (4.54 inches Rainfall)	Untreated Release	Cady Marsh Ditch
5-27-2019 5:15 PM to 11:45 PM	5th Street Basin	MH 1230 on 5th St Interceptor	At 1 Constructed Overflow out of 5th St San Swr into 5th St Stm Swr	253,551 gal	Rainfall, Excessive I/I, Under Capacity Sewer	15-min, 3.1 yr. (1.67 inches Rainfall)	Untreated Release	Little Calumet River
5-27-2019 5:30 PM to 9:45 PM	5th Street Basin	MH 1345 on 5th St Interceptor	At 1 Constructed Overflow out of 5th St San Swr into 5th St Stm Swr	54,300 gal	Rainfall, Excessive I/I, Under Capacity Sewer	15-min, 3.1 yr. (1.67 inches Rainfall)	Untreated Release	Little Calumet River
5-28-2019 to 5-29-2019 10:50 PM to 4:30 PM	5th Street Basin	MH 1230 on 5th St Interceptor	At 1 Constructed Overflow out of 5th St San Swr into 5th St Stm Swr	718,615 gal	Rainfall, Excessive I/I, Under Capacity Sewer	36-hr, 1.9 yr. (2.95 inches Rainfall)	Untreated Release	Little Calumet River
5-28-2019 to 5-29-2019 11:45 PM to 10:30 AM	5th Street Basin	MH 1345 on 5th St Interceptor	At 1 Constructed Overflow out of 5th St San Swr into 5th St Stm Swr	357,796 gal	Rainfall, Excessive I/I, Under Capacity Sewer	36-hr, 1.9 yr. (2.95 inches Rainfall)	Untreated Release	Little Calumet River
6-19-2019 6:13 AM to 11:19 PM	5th Street Basin	Along East Side of Bike Trail Behind 8934 O'Day Drive	Pipe Failure (41st Street Lift Station Force Main)	157,889 gal * *(net 66,372 gal)	Cast Iron Force Main Pipe Failed		Untreated Release to Land Near Cady Marsh Ditch (91,517 gal captured for treatment, 66,372 released)	
6-26-2019 to 6-27-2019 9:45 PM to 10:45 AM	5th Street Basin	MH 1230 on 5th St Interceptor	At 1 Constructed Overflow out of 5th St San Swr into 5th St Stm Swr	468,703 gal	Rainfall, Excessive I/I, Under Capacity Sewer	30-min, 5.0 yr. (1.34 inches Rainfall)	Untreated Release	Little Calumet River
7-21-2019 3:15 PM to 5:45 PM	5th Street Basin	MH 1230 on 5th St Interceptor	At 1 Constructed Overflow out of 5th St San Swr into 5th St Stm Swr	66,451 gal	Rainfall, Excessive I/I, Under Capacity Sewer	1-hr, 1.2 yr. (1.18 inches Rainfall)	Untreated Release	Little Calumet River
9-27-2019 to 9-29-2019 7:00 PM to 9:00 PM	5th Street Basin	MH 1230 on 5th St Interceptor	At 1 Constructed Overflow out of 5th St San Swr into 5th St Stm Swr	2,805,980 gal	Rainfall, Excessive I/I, Under Capacity Sewer	48-hr, 31.3 yr. (5.82 inches Rainfall)	Untreated Release	Little Calumet River
9-27-2019 to 9-29-2019 8:30 PM to 3:00 PM	5th Street Basin	MH 1345 on 5th St Interceptor	At 1 Constructed Overflow out of 5th St San Swr into 5th St Stm Swr	2,751,180 gal	Rainfall, Excessive I/I, Under Capacity Sewer	48-hr, 31.3 yr. (5.82 inches Rainfall)	Untreated Release	Little Calumet River

9-27-2019 to 9-28-2019 8:00 PM to 12:30 PM	5th Street Basin	MH 1039, Duluth Street and Grace Place	Bypass Pumping to Storm Sewer	448,200 gal	Rainfall, Excessive I/I, Under Capacity Sewer	48-hr, 31.3 yr. (5.82 inches Rainfall)	Untreated Release	Little Calumet River
9-27-2019 to 9-29-2019 9:05 PM to 10:35 AM	5th Street Basin	MH 1001 on 5th St Interceptor	Bypass Pumping to Storm Sewer	3,115,017 gal	Rainfall, Excessive I/I, Under Capacity Sewer	48-hr, 31.3 yr. (5.82 inches Rainfall)	Untreated Release	Little Calumet River
9-28-2019 12:15 AM to 8:15 AM	5th Street Basin	MH 4001 (41st Street Lift Station)	Bypass Pumping to Storm Sewer	516,000 gal	Rainfall, Excessive I/I, Under Capacity Sewer	48-hr, 31.3 yr. (5.82 inches Rainfall)	Untreated Release	Cady Marsh Ditch
10-26-2019 to 10-27-2019 6:45 PM to 3:45 AM	5th Street Basin	MH 1230 on 5th St Interceptor	At 1 Constructed Overflow out of 5th St San Swr into 5th St Stm Swr	555,854 gal	Rainfall, Excessive I/I, Under Capacity Sewer	12-hr, 1.2 yr. (2.20 inches Rainfall)	Untreated Release	Little Calumet River

Town of Highland
Summary of Sanitary Sewer Overflows Reported in 2020

Date / Time	Drainage Basin Location	Location Description	Type of Overflow Event	Estimated Quantity of Overflow	Cause	Rainfall Event Classification	Comments	Receiving Waters
1-10-2020 11:30 PM to 1-11-2020 11:59 PM	5th Street Basin	MH 1230 on 5th St Interceptor	At 1 Constructed Overflow out of 5th St San Swr into 5th St Stm Swr	2,357,418 gal	Rainfall, Excessive I/I, Under Capacity Sewer	12-hr, 1.4 yr. (2.27 inches Rainfall)	Untreated Release	Little Calumet River
1-11-2020 1:55 AM to 1-11-2020 5:29 PM	5th Street Basin	MH 1345 on 5th St Interceptor	At 1 Constructed Overflow out of 5th St San Swr into 5th St Stm Swr	879,781 gal	Rainfall, Excessive I/I, Under Capacity Sewer	12-hr, 1.4 yr. (2.27 inches Rainfall)	Untreated Release	Little Calumet River
1-11-2020 2:50 AM to 1-11-2020 7:35 AM	5th Street Basin	MH 1039, Duluth Street and Grace Place	Bypass Pumping to Storm Sewer	137,325 gal	Rainfall, Excessive I/I, Under Capacity Sewer	12-hr, 1.4 yr. (2.27 inches Rainfall)	Untreated Release	Little Calumet River
1-11-2020 4:45 AM to 1-11-2020 10:15 AM	5th Street Basin	MH 1001 on 5th St Interceptor	Bypass Pumping to Storm Sewer	1,255,308 gal	Rainfall, Excessive I/I, Under Capacity Sewer	12-hr, 1.4 yr. (2.27 inches Rainfall)	Untreated Release	Little Calumet River
4-1-2020 3:30 PM to 4-1-2020 5:15 PM	5th Street Basin	3134 44th Street	Basement Backup	<100 gal	Blocked Sanitary Sewer Line		Removed blockage and sewage drained to sewer	None
4-7-2020 2:39 AM to 4-7-2020 5:48 AM	5th Street Basin	MH 1230 on 5th St Interceptor	At 1 Constructed Overflow out of 5th St San Swr into 5th St Stm Swr	72,315 gal	Rainfall, Excessive I/I, Under Capacity Sewer	3-hr, 1.2 yr. (1.62 inches Rainfall)	Untreated Release	Little Calumet River
4-25-2020 11:38 PM to 4-26-2020 12:11 AM	5th Street Basin	MH 1230 on 5th St Interceptor	At 1 Constructed Overflow out of 5th St San Swr into 5th St Stm Swr	224 gal	Rainfall, Excessive I/I, Under Capacity Sewer	18-hr, 2.3 mo. (1.30 inches Rainfall)	Untreated Release	Little Calumet River
4-29-2020 4:00 PM to 4-30-2020 1:00 PM	5th Street Basin	MH 1345 on 5th St Interceptor	At 1 Constructed Overflow out of 5th St San Swr into 5th St Stm Swr	1,204,358 gal	Rainfall, Excessive I/I, Under Capacity Sewer	5-day, 2.8 yr. (4.08 inches Rainfall)	Untreated Release	Little Calumet River
4-29-2020 9:31 PM to 4-30-2020 8:45 PM	5th Street Basin	MH 1230 on 5th St Interceptor	At 1 Constructed Overflow out of 5th St San Swr into 5th St Stm Swr	4,469,256 gal	Rainfall, Excessive I/I, Under Capacity Sewer	5-day, 2.8 yr. (4.08 inches Rainfall)	Untreated Release	Little Calumet River
4-29-2020 10:05 PM to 4-30-2020 3:55 AM	5th Street Basin	MH 1039, Duluth Street and Grace Place	Bypass Pumping to Storm Sewer	127,750 gal	Rainfall, Excessive I/I, Under Capacity Sewer	5-day, 2.8 yr. (4.08 inches Rainfall)	Untreated Release	Little Calumet River
5-15-2020 1:05 AM to 5-15-2020 5:50 PM	5th Street Basin	MH 1230 on 5th St Interceptor	At 1 Constructed Overflow out of 5th St San Swr into 5th St Stm Swr	2,003,730 gal	Rainfall, Excessive I/I, Under Capacity Sewer	24-hr, 1.3 yr. (2.54 inches Rainfall)	Untreated Release	Little Calumet River
5-15-2020 2:42 AM to 5-15-2020 11:51 AM	5th Street Basin	MH 1345 on 5th St Interceptor	At 1 Constructed Overflow out of 5th St San Swr into 5th St Stm Swr	15,961 gal	Rainfall, Excessive I/I, Under Capacity Sewer	24-hr, 1.3 yr. (2.54 inches Rainfall)	Untreated Release	Little Calumet River
5-15-2020 3:20 AM to 5-15-2020 6:30 AM	5th Street Basin	MH 1039, Duluth Street and Grace Place	Bypass Pumping to Storm Sewer	102,600 gal	Rainfall, Excessive I/I, Under Capacity Sewer	24-hr, 1.3 yr. (2.54 inches Rainfall)	Untreated Release	Little Calumet River
5-17-2020 3:50 PM to 5-18-2020 11:30 PM	5th Street Basin	MH 1230 on 5th St Interceptor	At 1 Constructed Overflow out of 5th St San Swr into 5th St Stm Swr	3,615,657 gal	Rainfall, Excessive I/I, Under Capacity Sewer	4-day, 16.3 yr. (5.75 inches Rainfall)	Untreated Release	Little Calumet River
5-17-2020 7:53 PM to 5-18-2020 5:31 PM	5th Street Basin	MH 1345 on 5th St Interceptor	At 1 Constructed Overflow out of 5th St San Swr into 5th St Stm Swr	3,043,045 gal	Rainfall, Excessive I/I, Under Capacity Sewer	4-day, 16.3 yr. (5.75 inches Rainfall)	Untreated Release	Little Calumet River
5-17-2020 8:53 PM to 5-18-2020 11:50 AM	5th Street Basin	MH 1001 on 5th St Interceptor	Bypass Pumping to Storm Sewer	3,162,637 gal	Rainfall, Excessive I/I, Under Capacity Sewer	4-day, 16.3 yr. (5.75 inches Rainfall)	Untreated Release	Little Calumet River
5-17-2020 9:30 PM to 5-18-2020 10:30 AM	5th Street Basin	MH 4001 (41st Street Lift Station)	Bypass Pumping to Storm Sewer	785,081 gal	Rainfall, Excessive I/I, Under Capacity Sewer	4-day, 16.3 yr. (5.75 inches Rainfall)	Untreated Release	Cady Marsh Ditch
5-17-2020 9:45 PM to 5-18-2020 9:10 AM	5th Street Basin	MH 1039, Duluth Street and Grace Place	Bypass Pumping to Storm Sewer	326,745 gal	Rainfall, Excessive I/I, Under Capacity Sewer	4-day, 16.3 yr. (5.75 inches Rainfall)	Untreated Release	Little Calumet River

Date / Time	Drainage Basin Location	Location Description	Type of Overflow Event	Estimated Quantity of Overflow	Cause	Rainfall Event Classification	Comments	Receiving Waters
5-17-2020 9:00 PM (estimated start) 5-17-2020 and 5-18-2020 (reports made to Town)	5th Street Basin	2814, 2819, 2918, 3235 & 3315 Strong Street 3133 Glenwood Avenue 3108 Maple Drive 2839 Condit Street 2828 & 3217 Duluth Street 3509 Duluth Place 3036 Grand Boulevard	Basement Backups (12 Locations) (via. Basement Floor Drain, Shower Stall, Toilet, Uncapped Former Sump Pump Pipe, Cracked Laundry Tub Pipe, and/or Sink)	Ea. <100 gal	Rainfall, Excessive I/I, Under Capacity Sewer. Also, Check Valves at MH 1230 Overflow and MH 1345 Overflow Closed 8:20 PM – 9:15 PM and 8:39 PM – 8:44 PM, Respectively, Due to Storm Sewer Surcharge Level Higher Than Sanitary Sewer Surcharge Level	4-day, 16.3 yr. (5.75 inches Rainfall)	Sewage cleaned up or drained to sewer	None
5-23-2020 5:10 PM to 5-24-2020 7:20 AM	5th Street Basin	MH 1230 on 5th St Interceptor	At 1 Constructed Overflow out of 5th St San Swr into 5th St Stm Swr	1,876,978 gal	Rainfall, Excessive I/I, Under Capacity Sewer	45-min, 61.9 yr. (2.66 inches Rainfall) or, 10-day, 12.4 yr. (6.89 inches Rainfall)	Untreated Release	Little Calumet River
5-23-2020 5:30 PM to 5-23-2020 10:10 PM	5th Street Basin	MH 1001 on 5th St Interceptor	Bypass Pumping to Storm Sewer	1,108,556 gal	Rainfall, Excessive I/I, Under Capacity Sewer	45-min, 61.9 yr. (2.66 inches Rainfall) or, 10-day, 12.4 yr. (6.89 inches Rainfall)	Untreated Release	Little Calumet River
5-23-2020 5:58 PM to 5-23-2020 9:33 PM	5th Street Basin	MH 1345 on 5th St Interceptor	At 1 Constructed Overflow out of 5th St San Swr into 5th St Stm Swr	15,882 gal	Rainfall, Excessive I/I, Under Capacity Sewer	45-min, 61.9 yr. (2.66 inches Rainfall) or, 10-day, 12.4 yr. (6.89 inches Rainfall)	Untreated Release	Little Calumet River
5-23-2020 7:00 PM to 5-23-2020 11:15 PM	5th Street Basin	MH 1039, Duluth Street and Grace Place	Bypass Pumping to Storm Sewer	93,075 gal	Rainfall, Excessive I/I, Under Capacity Sewer	45-min, 61.9 yr. (2.66 inches Rainfall) or, 10-day, 12.4 yr. (6.89 inches Rainfall)	Untreated Release	Little Calumet River
5-23-2020 6:00 PM (estimated start) 5-26-2020 and 5-27-2020 (reports made to Town)	5th Street Basin	3337 Duluth Street 9320 4th Place	Basement Backups (2 Locations) (via. Basement Shower Stall or Fixture)	Ea. <100 gal	Rainfall, Excessive I/I, Under Capacity Sewer	45-min, 61.9 yr. (2.66 inches Rainfall) or, 10-day, 12.4 yr. (6.89 inches Rainfall)	Sewage cleaned up or drained to sewer	None
6-10-2020 10:10 AM to 6-10-2020 11:50 AM	5th Street Basin	MH 1230 on 5th St Interceptor	At 1 Constructed Overflow out of 5th St San Swr into 5th St Stm Swr	77,349 gal	Rainfall, Excessive I/I, Under Capacity Sewer	45-min, 3.2 yr. (1.34 inches Rainfall)	Untreated Release	Little Calumet River
6-26-2020 9:50 PM to 6-27-2020 12:40 AM	5th Street Basin	MH 1230 on 5th St Interceptor	At 1 Constructed Overflow out of 5th St San Swr into 5th St Stm Swr	175,761 gal	Rainfall, Excessive I/I, Under Capacity Sewer	2-hr, 1.5 yr. (1.53 inches Rainfall)	Untreated Release	Little Calumet River
6-28-2020 12:50 PM to 6-28-2020 8:05 PM	5th Street Basin	MH 1230 on 5th St Interceptor	At 1 Constructed Overflow out of 5th St San Swr into 5th St Stm Swr	842,095 gal	Rainfall, Excessive I/I, Under Capacity Sewer	1-hr, 5.9 yr. (1.75 inches Rainfall)	Untreated Release	Little Calumet River
6-28-2020 1:07 PM to 6-28-2020 5:12 PM	5th Street Basin	MH 1345 on 5th St Interceptor	At 1 Constructed Overflow out of 5th St San Swr into 5th St Stm Swr	189,261 gal	Rainfall, Excessive I/I, Under Capacity Sewer	1-hr, 5.9 yr. (1.75 inches Rainfall)	Untreated Release	Little Calumet River
6-28-2020 1:40 PM to 6-28-2020 6:10 PM	5th Street Basin	MH 1039, Duluth Street and Grace Place	Bypass Pumping to Storm Sewer	98,550 gal	Rainfall, Excessive I/I, Under Capacity Sewer	1-hr, 5.9 yr. (1.75 inches Rainfall)	Untreated Release	Little Calumet River
7-19-2020 9:05 AM to 7-19-2020 11:32 AM	5th Street Basin	MH 1345 on 5th St Interceptor	At 1 Constructed Overflow out of 5th St San Swr into 5th St Stm Swr	71 gal	Rainfall, Excessive I/I, Under Capacity Sewer	1-hr, 4.8 yr. (1.68 inches Rainfall)	Untreated Release	Little Calumet River
7-19-2020 9:20 AM to 7-19-2020 4:10 PM	5th Street Basin	MH 1230 on 5th St Interceptor	At 1 Constructed Overflow out of 5th St San Swr into 5th St Stm Swr	881,167 gal	Rainfall, Excessive I/I, Under Capacity Sewer	1-hr, 4.8 yr. (1.68 inches Rainfall)	Untreated Release	Little Calumet River
7-19-2020 10:00 AM to 7-19-2020 2:30 PM	5th Street Basin	MH 1039, Duluth Street and Grace Place	Bypass Pumping to Storm Sewer	98,550 gal	Rainfall, Excessive I/I, Under Capacity Sewer	1-hr, 4.8 yr. (1.68 inches Rainfall)	Untreated Release	Little Calumet River

Town of Highland
Summary of Sanitary Sewer Overflows Reported in 2021

Date / Time	Drainage Basin Location	Location Description	Type of Overflow Event	Estimated Quantity of Overflow	Cause	Rainfall Event Classification	Comments	Receiving Waters
5-9-2021 5:55 AM to 5-9-2021 3:35 PM	5th Street Basin	MH 1230 on 5th St Interceptor	At 1 Constructed Overflow out of 5th St San Swr into 5th St Strm Swr	700,462 gal	Rainfall, Excessive I/I, Under Capacity Sewer	12-hr, 2.1 yr. (2.54 inches Rainfall)	Untreated Release	Little Calumet River
5-9-2021 8:45 AM to 5-9-2021 2:20 PM	5th Street Basin	MH 1039, Duluth Street and Grace Place	Bypass Pumping to Storm Sewer	70,350 gal	Rainfall, Excessive I/I, Under Capacity Sewer	12-hr, 2.1 yr. (2.54 inches Rainfall)	Untreated Release	Little Calumet River
6-25-2021 5:50 AM to 6-25-2021 1:35 PM	5th Street Basin	MH 1230 on 5th St Interceptor	At 1 Constructed Overflow out of 5th St San Swr into 5th St Strm Swr	672,493 gal	Rainfall, Excessive I/I, Under Capacity Sewer	18-hr, 4.2 yr. (3.22 inches Rainfall)	Untreated Release	Little Calumet River
6-25-2021 7:00 AM to 6-25-2021 11:45 AM	5th Street Basin	MH 1039, Duluth Street and Grace Place	Bypass Pumping to Storm Sewer	59,500 gal	Rainfall, Excessive I/I, Under Capacity Sewer	18-hr, 4.2 yr. (3.22 inches Rainfall)	Untreated Release	Little Calumet River
6-26-2021 2:15 PM to 6-27-2021 1:30 PM	5th Street Basin	MH 1230 on 5th St Interceptor	At 1 Constructed Overflow out of 5th St San Swr into 5th St Strm Swr	2,266,982 gal	Rainfall, Excessive I/I, Under Capacity Sewer	72-hr, 34.6 yr. (6.51 inches Rainfall)	Untreated Release	Little Calumet River
6-26-2021 2:44 PM to 6-27-2021 4:25 AM	5th Street Basin	MH 1345 on 5th St Interceptor	At 1 Constructed Overflow out of 5th St San Swr into 5th St Strm Swr	1,697,891 gal	Rainfall, Excessive I/I, Under Capacity Sewer	72-hr, 34.6 yr. (6.51 inches Rainfall)	Untreated Release	Little Calumet River
6-26-2021 3:20 PM to 6-27-2021 1:05 AM	5th Street Basin	MH 1039, Duluth Street and Grace Place	Bypass Pumping to Storm Sewer	215,650 gal	Rainfall, Excessive I/I, Under Capacity Sewer	72-hr, 34.6 yr. (6.51 inches Rainfall)	Untreated Release	Little Calumet River
6-26-2021 5:06 PM to 6-27-2021 6:21 AM	5th Street Basin	MH 1001 on 5th St Interceptor	Bypass Pumping to Storm Sewer	1,870,023 gal	Rainfall, Excessive I/I, Under Capacity Sewer	72-hr, 34.6 yr. (6.51 inches Rainfall)	Untreated Release	Little Calumet River
6-26-2021 8:15 PM to 6-27-2021 3:45 AM	5th Street Basin	MH 4001 (41st Street Lift Station)	Bypass Pumping to Storm Sewer	429,087 gal	Rainfall, Excessive I/I, Under Capacity Sewer	72-hr, 34.6 yr. (6.51 inches Rainfall)	Untreated Release	Cady Marsh Ditch
6-26-2021 6:15 PM (estimated start) 6-28-2021 (reports made to Town)	5th Street Basin	9514 Erie Street 9319 4th Place 3052 97th Place	Basement Backups (3 Locations) (via. Basement Floor Drain or Shower Drain)	Ea. <100 gal	Rainfall, Excessive I/I, Under Capacity Sewer.	72-hr, 34.6 yr. (6.51 inches Rainfall)	Sewage Cleaned up or Drained to Sewer	None
6-28-2021 5:30 PM to 6-28-2021 10:50 PM	5th Street Basin	MH 1230 on 5th St Interceptor	At 1 Constructed Overflow out of 5th St San Swr into 5th St Strm Swr	289,625 gal	Rainfall, Excessive I/I, Under Capacity Sewer	5-day, 39.0 yr. (7.47 inches Rainfall)	Untreated Release	Little Calumet River
6-29-2021 10:35 AM to 6-29-2021 9:35 PM	5th Street Basin	MH 1230 on 5th St Interceptor	At 1 Constructed Overflow out of 5th St San Swr into 5th St Strm Swr	1,097,069 gal	Rainfall, Excessive I/I, Under Capacity Sewer	5-day, 51.1 yr. (8.02 inches Rainfall)	Untreated Release	Little Calumet River
6-29-2021 11:20 AM to 6-29-2021 3:30 PM	5th Street Basin	MH 1039, Duluth Street and Grace Place	Bypass Pumping to Storm Sewer	47,950 gal	Rainfall, Excessive I/I, Under Capacity Sewer	5-day, 51.1 yr. (8.02 inches Rainfall)	Untreated Release	Little Calumet River
6-30-2021 4:25 PM to 6-30-2021 9:20 PM	5th Street Basin	MH 1230 on 5th St Interceptor	At 1 Constructed Overflow out of 5th St San Swr into 5th St Strm Swr	224,037 gal	Rainfall, Excessive I/I, Under Capacity Sewer	10-day, 49.0 yr. (9.18 inches Rainfall)	Untreated Release	Little Calumet River
10-24-2021 7:40 PM to 10-25-2021 9:30 PM	5th Street Basin	MH 1230 on 5th St Interceptor	At 1 Constructed Overflow out of 5th St San Swr into 5th St Strm Swr	3,372,278 gal	Rainfall, Excessive I/I, Under Capacity Sewer	30-hr, 9.0 yr. (4.19 inches Rainfall)	Untreated Release	Little Calumet River
10-24-2021 7:45 PM to 10-25-2021 1:07 PM	5th Street Basin	MH 1039, Duluth Street and Grace Place	Bypass Pumping to Storm Sewer	357,700 gal	Rainfall, Excessive I/I, Under Capacity Sewer	30-hr, 9.0 yr. (4.19 inches Rainfall)	Untreated Release	Little Calumet River
10-25-2021 8:50 AM to 10-25-2021 2:00 PM	5th Street Basin	MH 1345 on 5th St Interceptor	At 1 Constructed Overflow out of 5th St San Swr into 5th St Strm Swr	240,480 gal	Rainfall, Excessive I/I, Under Capacity Sewer	30-hr, 9.0 yr. (4.19 inches Rainfall)	Untreated Release	Little Calumet River

Town of Highland
Summary of Sanitary Sewer Overflows Reported In 2022

Date / Time	Drainage Basin Location	Location Description	Type of Overflow Event	Estimated Quantity of Overflow	Cause	Rainfall Event Classification	Comments	Receiving Waters
2-17-2022 1:25 AM to 2-17-2022 5:35 AM	5th Street Basin	MH 1230 on 5th St Interceptor	At 1 Constructed Overflow out of 5th St San Swr into 5th St Strm Swr	345,478 gal	Rainfall, Snow Melt, Excessive I/I, Under Capacity Sewer	8-hr, <2.0 mo. (0.81 Inches Rainfall) + Significant Snow Melt	Untreated Release	Little Calumet River
2-17-2022 2:40 AM to 2-17-2022 3:25 AM	5th Street Basin	MH 1039, Duluth Street and Grace Place	Bypass Pumping to Storm Sewer	15,750 gal	Rainfall, Snow Melt, Excessive I/I, Under Capacity Sewer	6-hr, <2.0 mo. (0.81 Inches Rainfall) + Significant Snow Melt	Untreated Release	Little Calumet River
5-3-2022 9:25 AM to 5-3-2022 5:15 PM	5th Street Basin	MH 1230 on 5th St Interceptor	At 1 Constructed Overflow out of 5th St San Swr into 5th St Strm Swr	733,501 gal	Rainfall, Excessive I/I, Under Capacity Sewer, 1 of 3 Pumps Out of Service at N. 5th Lift Station for Repair	6-hr, 3.2 mo. (1.18 Inches Rainfall)	Untreated Release	Little Calumet River
5-27-2022 2:50 PM to 5-27-2022 5:30 PM	5th Street Basin	MH 1230 on 5th St Interceptor	At 1 Constructed Overflow out of 5th St San Swr into 5th St Strm Swr	90,378 gal	Rainfall, Excessive I/I, Under Capacity Sewer, 1 of 3 Pumps Out of Service at N. 5th Lift Station for Repair	12-hr, 3.3 mo. (1.39 Inches Rainfall)	Untreated Release	Little Calumet River
9-11-2022 11:25 AM to 9-11-2022 12:15 PM	5th Street Basin	MH 1230 on 5th St Interceptor	At 1 Constructed Overflow out of 5th St San Swr into 5th St Strm Swr	1,248 gal	Rainfall, Excessive I/I, Under Capacity Sewer	3-hr, 3.2 yr. (2.03 Inches Rainfall)	Untreated Release	Little Calumet River

Town of Highland, Indiana
Summary of Sanitary Sewer Overflows and Property Backups
January 1, 2023 – June 30, 2023

Event Number and Type	Date and Time Release Began/Ended	Drainage Basin Location	Location of Release	Description of Area Impacted	Reason for SSO	Amount of Flow Released	Rainfall Information and Classification	Name of Receiving Waters Impacted	Did Highland Follow its Overflow Emergency Response Plan?	Actions Taken to Prevent, Minimize or Mitigate Damage, Including Clean-up and Treatment of Affected Area	Actions Taken or Planned to Prevent Recurrence	Did Highland Exceed its Contractual Peak Flow Rate?	Comments
#1 – SSO	01-03-2023 9:15 PM to 01-03-2023 11:25 PM	5th Street Basin	MH 1230 on 5th St Interceptor (near 8220 5th St)	Reached Receiving Water (At 1 Constructed Overflow out of 5th St San Sewer into 5th St Storm Sewer)	Rainfall, Excessive I/I, Under Capacity Sewer	120,870 gal	24-hr, 5.5 mo. (1.89 inches Rainfall)	Little Calumet River	Yes	Closed valves on LaPorte Street Underground Storage Tank at 8:25 PM on 01/03/2023 to hold back flow from L&J Sanitary Lift Station to minimize volume of overflows. The tank filled to a peak level of 3.26 feet at 7:21 AM on 01/04/2023, at which time the basin valves were opened. The basin was empty by 11:37 AM on 01/04/2023.	Highland Sanitary District is implementing its SSO Remedial Action Plan as part of its Consent Decree with IDEM, EPA and DOJ.	Yes	
#2 – SSO	03-31-2023 9:20 PM to 04-01-2023 12:30 AM	5th Street Basin	MH 1230 on 5th St Interceptor (near 8220 5th St)	Reached Receiving Water (At 1 Constructed Overflow out of 5th St San Sewer into 5th St Storm Sewer)	Rainfall, Excessive I/I, Under Capacity Sewer	206,401 gal	6-hr, 5.4 mo. (1.41 inches Rainfall)	Little Calumet River	Yes	Closed valves on LaPorte Street Underground Storage Tank at 9:08 PM on 03/31/2023 to hold back flow from L&J Sanitary Lift Station to minimize volume of overflows. The tank filled to a peak level of 8.63 feet at 5:23 AM on 04/01/2023. The basin valves were opened at 7:24 AM on 04/02/2023. The basin was empty by 3:34 PM on 04/02/2023.	Highland Sanitary District is implementing its SSO Remedial Action Plan as part of its Consent Decree with IDEM, EPA and DOJ.	Yes	
#3 – SSO	04-27-2023 11:51 PM to 04-28-2023 1:33 PM	5th Street Basin	Along East Side of Bike Trail (Behind 8940-8944 O'Day Drive)	Reached Public Land Reached Receiving Water (Pipe Failure – 41st Street Lift Station Force Main)	Cast Iron Force Main Pipe Failed	28,320* gal (17,156 gal reached receiving waters)	N/A	Cady Marsh Ditch	Yes	Town staff installed sandbag dam and started portable pump at 12:35 PM on 4/28/23 to pump from a containment structure set in the swale behind the houses on O'Day Drive to sanitary sewer MH 5015 in O'Day Drive, preventing a portion of the SSO from reaching the Cady Marsh Ditch. Pump station was shutdown at 1:33 PM on 4/28/23 and the pipe repair was complete at 7:30 PM on 4/28/23. Station was re-started after pipe repair was complete.	Highland Sanitary District is implementing its SSO Remedial Action Plan as part of its Consent Decree with IDEM, EPA and DOJ.	No	*Total volume of leak discharged to land: 28,320 Gal. Volume not reaching Cady (ponding behind dam): 8,393 Gal. Volume not reaching Cady (leak after dam install): 2,771 Gal. Remaining volume of SSO that reached Cady: 17,156 Gal. (28,320 - 8,393 - 2,771 = 17,156)

Town of Highland, Indiana
Summary of Sanitary Sewer Overflows and Property Backups
July 1, 2023 – December 31, 2023

Event Number and Type	Date and Time Release Began/Ended	Drainage Basin Location	Location of Release	Description of Area Impacted	Reason for SSO	Amount of Flow Released	Rainfall Information and Classification	Name of Receiving Waters Impacted	Did Highland Follow its Overflow Emergency Response Plan?	Actions Taken to Prevent, Minimize or Mitigate Damage, Including Clean-up and Treatment of Affected Area	Actions Taken or Planned to Prevent Recurrence	Did Highland Exceed its Contractual Peak Flow Rate?	Comments
NONE													

Town of Highland, Indiana
Board of Sanitary Commissioners

Summary of Progress Made on the Three I/I Investigative Programs

January 30, 2015

1. **RedZone Robotics, Inc.**

   a. **Program Objective**: Televise the entire 5th Street Basin sanitary sewer system using digital, 360 deg camera; provide an evaluation of condition for each pipe and manhole; provide an asset management software system. Any observed active infiltration or potential infiltration, such as root intrusion or mineral deposits, will also be noted. Program provides another resource for continued I/I identification as well as identification and prioritization of necessary sewer repairs.

   b. **Progress Made**:
      1) Televised inspection (digital) of 186,115 lineal feet of the total of 235,004 lineal feet of 8 to 12-inch diameter sewer (79%).
      2) Televised inspection (digital) of 0 lineal feet of the total 56,099 lineal feet of sewers larger than 12-inch (0%).
      3) Televised inspection (digital) of 1,216 manholes of the total of 1,317 manholes in the 5th Street Basin (92%).
      4) Delivered sewer condition assessment and digital video in ICOM3 software for review by Highland for 112,498 lineal feet of 8 to 12-inch diameter sewer (38.6%).
      5) Televised 5th Street Interceptor sewer (5,700 lineal feet of 21, 24 and 27-inch pipe) utilizing special equipment comprising laser scanning above the water line and sonar scanning below the water line plus standard CCTV inspection (not 360 deg digital capability). Condition assessment report delivered by RedZone. The assessment report identified sections of the Interceptor in need of repair.
      6) The Sanitary Board has paid the 1st and 2nd payments totaling $215,848 on the total contract amount of $539,620. Remaining payments are due in January of 2016, 2017 and 2018.

2. **Micro Flow Monitoring and Corrective Action Program**.

   a. **Program Objective**: Utilize flow monitoring technology developed by Stantec Consultants that allows area-velocity flow meters to be installed upstream in smaller diameter sewers with less fouling and maintenance problems. This provides valuable assistance in locating small diameter sewers with higher I/I. Further field work and analysis is then required to try and identify and correct a more specific source of the I/I.

b. **Progress Made**:

1) Stantec Consulting Services Inc. was retained to perform micro flow monitoring in three areas within the 5th Street Sanitary Sewer Basin. The Area A Report was completed on February 12, 2014, the Area C Report on March 27, 2014 and the Area B Report on July 1, 2014. Copies of the reports were provided to USEPA in correspondence dated July 24, 2014. The cost of these reports totaled $40,000.
2) The Area A Report identified that 44% of the I/I from that area came from a sewer in Maple Place (a cul-de-sac street). Following a televised inspection of the sewer by Public Works, it was decided that the existing 175 ft length of 8-inch diameter clay tile sewer should be replace with new 8-inch PVC sewer, with 9, 6-inch diameter house laterals replaced from the new main sewer back to the right-of-way line. Public Works Personnel replaced the sewer in the summer of 2014 while also providing some drainage improvements to reduce standing water over the top of the sewers. One house foundation drain sump pump was found connected to the sanitary sewer and a Plumbing Contractor was engaged in December 2014 to disconnect the foundation drainage from the sanitary sewer. The one foundation drain has now been disconnected. Additionally, Stantec Consulting has been engaged ($19,850 Agreement) to recheck the previous micro flow monitoring results to determine the effectiveness of the I/I reduction efforts for Maple Place. The micro flow monitors were reinserted on October 27, 2014 but meaningful results have not yet been reported due to a lack of rainfall and failure of equipment to record during a November 2014 rainfall event.
3) The Area C Report recommended CIPP Lining of selected sanitary sewers in four subareas that had 68% of the I/I for the Pettit Park area. The Projected Cost of lining the main sewers ($250,000) and installing LMK Technologies T-Liners at lateral connections ($455,000) is $705,000. Funding utilizing a $2.0 million short term Public Works Note is under consideration by the Highland Sanitary Board.
4) The Area B report has been reviewed and suggests that I/I is substantial in all four subareas of Area B. RedZone Robotics, Inc. televised inspections were redirected to cover this area to obtain a current televising and condition assessment. The area has been televised by RedZone, but video work and condition assessments are not yet available.

3. **Smoke Testing Deficiency Correction Program**.

a. **Program Objective**: Utilizing deficiencies identified in the February 2009 Smoke Testing Study, correct the deficiencies to the extent practical and reasonable and document/verify that corrections have taken place.

b. **Progress Made**.

1) The first project undertaken was to remove manhole covers with open pick holes and replace them with closed pick hole manhole covers. 675 manholes were re-

inspected in 2014, with 615 manholes located in the 5th Street Basin and 60 manholes located in the 81st Street Basin. This includes all of the manholes identified in the smoke test report plus a few more identified during inspections. 601 of the 5th Street Basin manholes (97.7%) and 59 of the 81st Street Basin manholes (98.3%) are confirmed complete. Following initial verification inspections of work previously completed by Public Works, 69 corrective action work orders were sent to Public Works for manholes in the 5th Street Basin and 55 of those work orders have been confirmed as completed. Similarly, 24 corrective action work orders were sent to Public Works for manholes in the 81st Street Basin and 23 of those work orders have been confirmed completed.

2) The next effort involved inspecting area drains that had been identified as having smoke come out of them during smoke testing.
    - 27 locations were identified and re-inspected. 5 locations have been confirmed as repaired (19.2%).
    - 1 additional drain in a parking lot of a commercial building was repaired by the Property Owner by capping the drain, with subsequent inspection finding the cap removed. This location has refused to make a permanent disconnection and legal action against the Property Owner has been initiated.
    - 3 locations were simply identified as "smoke in the grass" on private property and have not been investigated further because of the requirement to excavate on private property.
    - The remaining 18 locations have been inspected and evaluated by comparing the costs of Centralized Storage verses the cost of Removal at the Source (see Table 1 to this Appendix). Based on this analysis, the nine yellow highlighted locations are believed to be cost effective to eliminate at the source, while the remaining nine locations are not cost effective. Work to identify exact solutions and costs to correct the 9 locations deemed to be cost effective by preliminary review will commence in the Spring of 2015.
3) As a third approach, sanitary sewers located in Downtown Highland were smoke tested again in December of 2014 to look for roof drains on flat roofs that might be connected directly to the sanitary sewer. A Public Works Bucket Truck was used to elevate the Inspector to the roof height for a better visual look at the roof drains during the smoke testing. The effort located buildings having a total roof area tributary to the sanitary sewer system of 112,668 square feet that were not identified in the 2009 Smoke Testing Program. It was noticed that these buildings seemed to fall into a certain category of buildings constructed prior to about 1970 that had no visual downspouts or scuppers for roof drainage. Based on that observation, there are a few additional buildings that we would also like to dye test to see if the drainage to the sanitary sewer is trapped so no smoke could come out of the roof drains. It will take considerable planning and coordination with Property Owners to make these disconnections.

Town of Highland, Indiana
Board of Sanitary Commissioners

Summary of Progress Made on the Three I/I Investigative Programs

July 31, 2015

1. **RedZone Robotics, Inc.**

   a. **Program Objective**: Televise the entire 5th Street Basin sanitary sewer system using digital, 360 deg camera; provide an evaluation of condition for each pipe and manhole; provide an asset management software system. Any observed active infiltration or potential infiltration, such as root intrusion or mineral deposits, will also be noted. Program provides another resource for continued I/I identification as well as identification and prioritization of necessary sewer repairs.

   b. **Progress Made**:
      1) Televised inspection (digital) of 191,156 lineal feet of the total of 235,004 lineal feet of 8 to 12-inch diameter sewer (81%). The remaining 43,848 lineal feet of 8 to 12-inch sewer is currently being cleaned by Public Works Personnel prior to a second attempt at televised inspection by RedZone.
      2) Televised inspection (digital) of 34,871 lineal feet of the total 56,099 lineal feet of sewers larger than 12-inch (62%).
      3) Televised inspection (digital) of 1,253 manholes of the total of 1,317 manholes in the 5th Street Basin (95%).
      4) Delivered sewer condition assessment and digital video in ICOM3 software for review by Highland for 158,882 lineal feet of 8 to 12-inch diameter sewer (68%) and 5,414 lineal feet of sewers larger than 12-inch (10%).
      5) Televised 5th Street Interceptor sewer (5,700 lineal feet of 21, 24 and 27-inch pipe) utilizing special equipment comprising laser scanning above the water line and sonar scanning below the water line plus standard CCTV inspection (not 360 deg digital capability). Condition assessment report delivered by RedZone. The assessment report identified sections of the Interceptor in need of repair.
      6) The Sanitary Board has paid the 1st and 2nd payments totaling $215,848 on the total contract amount of $539,620. Remaining payments are due in January of 2016, 2017 and 2018.

2. **Micro Flow Monitoring and Corrective Action Program.**

   a. **Program Objective**: Utilize flow monitoring technology developed by Stantec Consultants that allows area-velocity flow meters to be installed upstream in smaller diameter sewers with less fouling and maintenance problems. This provides valuable assistance in locating small diameter sewers with higher I/I. Further field work and

analysis is then required to try and identify and correct a more specific source of the I/I.

b. **Progress Made**:

1) Stantec Consulting Services Inc. was retained to perform micro flow monitoring in three areas within the 5th Street Sanitary Sewer Basin. The Area A Report was completed on February 12, 2014, the Area C Report on March 27, 2014 and the Area B Report on July 1, 2014. Copies of the reports were provided to USEPA in correspondence dated July 24, 2014. The cost of these reports totaled $40,000.
2) The Area A Report identified that 44% of the I/I from that area came from a sewer in Maple Place (a cul-de-sac street). Following a televised inspection of the sewer by Public Works, it was decided that the existing 175 ft length of 8-inch diameter clay tile sewer should be replaced with new 8-inch PVC sewer, with 9, 6-inch diameter house laterals replaced from the new main sewer back to the right-of-way line. Public Works Personnel replaced the sewer in the summer of 2014 while also providing some drainage improvements to reduce standing water over the top of the sewers. One house foundation drain sump pump was found connected to the sanitary sewer and a Plumbing Contractor was engaged in December 2014 to disconnect the foundation drainage from the sanitary sewer. The one foundation drain has now been disconnected. Additionally, Stantec Consulting has been engaged ($22,350 Agreement) to recheck the previous micro flow monitoring results to determine the effectiveness of the I/I reduction efforts for Maple Place. The micro flow monitors were reinserted on October 27, 2014 but meaningful results were difficult to obtain due to a lack of rainfall and fouling of the flow meter equipment. Adjustments were made to the flow meter equipment insertion in the 8-inch sewer outletting from Maple Place in April of 2015 and a final report was received from Stantec on June 25, 2015. See report attached to this Exhibit. A comparison of the storm flows from the pre-rehabilitation monitoring done in 2013 and post-rehabilitation monitoring done in 2014-2015 show an 82% reduction in RDII along the Maple Place sewer.
3) The Area C Report recommended CIPP Lining of selected sanitary sewers in four subareas that had 68% of the I/I for the Pettit Park area. The Projected Cost of lining the main sewers ($250,000) and installing LMK Technologies T-Liners at lateral connections ($455,000) is $705,000. Funding utilizing a separate bond issue is under consideration by the Highland Sanitary Board.
4) The Area B report has been reviewed and suggests that I/I is substantial in all four subareas of Area B. RedZone Robotics, Inc. televised inspections were redirected to cover this area to obtain a current televising and condition assessment. The area has been televised by RedZone, but video work and condition assessments have not yet been completed.

3. **Smoke Testing Deficiency Correction Program.**

   a. **Program Objective**: Utilizing deficiencies identified in the February 2009 Smoke Testing Study, correct the deficiencies to the extent practical and reasonable and document/verify that corrections have taken place.

   b. **Progress Made.**

      1) The first project undertaken was to remove manhole covers with open pick holes and replace them with closed pick hole manhole covers. 675 manholes were re-inspected in 2014, with 615 manholes located in the 5th Street Basin and 60 manholes located in the 81st Street Basin. This includes all of the manholes identified in the smoke test report plus a few more identified during inspections. 612 of the 5th Street Basin manholes (99.5%) and 59 of the 81st Street Basin manholes (98.3%) are confirmed complete. Following initial verification inspections of work previously completed by Public Works, 69 corrective action work orders were sent to Public Works for manholes in the 5th Street Basin and 66 of those work orders have been confirmed as completed. Similarly, 24 corrective action work orders were sent to Public Works for manholes in the 81st Street Basin and 23 of those work orders have been confirmed completed.
      2) The next effort involved inspecting area drains that had been identified as having smoke come out of them during smoke testing.
         - 27 locations were identified and re-inspected. 5 locations have been confirmed as repaired (19.2%).
         - 1 additional drain in a parking lot of a commercial building was repaired by the Property Owner by capping the drain and cementing in the caps.
         - 3 locations were simply identified as "smoke in the grass" on private property and have not been investigated further because of the requirement to excavate on private property.
         - The remaining 18 locations have been inspected and evaluated by comparing the costs of Centralized Storage verses the cost of Removal at the Source (see Table 1 to this Appendix). Based on this analysis, the nine yellow highlighted locations are believed to be cost effective to eliminate at the source, while the remaining nine locations are not cost effective. Work to identify exact solutions and costs to correct the 9 locations deemed to be cost effective by preliminary review has been developed for one of the nine locations.

      3) As a third approach, sanitary sewers located in Downtown Highland were smoke tested again in December of 2014 to look for roof drains on flat roofs that might be connected directly to the sanitary sewer. A Public Works Bucket Truck was used to elevate the Inspector to the roof height for a better visual look at the roof drains during the smoke testing. The effort located buildings having a roof area tributary to the sanitary sewer system of several thousand square feet that were not identified in the 2009 Smoke Testing Program. It was noticed that these buildings seemed to fall into a certain category of buildings constructed prior to

about 1970 that had no visual downspouts or scuppers for roof drainage. In order to implement a program to disconnect these roof drains, the Board developed and implemented Resolution 2015-19, approved at the May 19, 2015 Meeting, providing rules for disconnecting storm drainage from the sanitary sewer system for commercial/industrial properties. A copy of the new Rule is attached to this Exhibit. Enforcement actions have not yet been initiated.

Town of Highland, Indiana
Board of Sanitary Commissioners

Summary of Progress Made on the Three I/I Investigative Programs

January 29, 2016

1. RedZone Robotics, Inc.

a. **Program Objective**: Televise the entire 5th Street Basin sanitary sewer system using digital, 360 deg camera; provide an evaluation of condition for each pipe and manhole; provide an asset management software system. Any observed active infiltration or potential infiltration, such as root intrusion or mineral deposits, will also be noted. Program provides another resource for continued I/I identification as well as identification and prioritization of necessary sewer repairs.

b. **Progress Made**:
   1) Completed digital inspection and condition assessment of 223,491 lineal feet of the revised total of 242,614 lineal feet of 8 to 12-inch diameter sewer (92%). The remaining 19,123 lineal feet of 8 to 12-inch sewer is in the process of being cleaned and re-televised by Public Works Personnel. After successful cleaning and re-televising, the videos obtained will be sent to RedZone for condition assessment.
   2) Completed digital inspection and condition assessment of 49,434 lineal feet of the revised total of 56,190 lineal feet of 15 to 33-inch sewers (88%). The remaining 6,756 lineal feet of 15 to 33-inch sewer is in the process of being cleaned and re-televised by Public Works Personnel. After successful cleaning and re-televising, the videos obtained will be sent to RedZone for condition assessment.
   3) Completed digital inspection and condition assessment of 686 lineal feet of total of 686 lineal feet of sewers 36-inch or larger (100%).
   4) Completed digital inspection and condition assessment of 1,221 manholes of the revised total of 1,341 manholes in the 5th Street Basin (91%).
   5) Entered sample itemized costs for replacement, repair and rehabilitation into ICOM3 software to assist Public Works Personnel in the prioritizing of projects based on structural defects and project costs. Public Works Personnel are currently in the process of developing a priority list for an ongoing maintenance plan beginning with 2016.
   6) The Highland Sanitary Board has paid the 1st and 2nd payments totaling $215,848 on the total contract amount of $539,620. The 3rd payment in the amount of $107,925 is expected to be paid in February 2016. Remaining payments are due in January of 2017 and 2018.
   7) During re-televising work by Public Works Personnel in between August 2015 and January 2016, two sections of 15-inch sanitary sewer and one section of 12-inch sanitary sewer were found to have severe structural and I/I defects requiring

immediate repair. The first section was located in the right southbound lane of Kennedy Avenue, just south of Franklin Street. The second section was located in the alley north of Highway Avenue, just east of Kennedy Avenue. Construction of the repair work for these two sections was completed by November 25, 2015. The third section, located in the north parkway of Strong Street just east of Kennedy Avenue, is expected to be completed in early February 2016.

2. **Micro Flow Monitoring and Corrective Action Program**.

   a. **Program Objective**: Utilize flow monitoring technology developed by Stantec Consultants that allows area-velocity flow meters to be installed upstream in smaller diameter sewers with less fouling and maintenance problems. This provides valuable assistance in locating small diameter sewers with higher I/I. Further field work and analysis is then required to try and identify and correct a more specific source of the I/I.

   b. **Progress Made**:
      1) Although no additional micromonitoring was performed Stantec Consulting Services Inc. since the last semi-annual status update in July 2015, the Highland Sanitary Board developed a capital projects list for 2016 that targets I/I sources in Areas A and C.
      2) The project currently under consideration for Area A (Johnston Street area, between 81st Street and Grand Boulevard) consists of replacing approximately 2,600 feet of sanitary sewer along Johnston Street and the remaining culs-de-sac, as well as adding 660 feet of storm sewer to support foundation drain separation along the 3400 block of Grand Boulevard. The opinion of probable construction cost for this project is approximately $1,255,400. Funding utilizing a separate bond issue is under consideration by the Highland Sanitary Board.
      3) The project currently under consideration for Area C (Pettit Park area) consist of CIPP lining of approximately 4,417 feet of 8-inch sewer, 600 feet of 10-inch sewer and 1,746 feet of 12-inch sewer. Due to excessive cost, lateral connection lining is no longer under consideration at this time. The opinion of probable construction cost for this project is approximately $275,000. Funding utilizing a separate bond issue is under consideration by the Highland Sanitary Board.
      4) Since replacement/repair/rehabilitation cost for work in Area B has not yet been developed, work in this area would be considered if found to rank high enough on the priority list currently being developed using RedZone condition assessment and project cost comparisons.

3. **Smoke Testing Deficiency Correction Program**.

   a. **Program Objective**: Utilizing deficiencies identified in the February 2009 Smoke Testing Study, correct the deficiencies to the extent practical and reasonable and document/verify that corrections have taken place.

b. **Progress Made.**

1) The first project undertaken was to remove manhole covers with open pick holes and replace them with closed pick hole manhole covers. Since the last semi-annual update in July 2015, one additional manhole in the 5th Street Basin was found and inspected, bringing the total number of manholes re-inspected to 676, of which 616 are located in the 5th Street Basin and 60 are located in the 81st Street Basin. 615 of the 5th Street Basin manholes (99.8%) and 59 of the 81st Street Basin manholes (98.3%) are confirmed complete. A total of 73 corrective action work orders have been sent to Public Works for manholes in the 5th Street Basin, of which 72 have been confirmed as completed. Similarly, 24 corrective action work orders have been sent to Public Works for manholes in the 81st Street Basin, of which 23 have been confirmed completed.
2) The next effort involved inspecting area drains that had been identified as having smoke come out of them during smoke testing. Work to correct the 9 locations deemed to be cost effective is still awaiting funding before implementation. Since the last semi-annual update in July 2015, Public Works Staff identified an additional 20 locations with area drains still connected to the sanitary sewer. These locations consist of residential properties with depressed driveways that collect stormwater runoff in a trench drain or inlet at the base of the driveway outside the garage. A preliminary plan to separate six of the depressed driveways, all of which are located on 99th Place West, was developed and is under consideration by the Sanitary Board.
3) As a third approach, sanitary sewers located in Downtown Highland were smoke tested again in December of 2014 to identify locations with roof drains or area inlets that were still connected directly to the sanitary sewer. This effort located seventeen properties with roof area and/or ground area tributary to the sanitary sewer system that were not identified in the 2009 Smoke Testing Program. In order to implement a program to disconnect these roof and area drains, the Highland Sanitary Board developed and implemented Resolution 2015-19, approved at the May 19, 2015 Meeting, providing rules for disconnecting storm drainage from the sanitary sewer system for commercial/industrial properties. A copy of this Rule was attached to the July 2015 semi-annual status update. The Board commenced work on the disconnection program by sending out letters to four properties on August 31, 2015, two properties on October 14, 2015 and two properties on December 15, 2015. Of these eight properties, two properties have completed disconnection work (eliminating approximately 15,166 square feet of tributary area), one property is in the process of conducting the disconnection work, two properties have submitted disconnection plans and three properties have not yet submitted disconnection plans.

Town of Highland, Indiana
Board of Sanitary Commissioners

Summary of Progress Made on the Three I/I Investigative Programs

July 28, 2016

1. RedZone Robotics, Inc.

a. **Program Objective**: Televise the entire 5th Street Basin sanitary sewer system using digital, 360 deg camera; provide an evaluation of condition for each pipe and manhole; provide an asset management software system. Any observed active infiltration or potential infiltration, such as root intrusion or mineral deposits, will also be noted. Program provides another resource for continued I/I identification as well as identification and prioritization of necessary sewer repairs.

b. **Progress Made**:
   1) Public Works personnel have successfully cleaned and inspected 79 of the 96 pipe segments for which inspection by RedZone was attempted but not completed (21,845 feet of total 26,265 feet). The videos obtained were sent to RedZone for condition assessment, which is currently in process.
   2) In addition, Public Works personnel have successfully cleaned and inspected 27 of the 96 pipe segments that were unable to be located by RedZone (6,419 feet of total 23,518 feet). The videos will be sent to RedZone for condition assessment once more videos are obtained.
   3) Utilizing RedZone's ICOM3 software, Public Works Personnel have developed a priority list for sewer replacement, repair and rehabilitation. For 2016, approximately $1,000,000 of work from the priority list will be included in the Highland Sanitary Board's pending $7.5 million bond issue for 2016 capital projects. Annual Service Agreements for sanitary sewer CIPP Lining, CIPP point repairs and manhole rehabilitation were awarded at the Board's July 19, 2016 meeting. Work is currently underway to develop work orders based on the unit pricing received.
   4) During re-televising work by Public Works Personnel since the last semi-annual update, one section of 12-inch sanitary sewer was found to have severe structural and I/I defects requiring immediate repair. The pipe section was located in the sideyard between houses on Duluth Street (MH 1113-1110), just east of Maple Drive. Construction of the repair work was completed on April 7, 2016.
   5) The Highland Sanitary Board has paid the first, second and third payments totaling $323,773 on the total contract amount of $539,620. Remaining payments are due in January of 2017 and 2018.

2. **Micro Flow Monitoring and Corrective Action Program.**

   a. **Program Objective**: Utilize flow monitoring technology developed by Stantec Consultants that allows area-velocity flow meters to be installed upstream in smaller diameter sewers with less fouling and maintenance problems. This provides valuable assistance in locating small diameter sewers with higher I/I. Further field work and analysis is then required to try and identify and correct a more specific source of the I/I.

   b. **Progress Made**:
      1) Although no additional micromonitoring was performed Stantec Consulting Services Inc. since the last semi-annual status update in January 2016, the Highland Sanitary Board is moving forward with projects targeting removal of I/I sources in Areas A and C as part of the pending $7.5 million bond issue for 2016 capital projects.
      2) The Board has authorized engineering design for Area A (Johnston Street area, between 81st Street and Grand Boulevard), which consists of replacing approximately 2,600 feet of sanitary sewer along Johnston Street and the remaining culs-de-sac, as well as rehabilitating or replacing the storm sewer along the 3400 block of Grand Boulevard to support foundation drain separation. The opinion of probable construction cost for this project is approximately $1,281,000. This project will be funded by the $7.5 million bond issue.
      3) The project currently under consideration for Area C (Pettit Park area) consist of CIPP lining of approximately 4,417 feet of 8-inch sewer, 600 feet of 10-inch sewer and 1,746 feet of 12-inch sewer, as well as rehabilitation of manholes. Due to excessive cost, lateral connection lining is not included in the project. The opinion of probable construction cost for this project is approximately $400,000. This project will be funded by the $7.5 million bond issue.
      4) Since replacement/repair/rehabilitation cost for work in Area B has not yet been developed, work in this area would be considered if found to rank high enough on the priority list currently being developed using RedZone condition assessment and project cost comparisons.

3. **Smoke Testing Deficiency Correction Program.**

   a. **Program Objective**: Utilizing deficiencies identified in the February 2009 Smoke Testing Study, correct the deficiencies to the extent practical and reasonable and document/verify that corrections have taken place.

   b. **Progress Made.**
      1) The first project involves removing manhole covers with open pick holes and replacing them with closed pick hole manhole covers. Since the last semi-annual update in January 2016, no additional defective manhole covers were found or replaced.

2) The second project involves correcting area drains on residential property that have been identified during smoke testing as being connected to the sanitary sewer system. This work has been placed on hold by the Board due to cost considerations.
3) The third project consists of disconnecting storm drainage from the sanitary sewer system for commercial/industrial properties, primarily in Downtown Highland. Since the last semi-annual update, letters have been sent out to two additional properties on February 16, 2016, bringing the cumulative total to ten of the seventeen properties identified. To date, three properties have completed disconnection work (eliminating approximately 30,286 square feet of tributary area), one property is currently performing disconnection work, two properties are coordinating disconnection plans with the Town and four properties have not yet submitted disconnection plans. The Board also has also requested quotes from Contractors to extend storm sewer along Kennedy Avenue to provide a discharge point for one of the properties. Quotes for this work will be received on August 2, 2016.

Town of Highland, Indiana
Board of Sanitary Commissioners

Summary of Progress Made on the Three I/I Investigative Programs

January 31, 2017

1. **RedZone Robotics, Inc.**

   a. **Program Objective**: Televise the entire 5th Street Basin sanitary sewer system using digital, 360 deg camera; provide an evaluation of condition for each pipe and manhole; provide an asset management software system. Any observed active infiltration or potential infiltration, such as root intrusion or mineral deposits, will also be noted. Program provides another resource for continued I/I identification as well as identification and prioritization of necessary sewer repairs.

   b. **Progress Made**:
      1) Public Works personnel have successfully cleaned and inspected all of the pipe segments for which inspection by RedZone was attempted but not completed. The videos obtained were sent to RedZone for condition assessment and have been added to the ICOM3 platform.
      2) In addition, Public Works personnel have successfully cleaned and inspected all of the pipe segments that were unable to be located by RedZone. The videos obtained were sent to RedZone for condition assessment and have been added to the ICOM3 platform.
      3) Utilizing RedZone's ICOM3 software, Public Works Personnel completed a priority list of sewer replacement, repair and rehabilitation for 2016 and currently are in the process of developing a priority list for 2017. Work Orders for the 2016 list have been issued in the amounts of $1,239,382.70 for CIPP lining and $149,719.30 for MH rehabilitation. These Work Orders are being funded by the 2016 bond issue, and will begin construction in Spring 2017.
      4) The Highland Sanitary Board has paid the first, second and third payments totaling $323,773 on the total contract amount of $539,620. The fourth payment is schedule to be paid soon and the final payment is due in January of 2018.

2. **Micro Flow Monitoring and Corrective Action Program**.

   a. **Program Objective**: Utilize flow monitoring technology developed by Stantec Consultants that allows area-velocity flow meters to be installed upstream in smaller diameter sewers with less fouling and maintenance problems. This provides valuable assistance in locating small diameter sewers with higher I/I. Further field work and

analysis is then required to try and identify and correct a more specific source of the I/I.

b. **Progress Made**:
   1) Although no additional micromonitoring was performed by Stantec Consulting Services Inc. since the last semi-annual status update in July 2016, the Highland Sanitary Board is moving forward with projects targeting removal of I/I sources in Areas A and C as part of the 2016 $7.5 million bond issue, which will begin construction in Spring 2017.
   2) Engineering design is currently underway for Area A (Johnston Street area, between 81st Street and Grand Boulevard), which consists of replacing approximately 2,600 feet of sanitary sewer along Johnston Street and the remaining culs-de-sac, as well as rehabilitating the storm sewer along the 3400 block of Grand Boulevard to support foundation drain separation. The opinion of probable construction cost for this project is approximately $1,281,000. This project is included in the 2016 $7.5 million bond issue.
   3) The project for Area C (Pettit Park area), which will begin construction in Spring of 2017, consists of CIPP lining of approximately 10,315 feet of 8-inch sewer, 2,321 feet of 10-inch sewer and 790 feet of 12-inch sewer, as well as rehabilitation of 49 manholes. The total estimated work order amount is $504,362.80, which is included in the Work Orders amounts listed in 1.b.3). Due to excessive cost, lateral connection lining is not included in the project. This project is being funded by the 2016 bond issue.
   4) Replacement/repair/rehabilitation cost for work in Area B has not yet been developed, although this area will be evaluated for inclusion on the annual list of sewer rehabilitation work expected for 2017.

3. Smoke Testing Deficiency Correction Program.

a. **Program Objective**: Utilizing deficiencies identified in the February 2009 Smoke Testing Study, correct the deficiencies to the extent practicable and reasonable and document/verify that corrections have taken place.

b. **Progress Made**.
   1) The first project involves removing manhole covers with open pick holes and replacing them with closed pick hole manhole covers. Since the last semi-annual update in July 2016, no additional defective manhole covers were found or replaced.
   2) The second project involves correcting area drains on residential property that have been identified during smoke testing as being connected to the sanitary sewer system. This work has been placed on hold by the Board due to cost considerations.
   3) The third project consists of disconnecting storm drainage from the sanitary sewer system for commercial/industrial properties, primarily in Downtown Highland. Since the last semi-annual update, letters have been sent out to eight additional

properties on August 15, 2016 and one additional property on October 27, 2016, bringing the cumulative total to nineteen of nineteen properties identified. To date, ten properties have completed disconnection work (eliminating approximately 50,904 square feet of tributary area) and the remaining nine properties have not yet submitted disconnection plans. In September 2016, the Board completed a project to extend storm sewer along Kennedy Avenue to facilitate disconnection of one of the properties. That property completed disconnection of its roof drainage in late October 2016 and is included in the number of disconnected properties listed above.

Town of Highland, Indiana
Board of Sanitary Commissioners

Summary of Progress Made on the Three I/I Investigative Programs

July 31, 2017

1. **RedZone Robotics, Inc.**

   a. **Program Objective**: Televise the entire 5th Street Basin sanitary sewer system using digital, 360 deg camera; provide an evaluation of condition for each pipe and manhole; provide an asset management software system. Any observed active infiltration or potential infiltration, such as root intrusion or mineral deposits, will also be noted. Program provides another resource for continued I/I identification as well as identification and prioritization of necessary sewer repairs.

   b. **Progress Made**:
      1) All pipe segments in the 5th Street Basin have been inspected by RedZone and/or Highland Public Works personnel. All inspection videos have been added to the ICOM3 software platform.
      2) The CIPP sewer lining and MH rehabilitation work included on the 2016 priority list of sewer replacement/repair/rehabilitation is complete. The initial Work Order amounts were $1,239,382.70 for CIPP sewer lining and $149,719.30 for MH rehabilitation; costs are being finalized to include field changes and adjustments.
      3) Utilizing RedZone's ICOM3 software, Highland Public Works personnel completed a priority list of sewer replacement/repair/rehabilitation for 2017. The project is awaiting Board action.
      4) The Highland Sanitary Board has paid the first, second, third and fourth payments totaling $431,697 on the total contract amount of $539,620. The final payment is due in January of 2018.

2. **Micro Flow Monitoring and Corrective Action Program.**

   a. **Program Objective**: Utilize flow monitoring technology developed by Stantec Consultants that allows area-velocity flow meters to be installed upstream in smaller diameter sewers with less fouling and maintenance problems. This provides valuable assistance in locating small diameter sewers with higher I/I. Further field work and analysis is required then to try to identify and correct a more specific source of the I/I.

   b. **Progress Made**:
      1) No additional micromonitoring work was performed since the last semi-annual status update in January 2017.

2) Micromonitoring Area A (Johnston Street area, between 81st Street and Grand Boulevard): engineering design is complete and construction is underway. The sanitary sewer replacement project includes 2,040 feet of sanitary sewer along Johnston Street and the remaining culs-de-sac. The initial construction contract amount is $572,593.00 and is being funded by the 2016 $7.5 million bond issue.
3) Micromonitoring Area B (Maple/Eder/Grand, between Parrish Ave and Grace St): sewer pipe segments in this area are included on the priority list of sewer replacement/repair/rehabilitation for 2017. As described in 1.b.3) above, this work is awaiting Board action.
4) Micromonitoring Area C (Pettit Park area): CIPP sewer lining and MH rehabilitation is complete. The work included CIPP lining of approximately 10,315 feet of 8-inch sewer, 2,321 feet of 10-inch sewer and 790 feet of 12-inch sewer, as well as rehabilitation of 49 manholes at an initial Work Order amount of $504,362.80. Costs are being finalized to include field changes and adjustments. This work is part of the project described in 1.b.2) above, which is being funded by the 2016 $7.5 million bond issue.

3. Smoke Testing Deficiency Correction Program.

a. **Program Objective**: Utilizing deficiencies identified in the February 2009 Smoke Testing Study, correct the deficiencies to the extent practicable and reasonable and document/verify that corrections have taken place.

b. **Progress Made.**
1) The first project involves removing manhole covers with open pick holes and replacing them with closed pick hole manhole covers. Since the last semi-annual update in January 2017, no additional defective manhole covers were found or replaced.
2) The second project involves correcting area drains on residential property that have been identified during smoke testing as being connected to the sanitary sewer system. This work has been placed on hold by the Board due to cost considerations.
3) The third project consists of disconnecting storm drainage from the sanitary sewer system for commercial/industrial properties, primarily in Downtown Highland. To date, twelve properties have completed disconnection work, eliminating approximately 53,260 square feet of tributary area.

Town of Highland, Indiana
Board of Sanitary Commissioners

Summary of Progress Made on the Three I/I Investigative Programs

January 31, 2018

1. **RedZone Robotics, Inc.**

   a. **Program Objective**: Televise the entire 5th Street Basin sanitary sewer system using digital, 360 deg camera; provide an evaluation of condition for each pipe and manhole; provide an asset management software system. Any observed active infiltration or potential infiltration, such as root intrusion or mineral deposits, will also be noted. Program provides another resource for continued I/I identification as well as identification and prioritization of necessary sewer repairs.

   b. **Progress Made**:
      1) All pipe segments in the 5th Street Basin have been inspected by RedZone and/or Highland Public Works personnel. All inspection videos have been added to the ICOM3 software platform.
      2) The CIPP sewer lining and MH rehabilitation work included on the 2016 priority list of sewer replacement/repair/rehabilitation is complete. The initial Work Order amount for CIPP sewer lining was $1,239,382.70; costs are being finalized to include field changes and adjustments. The final Work Order amount for MH rehabilitation was $156,387.00.
      3) Utilizing RedZone's ICOM3 software, Highland Public Works personnel updated the priority list of sewer replacement/repair/rehabilitation for 2018. The list will be refined based on sewer lining bid prices.
      4) The Highland Sanitary Board has paid the first, second, third and fourth payments totaling $431,697 on the total contract amount of $539,620. The final payment is due in January of 2018.

2. **Micro Flow Monitoring and Corrective Action Program**.

   a. **Program Objective**: Utilize flow monitoring technology developed by Stantec Consultants that allows area-velocity flow meters to be installed upstream in smaller diameter sewers with less fouling and maintenance problems. This provides valuable assistance in locating small diameter sewers with higher I/I. Further field work and analysis is required then to try to identify and correct a more specific source of the I/I.

   b. **Progress Made**:
      1) No additional micromonitoring work was performed since the last semi-annual status update in July 2017.

2) Micromonitoring Area A (Johnston Street area, between 81st Street and Grand Boulevard): all construction work is complete. A total of 2,042 feet of sanitary sewer was replaced along Johnston Street and the remaining culs-de-sac. The final construction contract amount of $626,720.65 was funded by the 2016 $7.5 million bond issue.
3) Micromonitoring Area B (Maple/Eder/Grand, between Parrish Ave and Grace St): sewer pipe segments in this area are included on the priority list of sewer replacement/repair/rehabilitation for 2018.
4) Micromonitoring Area C (Pettit Park area): CIPP sewer lining and MH rehabilitation is complete. The work included CIPP lining of approximately 10,315 feet of 8-inch sewer, 2,321 feet of 10-inch sewer and 790 feet of 12-inch sewer, as well as rehabilitation of 49 manholes at an initial Work Order amount of $504,362.80. Costs are being finalized to include field changes and adjustments. This work is part of the project described in 1.b.2) above, which is being funded by the 2016 $7.5 million bond issue.

3. Smoke Testing Deficiency Correction Program.

a. **Program Objective**: Utilizing deficiencies identified in the February 2009 Smoke Testing Study, correct the deficiencies to the extent practicable and reasonable and document/verify that corrections have taken place.

b. **Progress Made.**
1) The first project involves removing manhole covers with open pick holes and replacing them with closed pick hole manhole covers. Since the last semi-annual update in July 2017, no additional defective manhole covers were found or replaced.
2) The second project involves correcting area drains on residential property that have been identified during smoke testing as being connected to the sanitary sewer system. This work has been placed on hold by the Board due to cost considerations.
3) The third project consists of disconnecting storm drainage from the sanitary sewer system for commercial/industrial properties, primarily in Downtown Highland. To date, sixteen properties have completed disconnection work, eliminating a cumulative total of approximately 72,625 square feet of tributary area. In November 2017, the Board completed a project that removed two alley inlets from the sanitary sewer, eliminating 12,540 square feet of tributary pavement area. In January 2018, the Town demolished the old Town Theater building, eliminating 4,456 square feet of tributary roof area. Both of these I/I reductions are included in the cumulative summary above.

Town of Highland, Indiana
Board of Sanitary Commissioners

Summary of Progress Made on the Three I/I Investigative Programs

July 31, 2018

1. **RedZone Robotics, Inc.**

   a. **Program Objective**: Televise the entire 5th Street Basin sanitary sewer system using digital, 360 deg camera; provide an evaluation of condition for each pipe and manhole; provide an asset management software system. Any observed active infiltration or potential infiltration, such as root intrusion or mineral deposits, will also be noted. Program provides another resource for continued I/I identification as well as identification and prioritization of necessary sewer repairs.

   b. **Progress Made**:
      1) All pipe segments in the 5th Street Basin have been inspected by RedZone and/or Highland Public Works personnel. All inspection videos have been added to the ICOM3 software platform.
      2) The CIPP sewer lining and MH rehabilitation work included on the 2016 priority list of sewer replacement/repair/rehabilitation is complete. The final Work Order amount for CIPP sewer lining is $1,208,833.20.
      3) Utilizing RedZone's ICOM3 software, Highland Public Works personnel updated the priority list of sewer replacement/repair/rehabilitation for 2018. The list was revised based on new CIPP lining prices from bids received on March 29, 2018. A work authorization for 2018 in the estimated amount of $887,983.00 for approx. 16,650 feet of sewer lining was issued on June 8, 2018. Work is expected to be substantially complete by December 5, 2018.
      4) The Highland Sanitary Board has paid all five payments in the total contract amount of $539,620.
      5) The Highland Sanitary Board approved a contract with RedZone at their July 19, 2018 meeting to televise and evaluate the sanitary sewers and manholes in the 81st Street Basin. The work also includes adding these manholes and pipe segments to the asset management software system.

2. **Micro Flow Monitoring and Corrective Action Program**.

   a. **Program Objective**: Utilize flow monitoring technology developed by Stantec Consultants that allows area-velocity flow meters to be installed upstream in smaller diameter sewers with less fouling and maintenance problems. This provides valuable assistance in locating small diameter sewers with higher I/I. Further field work and analysis is required then to try to identify and correct a more specific source of the I/I.

b. **Progress Made**:
   1) No additional micromonitoring work was performed since the last semi-annual status update in January 2018.
   2) Micromonitoring Area B (Maple/Eder/Grand, between Parrish Ave and Grace St): sewer pipe segments in this area are included in the 2018 CIPP lining work authorization.

3. **Smoke Testing Deficiency Correction Program**.

   a. **Program Objective**: Utilizing deficiencies identified in the February 2009 Smoke Testing Study, correct the deficiencies to the extent practicable and reasonable and document/verify that corrections have taken place.

   b. **Progress Made**.
      1) The first project involves removing manhole covers with open pick holes and replacing them with closed pick hole manhole covers. Since the last semi-annual update in January 2018, no additional defective manhole covers were found or replaced.
      2) The second project involves correcting area drains on residential property that have been identified during smoke testing as being connected to the sanitary sewer system. This work has been placed on hold by the Board due to cost considerations.
      3) The third project consists of disconnecting storm drainage from the sanitary sewer system for commercial/industrial properties, primarily in Downtown Highland. To date, sixteen properties have completed disconnection work, eliminating a cumulative total of approximately 72,625 square feet of tributary area. Since the last semi-annual update in January 2018, no additional disconnection work has been performed.

Town of Highland, Indiana
Board of Sanitary Commissioners

Summary of Progress Made on the Three I/I Investigative Programs

January 31, 2019

1. RedZone Robotics, Inc.

a. **Program Objective**: Televise the entire 5th Street Basin sanitary sewer system and 81st Street Basin sanitary sewer system using digital, 360 deg camera; provide an evaluation of condition for each pipe and manhole; provide an asset management software system. Any observed active infiltration or potential infiltration, such as root intrusion or mineral deposits, will also be noted. Program provides another resource for continued I/I identification as well as identification and prioritization of necessary sewer repairs.

b. **Progress Made (5th Street Basin)**:
   1) All pipe segments in the 5th Street Basin have been inspected by RedZone and/or Highland Public Works personnel. All inspection videos have been added to the ICOM3 software platform.
   2) The CIPP sewer lining work included on the 2018 priority list of sewer replacement/repair/rehabilitation is complete. Total length of pipe lined, by size, is as follows: 7,129 feet of 8-inch, 3,612 feet of 10-inch, 3,811 feet of 12-inch, 831 feet of 15-inch and 625 feet of 18-inch. The initial Work Order amount for CIPP sewer lining was $887,983.00; costs are being finalized to include field changes and adjustments from original estimate.
   3) Utilizing RedZone's ICOM3 software, Highland Public Works personnel are in the process of updating the priority list of sewer replacement/repair/rehabilitation for 2019.
   4) The Highland Sanitary Board has paid the total contract amount of $539,620.

c. **Progress Made (81st Street Basin)**:
   1) On September 4, 2018, The Highland Sanitary Board entered into a contract with RedZone Robotics, Inc. to inspect all sanitary sewer pipe and manholes within the 81st Street Basin. The contract amount of $388,824.15 is divided into five annual payments.
   2) RedZone has completed initial inspections of pipes and manholes in the 81st St Basin and is working with Highland Public Works to address segments that were not able to be inspected completely.

2. **Micro Flow Monitoring and Corrective Action Program**.

   a. **Program Objective**: Utilize flow monitoring technology developed by Stantec Consultants that allows area-velocity flow meters to be installed upstream in smaller diameter sewers with less fouling and maintenance problems. This provides valuable assistance in locating small diameter sewers with higher I/I. Further field work and analysis is required then to try to identify and correct a more specific source of the I/I.

   b. **Progress Made**:
      1) No additional micromonitoring work was performed since the last semi-annual status update in July 2018.
      2) Micromonitoring Area B (Maple/Eder/Grand, between Parrish Ave and Grace St): all of the sewer pipe segments in this micromonitoring area were rehabilitated using CIPP lining in 2018.

3. **Smoke Testing Deficiency Correction Program**.

   a. **Program Objective**: Utilizing deficiencies identified in the February 2009 Smoke Testing Study, correct the deficiencies to the extent practicable and reasonable and document/verify that corrections have taken place.

   b. **Progress Made**.
      1) The first project involves removing manhole covers with open pick holes and replacing them with closed pick hole manhole covers. Since the last semi-annual update in July 2018, no additional defective manhole covers were found or replaced.
      2) The second project involves correcting area drains on residential property that have been identified during smoke testing as being connected to the sanitary sewer system. This work has been placed on hold by the Board due to cost considerations.
      3) The third project consists of disconnecting storm drainage from the sanitary sewer system for commercial/industrial properties, primarily in Downtown Highland. To date, sixteen properties have completed disconnection work, eliminating a cumulative total of approximately 72,625 square feet of tributary area. Since the last semi-annual update in July 2018, no additional disconnection work has been performed.

Town of Highland, Indiana
Board of Sanitary Commissioners

Summary of Progress Made on the Three I/I Investigative Programs

July 31, 2019

1. RedZone Robotics, Inc.

a. **Program Objective**: Televise the entire 5th Street Basin sanitary sewer system and 81st Street Basin sanitary sewer system using digital, 360 deg camera; provide an evaluation of condition for each pipe and manhole; provide an asset management software system. Any observed active infiltration or potential infiltration, such as root intrusion or mineral deposits, will also be noted. Program provides another resource for continued I/I identification as well as identification and prioritization of necessary sewer repairs.

b. **Progress Made (5th Street Basin)**:
   1) All pipe segments in the 5th Street Basin have been inspected by RedZone and/or Highland Public Works personnel. All inspection videos have been added to the ICOM3 software platform.
   2) The 2018 CIPP sewer lining work is complete. The final Work Order amount was $847,955.50 and included the following total lengths of pipe lined, by size: 6,760 feet of 8-inch, 4,039 feet of 10-inch, 3,718 feet of 12-inch, 726 feet of 15-inch and 625 feet of 18-inch. A few pipe segments were found to be of a different diameter than expected when detailed measurements were taken for liner manufacturing.
   3) The 2019 CIPP sewer lining work is currently underway. The initial Work Order estimate is $1,005,138.10 and includes the following estimated lengths of pipe to be lined, by size: 3,419 feet of 8-inch, 2,354 feet of 12-inch, 6,396 feet of 15-inch, 1,002 feet of 18-inch, 469 feet of 21-inch and 632 feet of 27-inch.

c. **Progress Made (81st Street Basin)**:
   1) On September 4, 2018, The Highland Sanitary Board entered into a contract with RedZone Robotics, Inc. to inspect all sanitary sewer pipe and manholes within the 81st Street Basin. The contract amount of $388,824.15 is divided into five annual payments. The Highland Sanitary Board has paid the first annual installment.
   2) RedZone has completed initial inspections of pipes and manholes in the 81st St Basin. Highland Public Works personnel have cleaned and/or located the pipes and manholes noted as incomplete during RedZone's initial inspections. RedZone is expected to return to Highland to complete the remaining inspections.

2. **Micro Flow Monitoring and Corrective Action Program**.

   a. **Program Objective**: Utilize flow monitoring technology developed by Stantec Consultants that allows area-velocity flow meters to be installed upstream in smaller diameter sewers with less fouling and maintenance problems. This provides valuable assistance in locating small diameter sewers with higher I/I. Further field work and analysis is required then to try to identify and correct a more specific source of the I/I.

   b. **Progress Made**:
      1) No additional micromonitoring work was performed since the last semi-annual status update in January 2019.

3. **Smoke Testing Deficiency Correction Program**.

   a. **Program Objective**: Utilizing deficiencies identified in the February 2009 Smoke Testing Study, correct the deficiencies to the extent practicable and reasonable and document/verify that corrections have taken place.

   b. **Progress Made**.
      1) The first project involves removing manhole covers with open pick holes and replacing them with closed pick hole manhole covers. Since the last semi-annual update in January 2019, no additional defective manhole covers were found or replaced.
      2) The second project involves correcting area drains on residential property that have been identified during smoke testing as being connected to the sanitary sewer system. This work has been placed on hold by the Board due to cost considerations.
      3) The third project consists of disconnecting storm drainage from the sanitary sewer system for commercial/industrial properties, primarily in Downtown Highland. To date, sixteen properties have completed disconnection work, eliminating a cumulative total of approximately 72,625 square feet of tributary area. Since the last semi-annual update in January 2019, no additional disconnection work has been performed.

Town of Highland, Indiana
Board of Sanitary Commissioners

Summary of Progress Made on the Three I/I Investigative Programs

January 31, 2020

1. RedZone Robotics, Inc.

a. **Program Objective**: Televise the entire 5th Street Basin sanitary sewer system and 81st Street Basin sanitary sewer system using digital, 360 deg camera; provide an evaluation of condition for each pipe and manhole; provide an asset management software system. Any observed active infiltration or potential infiltration, such as root intrusion or mineral deposits, will also be noted. Program provides another resource for continued I/I identification as well as identification and prioritization of necessary sewer repairs.

b. **Progress Made (5th Street Basin)**:
   1) All pipe segments in the 5th Street Basin have been inspected by RedZone and/or Highland Public Works personnel. All inspection videos have been added to the ICOM3 software platform.
   2) The 2019 CIPP sewer lining work is complete. The final Work Order amount was $1,081,165.80 and included the following total lengths of pipe lined, by size: 3,406 feet of 8-inch, 656 feet of 10-inch, 2,237 feet of 12-inch, 4,453 feet of 15-inch, 2,983 feet of 18-inch, 650 feet of 21-inch and 643 feet of 27-inch. Four pipe segments were added to the initial Work Order and several pipe segments were found to be of a different diameter than expected when detailed measurements were taken for liner manufacturing.
   3) Utilizing RedZone's ICOM3 software, Highland Public Works personnel are in the process of updating the priority list of sewer replacement/repair/rehabilitation for 2020.

c. **Progress Made (81st Street Basin)**:
   1) On September 4, 2018, The Highland Sanitary Board entered into a contract with RedZone Robotics, Inc. to inspect all sanitary sewer pipe and manholes within the 81st Street Basin. The contract amount of $388,824.15 is divided into five annual payments. The Highland Sanitary Board has paid the first annual installment.
   2) RedZone has completed initial inspections of pipes and manholes in the 81st St Basin. Highland Public Works personnel have cleaned and/or located the pipes and manholes noted as incomplete during RedZone's initial inspections. RedZone returned to Highland in October 2019 to inspect those pipe segments and will be returning to Highland again in the next few months to finish the remaining inspections.

2. **Micro Flow Monitoring and Corrective Action Program**.

   a. **Program Objective**: Utilize flow monitoring technology developed by Stantec Consultants that allows area-velocity flow meters to be installed upstream in smaller diameter sewers with less fouling and maintenance problems. This provides valuable assistance in locating small diameter sewers with higher I/I. Further field work and analysis is required then to try to identify and correct a more specific source of the I/I.

   b. **Progress Made**:
      1) No additional micromonitoring work was performed since the last semi-annual status update in July 2019.

3. **Smoke Testing Deficiency Correction Program**.

   a. **Program Objective**: Utilizing deficiencies identified in the February 2009 Smoke Testing Study, correct the deficiencies to the extent practicable and reasonable and document/verify that corrections have taken place.

   b. **Progress Made**.
      1) The first project involves removing manhole covers with open pick holes and replacing them with closed pick hole manhole covers. Since the last semi-annual update in July 2019, no additional defective manhole covers were found or replaced.
      2) The second project involves correcting area drains on residential property that have been identified during smoke testing as being connected to the sanitary sewer system. This work has been placed on hold by the Board due to cost considerations.
      3) The third project consists of disconnecting storm drainage from the sanitary sewer system for commercial/industrial properties, primarily in Downtown Highland. To date, sixteen properties have completed disconnection work, eliminating a cumulative total of approximately 72,625 square feet of tributary area. Since the last semi-annual update in July 2019, no additional disconnection work has been performed.

Town of Highland, Indiana
Board of Sanitary Commissioners

Summary of Progress Made on the Three I/I Investigative Programs

July 31, 2020

1. RedZone Robotics, Inc.

a. **Program Objective**: Televise the entire 5th Street Basin sanitary sewer system and 81st Street Basin sanitary sewer system using digital, 360 deg camera; provide an evaluation of condition for each pipe and manhole; provide an asset management software system. Any observed active infiltration or potential infiltration, such as root intrusion or mineral deposits, will also be noted. Program provides another resource for continued I/I identification as well as identification and prioritization of necessary sewer repairs.

b. **Progress Made (5th Street Basin)**:
   1) All pipe segments in the 5th Street Basin have been inspected by RedZone and/or Highland Public Works personnel. All inspection videos have been added to the ICOM3 software platform.
   2) So far for 2020, no CIPP sewer lining in the 5th St Basin is planned; work for 2020 is focused on the 81st St Basin to address structural issues first.

c. **Progress Made (81st Street Basin)**:
   1) On September 4, 2018, The Highland Sanitary Board entered into a contract with RedZone Robotics, Inc. to inspect all sanitary sewer pipe and manholes within the 81st Street Basin. The contract amount of $388,824.15 is divided into five annual payments. The Highland Sanitary Board has paid through the third annual installment.
   2) RedZone has completed initial inspections of pipes and manholes in the 81st St Basin and has performed a part of the re-inspections. RedZone is expected to return to Highland on August 3, 2020 to complete the remaining re-inspections.
   3) Using the inspection information from segments that have been completed in the 81st Basin and incorporated into the ICOM3 software, Highland Public Works personnel have started a priority list of sewer replacement/repair/rehabilitation for 2020. An initial Work Order for 2020 CIPP sewer lining has been issued and work is currently underway. The initial Work Order estimate is $216,345.00 and includes the following estimated lengths of pipe to be lined, by size: 810 feet of 10-inch and 2,296 feet of 15-inch.

2. **Micro Flow Monitoring and Corrective Action Program**.

   a. **Program Objective**: Utilize flow monitoring technology developed by Stantec Consultants that allows area-velocity flow meters to be installed upstream in smaller diameter sewers with less fouling and maintenance problems. This provides valuable assistance in locating small diameter sewers with higher I/I. Further field work and analysis is required then to try to identify and correct a more specific source of the I/I.

   b. **Progress Made**:
      1) No additional micromonitoring work was performed since the last semi-annual status update in January 2020.

3. **Smoke Testing Deficiency Correction Program**.

   a. **Program Objective**: Utilizing deficiencies identified in the February 2009 Smoke Testing Study, correct the deficiencies to the extent practicable and reasonable and document/verify that corrections have taken place.

   b. **Progress Made**.
      1) The first project involves removing manhole covers with open pick holes and replacing them with closed pick hole manhole covers. Since the last semi-annual update in January 2020, no additional defective manhole covers were found or replaced.
      2) The second project involves correcting area drains on residential property that have been identified during smoke testing as being connected to the sanitary sewer system. This work has been placed on hold by the Board due to cost considerations.
      3) The third project consists of disconnecting storm drainage from the sanitary sewer system for commercial/industrial properties, primarily in Downtown Highland. To date, sixteen properties have completed disconnection work, eliminating a cumulative total of approximately 72,625 square feet of tributary area. Since the last semi-annual update in January 2020, no additional disconnection work has been performed.

Town of Highland, Indiana
Board of Sanitary Commissioners

Summary of Progress Made on the Three I/I Investigative Programs

January 31, 2021

1. RedZone Robotics, Inc.

a. **Program Objective**: Televise the entire 5th Street Basin sanitary sewer system and 81st Street Basin sanitary sewer system using digital, 360 deg camera; provide an evaluation of condition for each pipe and manhole; provide an asset management software system. Any observed active infiltration or potential infiltration, such as root intrusion or mineral deposits, will also be noted. Program provides another resource for continued I/I identification as well as identification and prioritization of necessary sewer repairs.

b. **Progress Made (5th Street Basin)**:
   1) All pipe segments in the 5th Street Basin have been inspected by RedZone and/or Highland Public Works personnel. All inspection videos have been added to the ICOM software platform.
   2) Utilizing RedZone's ICOM software, Highland Public Works personnel are in the process of updating the priority list of sewer replacement/repair/rehabilitation for 2021.

c. **Progress Made (81st Street Basin)**:
   1) On September 4, 2018, The Highland Sanitary Board entered into a contract with RedZone Robotics, Inc. to inspect all sanitary sewer pipe and manholes within the 81st Street Basin. The contract amount of $388,824.15 is divided into five annual payments. The Highland Sanitary Board has paid through the third annual installment.
   2) RedZone has completed initial inspections of pipes and manholes in the 81st St Basin and has performed a part of the re-inspections. RedZone returned to Highland in August 2020 to complete the remaining re-inspections. Work to reconcile any differences between RedZone information and existing Town atlas information is underway.
   3) Work Order #1 for 2020 CIPP sewer lining has been completed. The final Work Order amount for mainline lining was $231,582.80 and included the following lengths of pipe lining, by size: 1,060 feet of 10-inch and 2,277 feet of 15-inch. Work to line several defective lateral connections found in this area is complete.
   4) Utilizing RedZone's ICOM software, Highland Public Works personnel are in the process of updating the priority list of sewer replacement/repair/rehabilitation for 2021.

2. **Micro Flow Monitoring and Corrective Action Program**.

   a. **Program Objective**: Utilize flow monitoring technology developed by Stantec Consultants that allows area-velocity flow meters to be installed upstream in smaller diameter sewers with less fouling and maintenance problems. This provides valuable assistance in locating small diameter sewers with higher I/I. Further field work and analysis is required then to try to identify and correct a more specific source of the I/I.

   b. **Progress Made**:
      1) No additional micromonitoring work was performed since the last semi-annual status update in July 2020.

3. **Smoke Testing Deficiency Correction Program**.

   a. **Program Objective**: Utilizing deficiencies identified in the February 2009 Smoke Testing Study, correct the deficiencies to the extent practicable and reasonable and document/verify that corrections have taken place.

   b. **Progress Made**.
      1) The first project involves removing manhole covers with open pick holes and replacing them with closed pick hole manhole covers. Since the last semi-annual update in July 2020, no additional defective manhole covers were found or replaced.
      2) The second project involves correcting area drains on residential property that have been identified during smoke testing as being connected to the sanitary sewer system. This work has been placed on hold by the Board due to cost considerations.
      3) The third project consists of disconnecting storm drainage from the sanitary sewer system for commercial/industrial properties, primarily in Downtown Highland. To date, sixteen properties have completed disconnection work, eliminating a cumulative total of approximately 72,625 square feet of tributary area. Since the last semi-annual update in July 2020, no additional disconnection work has been performed.

Town of Highland, Indiana
Board of Sanitary Commissioners

Summary of Progress Made on the Three I/I Investigative Programs

July 31, 2021

1. RedZone Robotics, Inc.

a. **Program Objective**: Televise the entire 5th Street Basin sanitary sewer system and 81st Street Basin sanitary sewer system using digital, 360 deg camera; provide an evaluation of condition for each pipe and manhole; provide an asset management software system. Any observed active infiltration or potential infiltration, such as root intrusion or mineral deposits, will also be noted. Program provides another resource for continued I/I identification as well as identification and prioritization of necessary sewer repairs.

b. **Progress Made (5th Street Basin)**:
   1) All pipe segments in the 5th Street Basin have been inspected by RedZone and/or Highland Public Works personnel. All inspection videos have been added to the ICOM software platform.
   2) Utilizing RedZone's ICOM software, Highland Public Works personnel updated the priority list of sewer replacement/repair/rehabilitation for 2021. The Work Order for 2021 CIPP sewer lining was issued in May and work is underway. The initial Work Order estimate for 5th Street Basin work is $699,248.50 and includes the following estimated lengths of pipe to be lined, by size: 5,438 feet of 8-inch, 3,251 feet of 10-inch, 4,810 feet of 12-inch and 254 feet of 15-inch.

c. **Progress Made (81st Street Basin)**:
   1) On September 4, 2018, The Highland Sanitary Board entered into a contract with RedZone Robotics, Inc. to inspect all sanitary sewer pipe and manholes within the 81st Street Basin. The contract amount of $388,824.15 is divided into five annual payments. The Highland Sanitary Board has paid through the fourth annual installment.
   2) All pipe segments in the 81st Street Basin have been inspected by RedZone and/or Highland Public Works personnel. All inspection videos have been added to the ICOM software platform.
   3) Utilizing RedZone's ICOM software, Highland Public Works personnel updated the priority list of sewer replacement/repair/rehabilitation for 2021. The 2021 Work Order for CIPP sewer lining was issued in May and work is underway. The initial Work Order estimate for 81st Street Basin work is $300,689.00 and includes the following estimated lengths of pipe to be lined, by size: 913 feet of 8-inch, 47 feet of 10-inch, 1,946 feet of 12-inch and 1,854 feet of 15-inch.

2. **Micro Flow Monitoring and Corrective Action Program**.

   a. **Program Objective**: Utilize flow monitoring technology developed by Stantec Consultants that allows area-velocity flow meters to be installed upstream in smaller diameter sewers with less fouling and maintenance problems. This provides valuable assistance in locating small diameter sewers with higher I/I. Further field work and analysis is required then to try to identify and correct a more specific source of the I/I.

   b. **Progress Made**:
      1) No additional micromonitoring work was performed since the last semi-annual status update in January 2021.

3. **Smoke Testing Deficiency Correction Program**.

   a. **Program Objective**: Utilizing deficiencies identified in the February 2009 Smoke Testing Study, correct the deficiencies to the extent practicable and reasonable and document/verify that corrections have taken place.

   b. **Progress Made**.
      1) The first project involves removing manhole covers with open pick holes and replacing them with closed pick hole manhole covers. Since the last semi-annual update in January 2021, no additional defective manhole covers were found or replaced.
      2) The second project involves correcting area drains on residential property that have been identified during smoke testing as being connected to the sanitary sewer system. This work has been placed on hold by the Board due to cost considerations.
      3) The third project consists of disconnecting storm drainage from the sanitary sewer system for commercial/industrial properties, primarily in Downtown Highland. To date, sixteen properties have completed disconnection work, eliminating a cumulative total of approximately 72,625 square feet of tributary area. Since the last semi-annual update in January 2021, no additional disconnection work has been performed.

Town of Highland, Indiana
Board of Sanitary Commissioners

Summary of Progress Made on the Three I/I Investigative Programs

January 31, 2022

1. RedZone Robotics, Inc.

a. **Program Objective**: Televise the entire 5th Street Basin sanitary sewer system and 81st Street Basin sanitary sewer system using digital, 360 deg camera; provide an evaluation of condition for each pipe and manhole; provide an asset management software system. Any observed active infiltration or potential infiltration, such as root intrusion or mineral deposits, will also be noted. Program provides another resource for continued I/I identification as well as identification and prioritization of necessary sewer repairs.

b. **Progress Made (5th Street Basin)**:
   1) All pipe segments in the 5th Street Basin have been inspected by RedZone and/or Highland Public Works personnel. All inspection videos have been added to the ICOM software platform.
   2) Work Order #1 for 2021 CIPP sewer lining has been completed. The final Work Order amount for 5th Street Basin work was $699,104.00 and included the following lengths of pipe lining, by size: 6,970 feet of 8-inch, 1,604 feet of 10-inch, 4,799 feet of 12-inch and 247 feet of 15-inch.
   3) Utilizing RedZone's ICOM software, Highland Public Works personnel are in the process of updating the priority list of sewer replacement/repair/rehabilitation for 2022.

c. **Progress Made (81st Street Basin)**:
   1) On September 4, 2018, The Highland Sanitary Board entered into a contract with RedZone Robotics, Inc. to inspect all sanitary sewer pipe and manholes within the 81st Street Basin. The contract amount of $388,824.15 is divided into five annual payments. The Highland Sanitary Board has paid the final annual installment.
   2) All pipe segments in the 81st Street Basin have been inspected by RedZone and/or Highland Public Works personnel. All inspection videos have been added to the ICOM software platform.
   3) Work Order #1 for 2021 CIPP sewer lining has been completed. The final Work Order amount for 81st Street Basin work was $296,019.75 and included the following lengths of pipe lining, by size: 907 feet of 8-inch, 44 feet of 10-inch, 1,921 feet of 12-inch and 1,836 feet of 15-inch.
   4) Utilizing RedZone's ICOM software, Highland Public Works personnel are in the process of updating the priority list of sewer replacement/repair/rehabilitation for 2022.

2. **Micro Flow Monitoring and Corrective Action Program.**

   a. **Program Objective**: Utilize flow monitoring technology developed by Stantec Consultants that allows area-velocity flow meters to be installed upstream in smaller diameter sewers with less fouling and maintenance problems. This provides valuable assistance in locating small diameter sewers with higher I/I. Further field work and analysis is required then to try to identify and correct a more specific source of the I/I.

   b. **Progress Made**:
      1) No additional micromonitoring work was performed since the last semi-annual status update in July 2021.

3. **Smoke Testing Deficiency Correction Program**.

   a. **Program Objective**: Utilizing deficiencies identified in the February 2009 Smoke Testing Study, correct the deficiencies to the extent practicable and reasonable and document/verify that corrections have taken place.

   b. **Progress Made**.
      1) The first project involves removing manhole covers with open pick holes and replacing them with closed pick hole manhole covers. Since the last semi-annual update in July 2021, no additional defective manhole covers were found or replaced.
      2) The second project involves correcting area drains on residential property that have been identified during smoke testing as being connected to the sanitary sewer system. This work has been placed on hold by the Board due to cost considerations.
      3) The third project consists of disconnecting storm drainage from the sanitary sewer system for commercial/industrial properties, primarily in Downtown Highland. To date, sixteen properties have completed disconnection work, eliminating a cumulative total of approximately 72,625 square feet of tributary area. Since the last semi-annual update in July 2021, no additional disconnection work has been performed.

Town of Highland, Indiana
Board of Sanitary Commissioners

Summary of Progress Made on the Three I/I Investigative Programs

July 31, 2022

1. RedZone Robotics, Inc.

a. **Program Objective**: Televise the entire 5th Street Basin sanitary sewer system and 81st Street Basin sanitary sewer system using digital, 360 deg camera; provide an evaluation of condition for each pipe and manhole; provide an asset management software system. Any observed active infiltration or potential infiltration, such as root intrusion or mineral deposits, will also be noted. Program provides another resource for continued I/I identification as well as identification and prioritization of necessary sewer repairs.

b. **Progress Made (5th Street Basin)**:
   1) All pipe segments in the 5th Street Basin have been inspected by RedZone and/or Highland Public Works personnel. All inspection videos have been added to the ICOM software platform.
   2) Utilizing RedZone's ICOM software, Highland Public Works personnel are in the process of updating the priority list of sewer replacement/repair/rehabilitation for 2022.

c. **Progress Made (81st Street Basin)**:
   1) All pipe segments in the 81st Street Basin have been inspected by RedZone and/or Highland Public Works personnel. All inspection videos have been added to the ICOM software platform.
   2) Utilizing RedZone's ICOM software, Highland Public Works personnel are in the process of updating the priority list of sewer replacement/repair/rehabilitation for 2022.

2. **Micro Flow Monitoring and Corrective Action Program.**

   a. **Program Objective**: Utilize flow monitoring technology developed by Stantec Consultants that allows area-velocity flow meters to be installed upstream in smaller diameter sewers with less fouling and maintenance problems. This provides valuable assistance in locating small diameter sewers with higher I/I. Further field work and analysis is required then to try to identify and correct a more specific source of the I/I.

   b. **Progress Made**:
      1) No additional micromonitoring work was performed since the last semi-annual status update in January 2022.

3. **Smoke Testing Deficiency Correction Program**.

   a. **Program Objective**: Utilizing deficiencies identified in the February 2009 Smoke Testing Study, correct the deficiencies to the extent practicable and reasonable and document/verify that corrections have taken place.

   b. **Progress Made**.
      1) The first project involves removing manhole covers with open pick holes and replacing them with closed pick hole manhole covers. Since the last semi-annual update in January 2022, no additional defective manhole covers were found or replaced.
      2) The second project involves correcting area drains on residential property that have been identified during smoke testing as being connected to the sanitary sewer system. This work has been placed on hold by the Board due to cost considerations.
      3) The third project consists of disconnecting storm drainage from the sanitary sewer system for commercial/industrial properties, primarily in Downtown Highland. To date, sixteen properties have completed disconnection work, eliminating a cumulative total of approximately 72,625 square feet of tributary area. Since the last semi-annual update in January 2022, the Town has identified at least 1 acre of impervious area at the Highland Christian School (3040 Ridge Road) that is connected to the sanitary sewer system. This was discovered during the Town's review of proposed building and site improvements that triggered Town requirements for stormwater detention. A plan is currently being developed in coordination with the School to disconnect all stormwater connections from the sanitary sewer and to convey stormwater runoff for the entire site to a new on-site stormwater detention basin.

Google Earth Pro

File Edit View Tools Add Help

▼ Search

Search

ex: pizza near NYC

Get Directions History

▼ Places

- My Places
  - Sightseeing Tour
    - Make sure 3D Buildings layer is checked
  - Untitled Placemark
  - Untitled Placemark
  - Untitled Placemark
  - SWA_WaterSupplyRoute_with_JolietDelivery_20210...
  - Severs Road Water Main
  - Phase 2.kmz
    - Phase 2
      - B101
      - B102
      - B103
      - B104
      - B105
      - B106
      - B107
      - B108
      - B109
      - B110
      - B111
      - B112
      - B113
  - Temporary Places

▼ Layers

- Primary Database
  - Announcements
  - Borders and Labels
  - Places
  - Photos
  - Roads
  - 3D Buildings
  - Weather
  - Gallery
  - More
  - Terrain

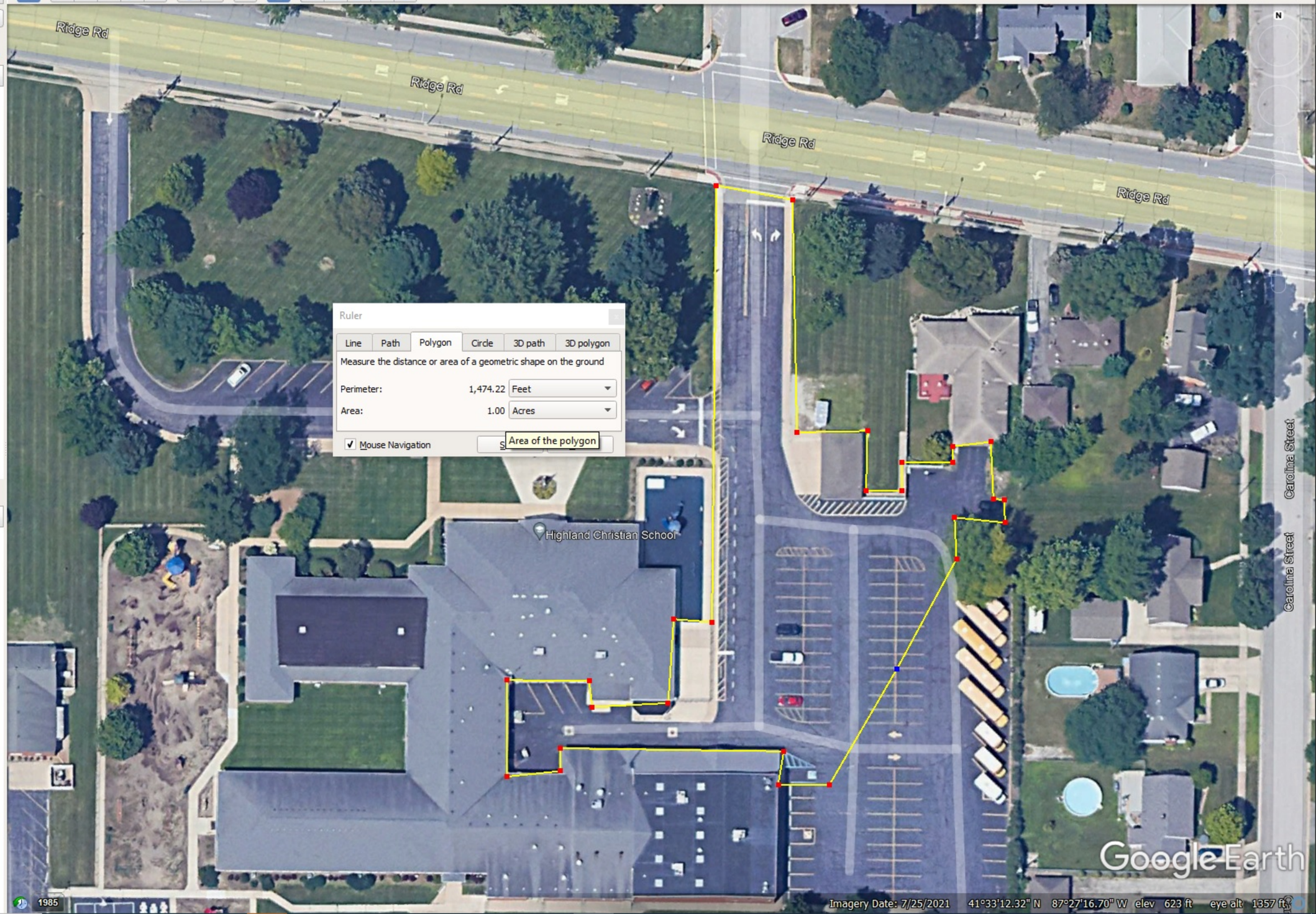

SANITARY DISTRICT OF HIGHLAND

Highland Municipal Building • 3333 Ridge Rd
Highland, Indiana 46322
219-838-1080 • Fax 219-972-5097

Incorporated in 1910

January 31, 2023

EES Case Management Unit
Environment and Natural Resources Division
U.S. Department of Justice
P.O. Box 7611
Washington, D.C. 20044-7611

Chief, Water Enforcement and Compliance Assurance Branch (WC-15J)
U.S. Environmental Protection Agency, Region V
77 W. Jackson Boulevard
Chicago, IL 60604

Chief, Environmental Section
Office of The Attorney General
Indiana Government Center South, 5th Floor
402 West Washington Street
Indianapolis, IN 46204

Chief, Compliance Branch
Office of Water Quality, Mail Code 65-40
Indiana Department of Environmental Management
100 N. Senate Avenue
Indianapolis, IN 46204-2251

Office of Legal Counsel
Mail Code 60-01
100 North Senate Street
Indianapolis, IN 46204-2251

RE Sanitary District of Highland
Consent Decree
Civil Action No. 2:22-cv-00086
January 2023 Semi-Annual Report

ATTN: United States Department of Justice
U.S. Environmental Protection Agency, Region 5
Indiana Attorney General
Indiana Department of Environmental Management

Pursuant to Section VIII of the above captioned Consent Decree (Decree) entered December 09, 2022, the Sanitary District of the Town of Highland, Indiana (Highland) hereby submits its Semi-Annual Report (Report) through January 31, 2023.

Describe the work, and associated deadlines, that Highland completed under the Decree during the preceding six-month period and include documentation (e.g. as-built diagrams, photographs, etc.) of the work and the deadlines met:

1. **SECTION VI: CIVIL PENALTY**

Within 60 days after the Effective Date, Highland shall pay a civil penalty in the amount of $87,500 to the United States and $87,500 to the State for the violations alleged against Highland in the Complaint, together with interest from the Date of Lodging of the Decree accruing at the rate specified in 28 U.S.C. § 1961 as of the Date of Lodging.

Deadline: February 7, 2023

Penalty due to the United States. On December 28, 2022, Highland paid the United States, by FedWire Electronic Funds Transfer, the amount of $88,512.86, per wire instructions provided by the US Attorney's office.

Penalty due to the State. On December 28, 2022, Highland paid the State, by check, the civil penalty in the amount of $87,500.00. On January 31, 2023, Highland paid the State, by check, interest on the civil penalty in the amount of $1,500.00.

The following items pertaining to the civil penalty are attached as **Exhibit A:**

1. Wire instructions for payment of civil penalty to the United States; wire confirmation evidencing payment of civil penalty to the United States; and notice of payment.
2. Copy of correspondence dated December 28, 2022 along with check for payment of civil penalty in the amount of $87,500 payable to the State.
3. Copy of correspondence dated January 30, 2023 along with check for payment of interest on civil penalty in the amount of $1,500 payable to the State.

2. **SECTION VII: COMPLIANCE REQUIREMENTS**

A. Implementing SSO Remedial Measures

Within 30 Days of the Effective Date, Highland shall begin implementing the SSO Remedial Measures Plan, as provided in Appendix A of the Decree.

Deadline: January 9, 2023

Highland began implementing the SSO Remedial Measures Plan prior to the Effective Date. On August 2, 2022, Highland advised USEPA & IDEM that Highland entered into a contract for professional services with Commonwealth Engineers, Inc. to complete engineering services associated with the SSO Remedial Project for (a) 30% design for sanitary sewer improvements for Phase 1, 2, 3 and (b) final design, bidding / negotiating, construction engineering, and resident project representative services for Phase 1, Division A. A kickoff meeting was held on January 18, 2022. A 30% design review meeting was held on June 7, 2022. As of date, surveying and geotechnical field work are complete. Work on the 60% design submittal for the Phase 1, Division A project is underway and on schedule to be complete by the middle of August.

Since the August 2, 2022 update, the design of the Phase 1, Division A Project progressed to 60% complete. A 60% design review meeting was held on September 15, 2022. Work on the 95% design submittal for the Phase 1, Division A project is underway and is on schedule to be complete by the middle of February, 2023. Highland anticipates that the project will be bid-ready with permits in time for the Indiana Finance Authority (IFA) State Revolving Fund (SRF) next fiscal cycle starting on July 1, 2023. The original schedule to finalize the project for bidding in March 2023 has been delayed since the IFA SRF did not place Highland's Phase 1 Division A in the fundable range for the current fiscal year ending on June 30, 2023. During the last six months, Highland has remained in contact with IFA SRF via a virtual meeting (held on October 14, 2022) and periodic email/phone correspondence in the event that pooled funding may become available during the current fiscal year.

The following items pertaining to the status of the Remedial Measures Plan are attached as **Exhibit B:**

1. Meeting notes for engineering design contract kickoff meeting
2. Meeting notes for the 30% design review meeting
3. Meeting notes for the 60% design review meeting

3. SECTION VII: COMPLIANCE REQUIREMENTS

B. SSO Flow Monitoring and Reporting Requirements

SSO Flow Monitors. *Within 30 Days of the Effective Date, or within 30 Days from the date of discovering any additional SSO Location, Highland shall install and operate flow monitoring technology at each SSO Location, if it has not already done so, in order to detect and record when an SSO may occur or actually occurs at each SSO Location and to Measure and record the volume of SSO discharged. To mitigate the adverse effect of any SSO, the flow monitoring device at each SSO Location shall instantaneously and automatically alert Highland to an SSO event. Highland shall install and operate the flow monitoring detailed in Section VII B at Paragraph 23 (a) and (b).*

Deadline: January 9, 2023.

As of the Effective Date, Highland is in compliance with its obligation to install and operate flow monitoring technology at each SSO Location as provided in Section VII of the Decree.

Reporting all SSO's. *Highland shall report all SSO's from its SSCS. This reporting shall include procedure detained in Section VII B at Paragraph 24 (a) and (b).*

As of the Effective Date, Highland is in compliance with its obligation to report all SSO's from its SSCS as provided in Section VII of the Decree.

Semi-Annual Overflow Logs. *By July 31st (for the reporting period of January – June) and January 31st (for the reporting period of July – December) of each year beginning the calendar year after the Decree is lodged, Highland shall submit copies of its final and completed electronic reports to IDEM and EPA using State Form 48373 for each SSO location at which an SSO occurred during the reporting period. Highland shall also complete and submit to IDEM and EPA the SSO reporting Table attached to the Decree as Appendix C for every SSO that occurred during the reporting period.*

This requirement begins the calendar year after the Decree is lodged. Accordingly, this requirement will not be due until the July 31, 2023 Semi-Annual Report.

4. SECTION VII: COMPLIANCE REQUIREMENTS
C. Miscellaneous Compliance Provisions

Capacity, Management Operation and Maintenance Plan (CMOM). On January 30, 2023, Highland submitted a revised draft CMOM to EPA and IDEM for review and approval.

Over Emergency Response Plan (OERP). On March 25, 2022, Highland was notified by the Department of Justice, via email, that its OERP was approved. Highland has begun implementing the OERP.

5. SECTION IX: PUBLIC WEBSITE

Within 30 days from the Effective Date, Highland shall have an operable Website for the posting of Decree Deliverables and the Consent Decree. Highland shall announce the availability of the Website by a press release, and the Town of Highland's official homepage, www.highland.in.gov, shall include a link to the Website. The Website may be a part of Highland's website on the Town of Highland's official website. All posted Deliverables shall be readily accessible, electronically searchable and accurately labeled. The Website shall include: the Consent Decree; Consent Decree Submissions; SSO Public Notification; and Other Public Presentations and Education Materials.

Deadline: January 9, 2023.

As of January 9, 2023, Highland maintains an operable Website which meets the requirements of Section IX of the Decree. The website can be accessed directly at: *highland.in.gov/sanitary-district/highland-consent-decree*. On January 27, 2023, Highland announced the availability of the Website via a press release.

The following items pertaining to Highland's public Website are attached as **Exhibit C:**

1. Image of Highland's Website as of January 31, 2023.
2. Copy of press release announcing the availability of Highland's Website and accompanying email transmittal dated January 27, 2023.

Describe any non-compliance with any requirement of the Decree, explaining the reasons for any non-compliance and the remedial steps taken, or to be taken, to minimize such non-compliance or prevent its recurrence.

As of the date of the date of this Report, Highland is not aware of any non-compliance with any requirement of the Decree.

I CERTIFY UNDER PENALTY OF LAW THAT THIS DOCUMENT AND ALL ATTACHMENTS WERE PREPARED UNDER MY DIRECTION OR SUPERVISION IN ACCORDANCE WITH A SYSTEM DESIGNED TO ASSURE THAT QUALIFIED PERSONNEL PROPERTY GATHER AND EVALUATE THE INFORMATION SUBMITTED. BASED ON MY INQUIRY OF THE PERSON OR PERSONS WHO MANAGE THE SYSTEM, OR THOSE PERSONS DIRECTLY RESPONSIBLE FOR GATHERING THE INFORMATION, THE INFORMATION SUBMITTED IS, TO THE BEST OF MY KNOWLEDGE AND BELIEF, TRUE, ACCURATE, AND COMPLETE. I HAVE NO PERSONAL KNOWLEDGE THAT THE INFORMATION SUBMITTED IS OTHER THAN TRUE, ACCURATE, AND COMPLETE. I AM AWARE THAT THERE ARE SIGNIFICANT PENALTIES FOR SUBMITTING FALSE INFORMATION, INCLUDING THE POSSIBILITY OF FINE AND IMPRISONMENT FOR KNOWING VIOLATIONS.

Mark Knesek

CC: Highland Sanitary Board
Robert F. Tweedle
Susan Franzetti
Alison McGregor – USDOJ
Andre Daugavietis – USEPA
Keith Middleton – USEPA
Ryan Bahr - USEPA
Beth Admire – IDEM

SANITARY DISTRICT OF HIGHLAND

Highland Municipal Building • 3333 Ridge Rd
Highland, Indiana 46322
219-838-1080 • Fax 219-972-5097

Incorporated in 1910

July 31, 2023

EES Case Management Unit
Environment and Natural Resources Division
U.S. Department of Justice
P.O. Box 7611
Washington, D.C. 20044-7611

Chief, Water Enforcement and Compliance Assurance Branch (WC-15J)
U.S. Environmental Protection Agency, Region V
77 W. Jackson Boulevard
Chicago, IL 60604

Chief, Environmental Section
Office of The Attorney General
Indiana Government Center South, 5th Floor
402 West Washington Street
Indianapolis, IN 46204

Chief, Compliance Branch
Office of Water Quality, Mail Code 65-40
Indiana Department of Environmental Management
100 N. Senate Avenue
Indianapolis, IN 46204-2251

Office of Legal Counsel
Mail Code 60-01
100 North Senate Street
Indianapolis, IN 46204-2251

RE Sanitary District of Highland
Consent Decree
Civil Action No. 2:22-cv-00086
July 2023 Semi-Annual Report

ATTN: United States Department of Justice
U.S. Environmental Protection Agency, Region 5
Indiana Attorney General
Indiana Department of Environmental Management

Pursuant to Section VIII of the above captioned Consent Decree (Decree) entered December 09, 2022, the Sanitary District of the Town of Highland, Indiana (Highland) hereby submits its Semi-Annual Report (Report) through July 31, 2023.

Describe the work, and associated deadlines, that Highland completed under the Decree during the preceding six-month period and include documentation (e.g. as-built diagrams, photographs, etc.) of the work and the deadlines met:

1. **SECTION VI: CIVIL PENALTY**

Within 60 days after the Effective Date, Highland shall pay a civil penalty in the amount of $87,500 to the United States and $87,500 to the State for the violations alleged against Highland in the Complaint, together with interest from the Date of Lodging of the Decree accruing at the rate specified in 28 U.S.C. § 1961 as of the Date of Lodging.

Deadline: February 7, 2023

Highland has complied with the penalty requirement. Accordingly, this requirement shall be removed from future Semi-Annual Reports.

2. **SECTION VII: COMPLIANCE REQUIREMENTS**

A. Implementing SSO Remedial Measures

Within 30 Days of the Effective Date, Highland shall begin implementing the SSO Remedial Measures Plan, as provided in Appendix A of the Decree.

Remedial Measures Plan: Phase I Division A Project
Deadline: February 28, 2025

Since the January 31, 2023 Report, the design of the Phase 1, Division A Project progressed to final design. A 95% design review meeting was held on February 2, 2023 (see attached meeting notes), and the contract documents were updated in March 2023 for permit applications. All permits have been obtained for the Phase 1, Division A Project. The IDEM Notice of Intent to Construct a Water Main Extension was approved on May 13, 2023. The IDEM Stormwater Pollution Prevention Plan was approved on June 12, 2023. The IDEM Sanitary Sewer Construction Permit was approved on June 29, 2023. The contract documents for the Phase 1, Division A Project are ready for bidding upon Highland confirming schedules for advertising. Highland anticipates completing bidding and issuing notice to proceed in November, 2023.

Regarding the Phase 1, Division B & C Projects, a proposal for professional services was submitted to the Sanitary Board for their review on April 24, 2023 related to final design, permits, field work, utility coordination, easements, bidding, construction engineering, resident project representation, and funding coordination.

The Indiana Finance Authority State Revolving Fund released the draft project priority list on July 6, 2023, and the Phase 1, Division A Project was not in the fundable range and ranked 61st out of 89 small system projects. Accordingly, Highland will not pursue SRF financing for the Phase 1 Division A Project. Highland intends to obtain financing through the Indiana Bond Bank. The current financing timetable anticipates that closing will take place at the end of September, 2023.

The following items pertaining to the status of the Remedial Measures Plan are attached as **Exhibit A:**

1. Meeting notes for the 95% design review meeting.

3. SECTION VII: COMPLIANCE REQUIREMENTS
B. SSO Flow Monitoring and Reporting Requirements

SSO Flow Monitors. *Within 30 Days of the Effective Date, or within 30 Days from the date of discovering any additional SSO Location, Highland shall install and operate flow monitoring technology at each SSO Location, if it has not already done so, in order to detect and record when an SSO may occur or actually occurs at each SSO Location and to Measure and record the volume of SSO discharged. To mitigate the adverse effect of any SSO, the flow monitoring device at each SSO Location shall instantaneously and automatically alert Highland to an SSO event. Highland shall install and operate the flow monitoring detailed in Section VII B at Paragraph 23 (a) and (b).*

Deadline: January 9, 2023.

As of the date of this Report, Highland is in compliance with its obligation to install and operate flow monitoring technology at each SSO Location as provided in Section VII of the Decree.

Reporting all SSO's. *Highland shall report all SSO's from its SSCS. This reporting shall include procedure detained in Section VII B at Paragraph 24 (a) and (b).*

As of the date of this Report, Highland is in compliance with its obligation to report all SSO's from its SSCS as provided in Section VII of the Decree.

Semi-Annual Overflow Logs. *By July 31st (for the reporting period of January – June) and January 31st (for the reporting period of July – December) of each year beginning the calendar year after the Decree is lodged, Highland shall submit copies of its final and completed electronic reports to IDEM and EPA using State Form 48373 for each SSO location at which an SSO occurred during the reporting period. Highland shall also complete and submit to IDEM and EPA the SSO reporting Table attached to the Decree as Appendix C for every SSO that occurred during the reporting period.*

Highland's Semi-Annual Overflow Log for the reporting period of January – June, 2023 is attached as **Exhibit B**. The Semi-Annual Overflow Log has also been posted on the Town website.

4. SECTION VII: COMPLIANCE REQUIREMENTS
C. Miscellaneous Compliance Provisions

Capacity, Management Operation and Maintenance Plan (CMOM). On January 30, 2023, Highland submitted a revised draft CMOM to EPA and IDEM for review and approval.

Over Emergency Response Plan (OERP). On March 25, 2022, Highland was notified by the Department of Justice, via email, that its OERP was approved. Highland has begun implementing the OERP.

5. SECTION IX: PUBLIC WEBSITE

Within 30 days from the Effective Date, Highland shall have an operable Website for the posting of Decree Deliverables and the Consent Decree. Highland shall announce the availability of the Website by a press release, and the Town of Highland's official homepage, www.highland.in.gov, shall include a link to the Website. The Website may be a part of Highland's website on the Town of Highland's official website. All posted Deliverables shall be readily accessible, electronically searchable and accurately labeled. The Website shall include: the Consent Decree; Consent Decree Submissions; SSO Public Notification; and Other Public Presentations and Education Materials.

Deadline: January 9, 2023.

As of the date of this Report, Highland maintains an operable Website which meets the requirements of Section IX of the Decree. The website can be accessed directly at: *highland.in.gov/sanitary-district/highland-consent-decree*. Highland continues to update the website with Consent Decree Submissions, SSO Public Notifications and Other Public Presentations and Educational Materials.

Describe any non-compliance with any requirement of the Decree, explaining the reasons for any non-compliance and the remedial steps taken, or to be taken, to minimize such non-compliance or prevent its recurrence.

As of the date of the date of this Report, Highland is not aware of any non-compliance with any requirement of the Decree.

I CERTIFY UNDER PENALTY OF LAW THAT THIS DOCUMENT AND ALL ATTACHMENTS WERE PREPARED UNDER MY DIRECTION OR SUPERVISION IN ACCORDANCE WITH A SYSTEM DESIGNED TO ASSURE THAT QUALIFIED PERSONNEL PROPERTY GATHER AND EVALUATE THE INFORMATION SUBMITTED. BASED ON MY INQUIRY OF THE PERSON OR PERSONS WHO MANAGE THE SYSTEM, OR THOSE PERSONS DIRECTLY RESPONSIBLE FOR GATHERING THE INFORMATION, THE INFORMATION SUBMITTED IS, TO THE BEST OF MY KNOWLEDGE AND BELIEF, TRUE, ACCURATE, AND COMPLETE. I HAVE NO PERSONAL KNOWLEDGE THAT THE INFORMATION SUBMITTED IS OTHER THAN TRUE, ACCURATE, AND COMPLETE. I AM AWARE THAT THERE ARE SIGNIFICANT PENALTIES FOR SUBMITTING FALSE INFORMATION, INCLUDING THE POSSIBILITY OF FINE AND IMPRISONMENT FOR KNOWING VIOLATIONS.

Mark Knesek

CC: Highland Sanitary Board
Robert F. Tweedle
Susan Franzetti
Alison McGregor – USDOJ
Andre Daugavietis – USEPA
Keith Middleton – USEPA
Ryan Bahr - USEPA
Beth Admire – IDEM

ATTACHMENT F

HIGHLAND OVERFLOW EMERGENCY RESPONSE PLAN

January 2024

OVERFLOW EMERGENCY RESPONSE PLAN

October 2011

Revised December 2021

Prepared by:

NIES engineering, inc.

2421 173rd Street, Hammond, Indiana 46323
Phone: (219) 844-8680 Fax: (219) 844-7754

TABLE OF CONTENTS

LIST OF ABBREVATIONS

Page

I. AUTHORITY 1

II. GENERAL 1
- A. Introduction 1
- B. Definitions 1
- C. Goals and Objectives 2

III. OVERFLOW RESPONSE PROCEDURE 3
- A. Receipt of Information Regarding an SSO 3
- B. Dispatch of Appropriate Crews to Site of Sewer Overflow 4
- C. Overflow Correction, Containment, Mitigation & Cleanup 7
  - 1. Property Backup and SSO Procedures 8

IV. PUBLIC ADVISORY PROCEDURE 10
- A. Temporary Signage 10
- B. Other Public Notification 11

V. REGULATORY NOTIFICATION PROCEDURE 11
- A. Immediate Notification to Lake County for SSO 11
- B. Notification if Fish Kill or Acute Injury to Fish or Wildlife is Observed 12
- C. At Conclusion of SSO Event 12
- D. Written Report to IDEM Within 5 Calendar Days 12

VI. DISTRIBUTION AND MAINTENANCE OF OERP 12
- A. Availability of OERP 12
- B. Training 13
- C. Review and Update 13
- D. Regulatory Contact Information 13
- E. Town Staff Contact Information 14

EXHIBITS

EXHIBIT A – SANITARY SEWER SYSTEM INCIDENT REPORT
EXHIBIT B – SAMPLE WARNING SIGNS
EXHIBIT C – IDEM BYPASS / OVERFLOW INCIDENT REPORT
EXHIBIT D – RESOURCES TO ESTIMATE SSO VOLUME

LIST OF ABBREVIATIONS

CCTV	Closed Circuit Television
County	Lake County Indiana Health Department
GAL	Gallons
GPM	Gallons Per Minute
HSD	Highland Sanitary District
IDEM	Indiana Department of Environmental Management
MGD	Million Gallons Per Day
NPDES	National Pollutant Discharge Elimination System
OSHA	Occupational Safety and Health Administration
OERP	Overflow Emergency Response Plan
SSO	Sanitary Sewer Overflow
Town	Town of Highland, Indiana
USEPA	U.S. Environmental Protection Agency

Highland Sanitary District

Overflow Emergency Response Plan

I. AUTHORITY

This Overflow Emergency Response Plan (OERP) addresses the requirements of paragraphs 25 and 26 of the USEPA Amended Order for Compliance, Docket No. V-W-11-AO-07, dated August 10, 2011.

II. GENERAL

A. Introduction

The Highland Sanitary District (HSD) operates and manages a separate sanitary sewer collection system and conveys sanitary wastewater to the Hammond Sanitary District (Hammond) for treatment from the North 5th Street Sanitary Sewer Lift Station and the 81st Street Sanitary Sewer Lift Station. The current contractual limit (rate) with Hammond is 7.5 MGD. The total pumping capacity is 15.7 MGD. However, because HSD regularly needs to send Hammond more than the 7.5 MGD contracted amount, HSD and Hammond have agreed to make improvements to their sewer systems to allow HSD to send additional flow to Hammond for treatment. Once Hammond and HSD have made the necessary improvements to their sewer systems, HSD will be sending Hammond a maximum peak flow of 25 MGD from the North 5th Street Lift Station and a maximum peak flow of 7.2 MGD from the 81st Street Lift Station for a total of 32.2 MGD.

Studies have determined that inflow/infiltration within the sanitary sewer collection system, from both private and public sources, is the major contributing factor to sanitary sewer system surcharging.

B. Definitions

"Sanitary Sewer Overflow" or "SSO" means an overflow, spill, release, or diversion of wastewater from a sanitary sewer system, including interceptor sewers. An SSO includes an overflow of wastewater, including a wastewater

backup in a building (other than a backup caused solely by a blockage or other malfunction in a privately owned sewer or building lateral), even if that overflow does not reach waters of the United States.

"Property Backup" means wastewater backups into buildings that are caused by blockages or flow conditions in a sanitary sewer other than a privately owned sewer or building lateral. Property Backup does not include the backup caused by a blockage or other malfunction in the privately owned sewer or building lateral sewer.

"Person-in-Charge" or "PIC" means the senior Public Works Department staff member on duty during regular operating hours or the person on call during off duty hours.

"Private Lateral Sewage Discharges" means sewage discharges that are caused by blockages or other problems within a privately-owned sewer or building lateral.

C. Goals and Objectives

The primary goal of the Overflow Emergency Response Plan (OERP) is to create an action plan which defines procedures for managing SSO's to protect public health and the environment, and to comply with regulatory requirements relating to SSO's. Specific objectives with respect to responding to SSO's are:

- Eliminate preventable SSO's.
- Respond quickly to minimize impact, duration and volume of the SSO.
- Provide accurate estimates to the volume of the SSO.
- Ensure corrective action is taken in a timely manner.
- Notify the proper regulatory agencies and the public, in a timely manner, of any SSO.
- Identify and implement measures to prevent the occurrence of preventable and chronic SSO's.
- Document and define procedures to address SSO prevention and response.
- Provide uniform, clear, and consistent policies and procedures for Town Staff to reference and follow in the event of an SSO.

III. OVERFLOW RESPONSE PROCEDURE

The Overflow Response Procedure provides a strategy for the HSD to mobilize labor, materials, tools and equipment to correct, repair or mitigate any condition which may cause or contribute to an unpermitted discharge. The plan considers a wide range of potential system failures that could create an overflow to surface waters, land or buildings.

A. Receipt of Information Regarding an SSO

Confirmed or suspected SSOs may be reported by Town employees or by others (e.g., business owners, residents, plumbers, etc.) by calling the Highland Public Works Department at (219) 972-5083. The Public Works Dispatch Clerk is primarily responsible for receiving phone calls regarding possible sewer overflows during regular business hours (i.e., Monday through Friday from 7:00 am to 4:00 pm) and is responsible for notifying the Person-In-Charge (PIC) to respond to any given field situation. After regular business hours, the phone message system directs callers to either leave a voicemail message or to hang up and call 911 to report an emergency. If the caller leaves a voicemail message, the Dispatch Clerk logs the voicemail message and notifies the PIC on the following business day. If the caller calls 911, the 911 Dispatcher notifies the on-call PIC immediately. The 911 Dispatcher uses the on-call list provided by the Public Works Director on a monthly (or more frequent, as needed) basis. On-call staff are required to keep cell phones on and respond promptly.

The PIC is then responsible as a primary responder to notify the regulatory agencies, activate and monitor the Spill Response Crew and ensure that a report for the spill is prepared.

1. The Public Works Dispatch Clerk or 911 Dispatcher obtains all relevant information available regarding the overflow, including:

    - Time and date call was received;
    - Caller's name and phone number;
    - Specific location of overflow and where it flowed (e.g., water body, storm sewer, grassy area, private property);
    - Description of problem causing the overflow;
    - Time possible overflow was noticed by the caller;

- Observations of the caller (e.g., odor, duration, back or front of property); and
- Other relevant information that will enable the responding investigator and crews, if required, to quickly locate, assess and stop the overflow.

The Public Works Dispatch Clerk or 911 Dispatcher records initial information on the Sanitary Sewer System Incident Report (Exhibit A) and notifies the PIC.

2. Sanitary pump station failures are monitored and received by the Operator on Duty through the Highland Sanitary District's Supervisory Control and Data Acquisition (SCADA) system. The Operator on Duty immediately conveys all information regarding alarms to the PIC to initiate the investigation.

3. Sewer overflows detected by any Town personnel in the course of their normal duties are reported immediately to the Public Works Dispatch Clerk (during business hours) or the 911 Dispatcher (after hours).

The Spill Response Crew Supervisor completes the Sanitary Sewer System Incident Report (Exhibit A) within 24 hours of the sewer overflow confirmation. The PIC is responsible for reviewing, updating and signing the report. The complete report will be forwarded to the Sanitary District Superintendent and placed in the Spill Response Binder.

If the overflow affects any surface water, the PIC shall report to the Lake County Health Department within one hour of becoming aware of the discharge.

If the overflow results in an observed fish kill, the PIC shall report to the IDEM Emergency Response Spill Line within one hour of becoming aware of the fish kill.

All spills shall be reported to IDEM in accordance with 327 IAC 2-6.1.

B. Dispatch of Appropriate Crews to Site of Sewer Overflow

Failure of any element within the wastewater collection system that threatens to cause or causes an SSO triggers an immediate response to isolate and

correct the problem. Crews and equipment are available to respond to any SSO location. Crews shall dispatch to any site of a reported SSO immediately. Also, additional maintenance personnel shall be "on-call" in the event extra crews are needed.

1. Dispatching Spill Response Crew

- When the PIC receives notification of a potential sewer overflow outlined in Section A of the Overflow Response Procedure, the Spill Response Crew is dispatched, comprised of at least a two-person crew utilizing both the Vacuum Truck and Water/Sewer Utility Truck (Truck 10). The Vacuum Truck is equipped to jet/clean sewer lines and collect wastewater/debris. Truck 10 is equipped with a generator; hydraulically operated sewage pump with hose; air compressor with tools; confined space tripod system; shovels, brooms and various hand tools; repair supplies; work lights; traffic control devices; personal protective equipment (PPE); and other appropriate resources as required.
- PIC notifies the appropriate manager or supervisor by cell phone, pager or public works radio regarding the sewer overflow and field crew locations.

2. Crew Instructions and Work Orders

- Spill Response Crew shall be dispatched by cell phone, pager or public works radio and receive instructions from their supervisors regarding appropriate crews, materials, supplies, and equipment needed.
- PIC verifies that the entire message has been received and acknowledged by the crews who were dispatched. All standard communications procedures shall be followed. All employees being dispatched to the site of an SSO shall proceed immediately to the site of the overflow. Any delays or conflicts in assignments shall be immediately reported to the supervisor for resolution.
- In all cases the Spill Response Crew reports their findings, including possible damage to private and public property, to the PIC immediately upon making their investigation. If the PIC has not received findings from the field crew within one hour, the PIC contacts the response crew to determine the status of the investigation.

3. Additional Resources

- The PIC receives and conveys to appropriate parties, requests for additional personnel, material, supplies, and equipment from crews working at the site of the sewer overflow.

4. Preliminary Assessment of Damage to Private and Public Property

- The focus is to resolve the problem. The Spill Response Crew shall use discretion in assisting the property owner/occupant as reasonably as they can. They must be aware that the HSD could face increased liability for any further damages inflicted to private property during such assistance unless authorized by the PIC. The Spill Response Crew shall take appropriate still photographs of the area involved or impacted by the SSO or Property Backup in order to thoroughly document the nature and extent of impacts and shall forward available photographs to the PIC for filing with the Sanitary Sewer System Incident Report (Exhibit A). The final report and any attachments thereto shall be scanned and filed electronically as a backup to the paper record.
- In cases involving private property accidents, including bodily injury of a private citizen, sewer back-ups, or substantial private property damage, contact the Sanitary District Superintendent who will be responsible for notifying the Town's Insurance carrier.

5. Field Supervision and Inspection

- The PIC visits the site of the overflow, if possible, to ensure that provisions of this OERP and other directives are met.
- The PIC is responsible for confirming that the Sanitary Sewer System Incident Report (Exhibit A) is provided for reporting within the specified time.

6. Coordination with Hazardous Material Response

- Upon arrival at the scene of a sewer overflow, should a suspicious substance (e.g., oil sheen, foamy residue) be found on the ground surface, or should a suspicious odor (e.g., gasoline) not common to the sewer system be detected, the Spill Response Crew shall immediately contact the PIC for guidance before taking further action.

- Should the PIC determine the need to alert the hazardous material team, he shall notify the Fire Department and the response crew shall await the arrival of the Fire Department Chief to take over the scene. **Remember that any vehicle engine, portable pump or open flame (e.g., cigarette lighter) can provide the ignition for an explosion or fire, should flammable fluids or vapors be present. Keep a safe distance and observe caution until assistance arrives. Keeping the public away from the hazard is the first priority.**
- Only when the Fire Chief determines it is safe and appropriate for the Spill Response Crew to proceed, can they then proceed under the OERP with the containment, clean-up activities and correction.

C. Overflow Correction, Containment, Mitigation and Clean-Up

Sewer Overflows of various volumes occur from time to time in spite of concerted prevention efforts. Spills may result from blocked sewers, pipe failures, mechanical malfunctions or other natural or man-made causes. This section describes specific actions to be performed by the crews during an SSO. The objectives of these actions are:

- To protect public health, environment and property from sewage overflows by correcting the condition causing the overflow and restoring surrounding area back to normal as soon as possible;
- To establish perimeters and control zones with appropriate traffic cones and barricades, vehicles or use of natural topography (e.g., hills, berms) to secure the area and protect the public;
- To establish containment of the spill to limit any release of sewage to surface waters and/or the environment;
- To promptly notify the Sanitary District Superintendent of preliminary overflow information and potential impacts;
- To provide spill cleanup whenever possible; and
- To minimize the Highland Sanitary District's exposure to any regulatory agency penalties and fines.

Under most circumstances, the Town's Public Works Department can handle all response actions with its own maintenance forces. Public Works personnel have the skills and experience to respond rapidly and in the most appropriate manner. An important issue with respect to an emergency response is to ensure that the temporary actions necessary to divert flows and repair the problem do not produce a problem elsewhere in the system. For

example, when a large sewer main is blocked and the crews divert the flow to a smaller sewer pipe downstream of the blockage, they should observe the flows to ensure that the blockage does not recur downstream. The sewer conveyance system should be returned to the normal operation as soon as the blockage is removed.

1. Property Backup and SSO Procedures

Whenever there is a report of a Property Backup or SSO, the Spill response crew shall use the following procedures:

a. Responsibilities of Spill Response Crew Upon Arrival

It is the responsibility of the first personnel who arrive at the site of a sewer overflow to mitigate the impact of the overflow to public health and safety to the extent possible. Should the overflow not be the responsibility of the HSD but there is imminent danger to public health, public or private property, or to the quality of waters of the U.S., then prudent emergency action shall be taken until the responsible party assumes responsibility and provides actions. Upon arrival at an SSO, the response crew should do the following:

- Determine the cause of the overflow, e.g. sewer line blockage, pump station mechanical or electrical failure, sewer line break, etc.;
- Identify and request, if necessary, assistance or additional resources to correct the overflow or to assist in the determine of its cause;
- Determine if private property is impacted. If yes, refer to Chapter III – Section B – Part 4;
- Take immediate steps to stop the overflow, e.g. relieve pipeline blockage, manually operate pump station controls, repair pipe, etc. Extraordinary steps may be considered where overflows from private property threaten public health and safety (e.g., an overflow running off of private property into the public right-of-way);
- Request additional personnel, materials, supplies, or equipment that will expedite and minimize the impact of the overflow.

b. Initial Measures for Containment

Spill Response Crew shall initiate measures to contain the overflowing sewage and recover, where possible, sewage which has already been discharged, minimizing impact to public health or the environment.

- Determine the immediate destination of the overflow, e.g. storm drain, street curb gutter, body of water, creek bed, etc.;
- Investigate the extent of the spill, check storm drain maps and determine how far downstream the SSO traveled and whether it reached surface waters;
- Identify and request the necessary materials and equipment to contain or isolate the overflow, if not readily available; and
- Take immediate steps to contain the overflow, e.g., block or bag storm drains, recover through vacuum truck, divert into downstream sanitary manhole, etc.

c. Additional Measures Under Potentially Prolonged Overflow Conditions

In the event of a prolonged sewer line blockage or a sewer line collapse, set up a portable by-pass pumping operation around the obstruction that discharges (whenever possible) into a downstream portion of the sanitary sewer system.

- Take appropriate measures to determine the proper size and number of pumps required to effectively handle the sewage flow.
- Implement continuous or periodic monitoring of the by-pass pumping operation as required.
- Report all such conditions in accordance with the CD and state and federal law.

d. Cleanup

Sewer overflow sites are to be thoroughly cleaned after an overflow. No readily identified residue (e.g., sewage solids, papers, rags, plastics, rubber products) is to remain.

- Whenever possible, digital photos shall be taken of the area before and after the cleanup.

- The overflow site is to be secured to prevent contact by members of the public until the site has been thoroughly cleaned. If posting is required, it shall be undertaken as described in Section IV.
- Where practical, any ponding wastewater and sewage-related debris is to be collected by vacuum truck until pumped dry in order to minimize human exposure.
- Following initial collection, the area is to be thoroughly flushed and cleaned of remaining residue, and resulting wash-down water shall be recovered by vacuum truck for proper disposal.
- Where the area is inaccessible to vacuum truck, solids and debris are to be collected (e.g. swept, raked or picked-up, and transported for proper disposal.
- Where appropriate, the hard surface area of the overflow site shall be disinfected and deodorized. However, chlorine bleach shall not be used if the area is near or discharges into a body of water that may contain fish or other aquatic life or if the area drains to storm sewers.
- Document the impacts of the SSO/Property Backup to private or public property (consider the use of photographs or video, where appropriate).

e. Submit Report.

At the conclusion of the SSO event, the PIC shall ensure that the Spill Response Crew Supervisor submits a Sanitary Sewer System Incident Report (Exhibit A) to the Sanitary District Superintendent within 24 hours following the SSO event.

IV. PUBLIC ADVISORY PROCEDURE

This section describes the actions the HSD takes, in cooperation with the Lake County Health Department, to limit public access to areas potentially impacted by unpermitted discharges of pollutants to surface water bodies from the wastewater collection system.

A. Temporary Signage

The HSD will coordinate with Lake County Health Department to determine when to post notices of polluted surface water bodies or ground surfaces that result from uncontrolled wastewater discharges from its facilities. The

postings do not necessarily prohibit use of recreational areas, unless posted otherwise, but provide a warning of potential public health risks due to sewage contamination.

Creeks, streams, and other Public Access locations that have been contaminated as a result of an SSO should be posted at visible access locations until the risk of contamination has subsided to acceptable background levels.

The warning signs, once posted, should be checked every day to ensure that they are still in place. "Closed" signs shall be posted at the outfall and a minimum of 100 feet upstream and 100 feet downstream of the discharge. If there is a large volume of sewage, more signs must be posted downstream.

Signs must remain posted for 72 hours following the end of an SSO event, or longer if required by the Lake County Health Department.

The Sanitary District Superintendent shall determine if posting of a confirmed overflow is undertaken. See Exhibit B – Sample Warning Signs.

B. Other Public Notification

Should the posting of surface water bodies or ground surfaces subjected to a sewer overflow be deemed necessary by Lake County Health Department, the Sanitary District Superintendent shall determine the need for further public notification through the use of pre-scripted notices made available to the printed or electronic news media for immediate publication or airing, or by other measures (e.g., front door hangers).

V. REGULATORY NOTIFICATION PROCEDURE

This section establishes procedures which the HSD follows to provide formal notice to regulatory agencies in the event of SSO's.

A. Immediate Notification to Lake County for SSO

Immediately (within one hour) contact the Lake County Health Department at (219) 755-3655 and advise that the Highland Sanitary District is experiencing an SSO, giving the location, receiving water, and estimated volume of SSO.

B. Notification if Fish Kill or Acute Injury to Fish or Wildlife is Observed

Immediately (within one hour of observing a fish kill or acute injury to fish or wildlife) contact the IDEM, Emergency Response Spill Line at (888) 233-7745, and advise that the Highland Sanitary District is experiencing an SSO that may have resulted in an observed fish kill or acute injury to fish or wildlife. Provide the location, receiving water and estimated volume of SSO.

C. At Conclusion of SSO

PIC shall insure that written reports, as required in Section III. C., are submitted to the Sanitary District Superintendent within 24 hours following the SSO.

D. Written Report to IDEM Within 5 Calendar Days.

Within five (5) calendar days, the Sanitary District Superintendent or designee shall file a written report to the IDEM, by facsimile at 1-317-232-8637 or by email at wwreports@IDEM.IN.gov, with a copy to the USEPA, Region 5. The report shall be on forms (Exhibit C) provided by the IDEM and include the following:

- Location of the SSO;
- The receiving water, if any;
- Estimated volume of the SSO (See Exhibit D);
- Description of the sewer component from which the release occurred;
- Estimated date and time when the overflow began and stopped or will be stopped;
- Caused or suspected cause of the overflow;
- Steps to be taken to reduce, eliminate, and prevent reoccurrence of the overflow and schedule of major milestones for those steps;
- Steps taken or planned to mitigate the impact(s) of the overflow and a schedule of milestones for those steps.

VI. DISTRIBUTION AND MAINTENANCE OF OERP

A. Availability of OERP

Copies of the OERP shall be held at the Highland Public Works Facility in the office of the Public Works Director. Copies of the OERP shall also be kept in

the vehicles routinely used to respond to SSO events (Vacuum Truck and Truck 10), and be distributed to the following:

- Operations Director
- Utilities Supervisor
- Facilities Supervisor
- Street/Sanitation Supervisor
- Fleet Supervisor

B. Training

Training on the implementation of the OERP shall be provided annually to all employees of the Highland Sanitary District and to any Public Works employee that may become incidentally involved in responding to overflows.

C. Review and Update

The OERP shall be reviewed annually and amended as appropriate.

D. Regulatory Contact Information

Indiana Department of Environmental Management
Office of Water Quality
Water Enforcement Section
Phone: (800) 451-6027 ext. 28670
FAX: (317) 232-8637
Email: wwreports@idem.in.gov
Emergency Spill Response Line: (800) 233-7745

United States Environmental Protection Agency
Water Enforcement and Compliance Assurance Branch (WC-15J)
77 West Jackson Boulevard
Chicago, Illinois 60404-3590
Attn: Keith Middleton
Phone: (312) 886-6465
Email: middleton.keith@epa.gov

Lake County Health Department
Phone: (219) 755-3655

E. Town Staff Contact Information

- Public Works Director/Sanitary District Superintendent

  Mark Knesek
  8118 Grace Street
  Highland, Indiana 46322
  Home Phone: (219) 838-4138
  Cell Phone: (219) 689-6664
  Business Phone: (219) 972-5069
  Email: mknesek@highland.in.gov

- Operations Director

  Tim Gembala
  6410 West 117th Avenue
  Crown Point, Indiana
  Home Phone: (219) 663-7525
  Cell Phone: (219) 781-4464
  Business Phone: (219) 972-5083
  Email: tgembala@highland.in.gov

- Utilities Supervisor

  Aaron Krestel
  9348 Spring Street
  Highland, Indiana
  Home Phone: None
  Cell Phone: (219) 455-7492
  Business Phone: (219) 972-5083
  Email: akrestel@highland.in.gov

- Facilities Supervisor

  Michael Pipta
  3225 Glenwood Avenue
  Highland, Indiana 46322
  Home Phone: (219) 838-2636
  Cell Phone: (219) 545-8219
  Business Phone: (219) 972-5083
  Email: mpipta@highland.in.gov

- Street/Sanitation Supervisor

  Brian Bell
  7492 Wrencote Ct.
  Portage, Indiana 46368
  Home Phone: None
  Cell Phone: (219) 741-7238
  Business Phone: (219) 972-5083
  Email: bbell@highland.in.gov

- Fleet Supervisor

  John Mouratides
  3720 Wicker Avenue
  Highland, Indiana 46322
  Home Phone: (219) 972-0420
  Cell Phone: (219) 730-7841
  Business Phone: (219) 972-5083
  Email: jmouratides@highland.in.gov

- Public Works Dispatch Clerk (Working Hours 7AM to 4PM, Mon.-Fri.)

  Public Works Facility
  8001 Kennedy Ave
  Highland, Indiana 46322
  Business Phone: (219) 972-5083 *(Non-Working Hours Phone Message Directs Callers to Call 911 to Report an Emergency)*

- 911 Dispatcher (Non-Working Hours and Holidays)

  Lake County 911 Call Center
  Phone or Text: 911

- Fire Department Chief

  Chief Bill Timmer
  2901 Highway Ave.
  Highland, Indiana 46322
  Business Phone: (219) 923-9876
  Cell Phone: (219) 746-8053

- Fire Department Operations Chief

  Michael Pipta
  2901 Highway Ave.
  Highland, Indiana 46322
  Business Phone: (219) 923-9876
  Cell Phone: (219) 545-8219

EXHIBIT A

SANITARY SEWER SYSTEM INCIDENT REPORT

☐ **SANITARY SEWER OVERFLOW (SSO)** ☐ **PROPERTY BACKUP**

☐ Preliminary Report ☐ Final Report ☐ Revised Final Report

1. Date and Time Call Received:
   Date:_____/_____/ 20_____ Time:_____:_____AM / PM

2. Caller Information:
   Name:_____
   Phone:_____

3. Specific Location of SSO or Property Backup (Address/Landmark):_____
   _____
   _____

4. Description of Problem Causing SSO or Property Backup:_____
   _____
   _____
   _____

5. Time SSO or Property Backup Noticed by Caller:_____

6. Observations of the Caller (odor, duration, back or front of property):_____
   _____
   _____
   _____

7. Other Relevant Information From Caller (anything that could help Spill Response Crew to quickly locate, assess and stop the SSO or Property Backup):_____
   _____
   _____
   _____

8. Oral Reporting of SSO Within 1 Hour:
   a. SSO Not Involving Fish Kill , but Discharged to Surface Waters
      ☐ Lake County Health Department (219) 755-3655
      Date:_____/_____/_____ Time:_____
   b. SSO Involving Observed Fish Kill
      ☐ Lake County Health Department (219) 755-3655
      Date:_____/_____/_____ Time:_____
      ☐ IDEM Emergency Response Spill Line (888) 233-7745
      Date:_____/_____/_____ Time:_____

9. Best Estimate of Time of SSO or Property Backup Incident:
   a. Start Time:_____ Date_____/_____/_____
   b. End Time:_____ Date_____/_____/_____

10. General Information About SSO or Property Backup at This Location:
   a. Estimated Volume of SSO or Property Backup:_____GAL (See Exhibit E)
   b. Method of Estimated Volume:_____
   c. Were Digital Photos Taken? ☐ Yes ☐ No
   d. Corrective Measures Taken:
      ☐ No Action
      ☐ Removed Blockage
      ☐ Repaired Pump Station
      ☐ Spill Contained
      ☐ Spill Cleaned Up
      ☐ Other:_____
      _____

   e. Cause of SSO or Property Backup (Select all That Apply)
      ☐ Excessive Infiltration/Inflow – Rainfall Event
      ☐ Excessive Infiltration/Inflow – Snowmelt Event
      ☐ High Ground Water
      ☐ Pump/Lift Station Failure
      ☐ Public Sewer System Blockage or Collapse
      ☐ Private Sewer Lateral Blockage or Collapse
      ☐ Other:_____
      _____

   f. Additional Comment:_____
      _____
      _____
      _____
      _____
      _____
      _____

   g. Recommended Follow-up Action:_____
      _____
      _____
      _____
      _____
      _____
      _____
      _____

11. Investigated by:_____

Exhibit B

WARNING!

RAW SEWAGE SPILL

AREA CLOSED

Please Keep Children and Pets Out of Area

Town of Highland, Public Works Office

(219) 972-5083

Exhibit B

KEEP OUT

WARNING!

CONTAMINATED WATER

Lake County Health Department

and

Town of Highland

Exhibit C

Reset Form

BYPASS / OVERFLOW INCIDENT REPORT

State Form 48373 (R8 / 2-19)
Indiana Department of Environmental Management
Office of Water Quality

☐ Follow-up to Bypass report previously sent on: _____

INSTRUCTIONS: *Complete all parts of this form and e-mail signed copies to* ***wwreports@idem.IN.gov****. Submittal of this report will satisfy the Office of Water Quality (OWQ) telephone and written bypass/overflow reporting requirements of your NPDES permit. Please use and the second page of this form as necessary to identify* ***separate locations caused by the same event****. If you have any questions while filling out this form, please call (317) 232-6770.*

To report a spill or if the release is resulting in a fish kill or other severe environmental damage, immediately report the release to the Emergency Response Section spill response line at: (317) 233-7745 or toll free within Indiana at (888) 233-7745.

GENERAL INFORMATION

(1) Facility Name *(Organization)*	(2) Mailing Address *(reporting organization)*	(3) County	(4) NPDES Permit

RELEASE INFORMATION (Location 1)

(5) Outfall Number	(6) Date *(mm/dd/yy)* and Time Release Began	(7) Date *(mm/dd/yy)* and Time Release Stopped	(8) Location of Release *(streets address or Manhole, Lift Station, Force Main etc.)*	(9) Latitude *(Deg Min Sec)*	(9) Longitude *(Deg Min Sec)*
	☐ AM ☐ PM	☐ AM ☐ PM			

(10) Amount of Flow Released *(Always provide a volume.)*	(11) WWTP Flow During Release	(12) WWTP Peak Design Flow Rate
Check one: ☐ Estimated ☐ Actual Gallons	MGD	MGD

(13) Overflow Type *(Select one.)*	(14) Describe any damage to aquatic life or receiving stream:
☐ Sanitary Sewer Overflow ☐ Treatment Bypass *(at wastewater plant)* ☐ Prohibited Combined Sewer Overflow ☐ Dry Weather Combined Sewer Overflow ☐ Combined Sewer System Release	

(15) Reason for Bypass / Overflow *(Select one or more.)*
☐ Construction Related ☐ Power Failure ☐ Equipment Failure ☐ Unknown ☐ Exceeded Max Capacity ☐ Precipitation Inches

(16) System Component(s) *(Select one or more.)*	(17) Additional Description of the Bypass / Overflow Event:	(18) Description of the Area Impacted *(Check all that apply.)*
☐ Manhole ☐ House Lateral ☐ Pipe Failure ☐ Pump Station Failure ☐ Treatment Bypassed ☐ Other ☐ Influent Structure ☐ Air Relief Valve ☐ Sewer Clean Out Describe Other: *(in the box below)*		☐ Affected Private Property ☐ Basement Backup ☐ Occurred at Treatment Plant ☐ Reached Public Land ☐ Reached Receiving Water Name of Receiving Water Impacted:

(19) Additional organizations notified by facility, if necessary *(Select one or more.)*
☐ IDEM Emergency Response ☐ Health Department ☐ DNR Fish and Wildlife ☐ Local Emergency Management ☐ Other:

(20) Actions Taken to Prevent, Minimize, or Mitigate Damage including Clean-up and Treatment of Affected Area
(Select one or more of the following, then add a written description.)
☐ Removed Blockage ☐ Repaired Pipe ☐ Repaired Pump Station ☐ Other ☐ Lime ☐ Clean-Up Debris

(21) Resolution: Actions Taken or Planned to Prevent Recurrence

(22)

CERTIFICATION AND SIGNATURE

I certify under penalty of law that this document and all attachments were prepared under my direction or supervision in accordance with a system designed to assure that qualified personnel properly gather and evaluate the information submitted. Based on my inquiry of the person or persons who manage the system, or those persons directly responsible for gathering the information, the information submitted is, to the best of my knowledge and belief, true, accurate, and complete. I am aware that there are significant penalties for submitting false information, including the possibility of fine and imprisonment for knowing violations. (*The area below is for a handwritten signature or an electronic substitute. Scan the completed form to PDF and e-mail to wwReports@idem.IN.gov)*

SIGNATURE: _____ DATE *(month, day, year)*: _____

Individual Making Report *(printed)*	Telephone Number	Contact E-mail	Date *(month, day, year)* / Time IDEM Notified	☐ AM ☐ PM

Exhibit D

(Resources to Estimate SSO Volume)

TABLE 'A'

ESTIMATED SSO FLOW OUT OF M/H WITH COVER IN PLACE

24" COVER

Height of spout above M/H rim	S S O FLOW Q		Min. Sewer size in which these flows are possible
H in inches	in gpm	in MGD	
1/4	1	0.001	
1/2	3	0.004	
3/4	6	0.008	
1	9	0.013	
1 1/4	12	0.018	
1 1/2	16	0.024	
1 3/4	21	0.030	
2	25	0.037	
2 1/4	31	0.045	
2 1/2	38	0.054	
2 3/4	45	0.065	
3	54	0.077	
3 1/4	64	0.092	
3 1/2	75	0.107	
3 3/4	87	0.125	
4	100	0.145	
4 1/4	115	0.166	
4 1/2	131	0.189	
4 3/4	148	0.214	
5	166	0.240	
5 1/4	185	0.266	
5 1/2	204	0.294	
5 3/4	224	0.322	6"
6	244	0.352	
6 1/4	265	0.382	
6 1/2	286	0.412	
6 3/4	308	0.444	
7	331	0.476	
7 1/4	354	0.509	
7 1/2	377	0.543	
7 3/4	401	0.578	8"
8	426	0.613	
8 1/4	451	0.649	
8 1/2	476	0.686	
8 3/4	502	0.723	
9	529	0.761	

36" COVER

Height of spout above M/H rim	S S O FLOW Q		Min. Sewer size in which these flows are possible
H in inches	in gpm	in MGD	
1/4	1	0.002	
1/2	4	0.006	
3/4	8	0.012	
1	13	0.019	
1 1/4	18	0.026	
1 1/2	24	0.035	
1 3/4	31	0.044	
2	37	0.054	
2 1/4	45	0.065	
2 1/2	55	0.079	
2 3/4	66	0.095	
3	78	0.113	
3 1/4	93	0.134	
3 1/2	109	0.157	
3 3/4	127	0.183	
4	147	0.211	
4 1/4	169	0.243	
4 1/2	192	0.276	
4 3/4	217	0.312	6"
5	243	0.350	
5 1/4	270	0.389	
5 1/2	299	0.430	
5 3/4	327	0.471	
6	357	0.514	
6 1/4	387	0.558	8"
6 1/2	419	0.603	
6 3/4	451	0.649	
7	483	0.696	
7 1/4	517	0.744	
7 1/2	551	0.794	
7 3/4	587	0.845	10"
8	622	0.896	
8 1/4	659	0.949	
8 1/2	697	1.003	
8 3/4	734	1.057	
9	773	1.113	

Disclaimer:
This sanitary sewer overflow table was developed by Ed Euyen, Civil Engineer, P.E. No. 33955, California, for County Sanitation District 1. This table is provided as an example. Other Agencies may want to develop their own estimating tables.

Exhibit D

(Resources to Estimate SSO Volume)

The formula used to develop Table A measures the maximum height of the water coming out of the maintenance hole above the rim. The formula was taken from hydraulics and its application by A.H. Gibson (Constable & Co. Limited).

Example Overflow Estimation:

The maintenance hole cover is unseated and slightly elevated on a 24" casting. The maximum height of the discharge above the rim is 5 ¼ inches. According to Table A, these conditions would yield an SSO of 185 gallons per minute.

FLOW OUT OF M/H WITH COVER IN PLACE

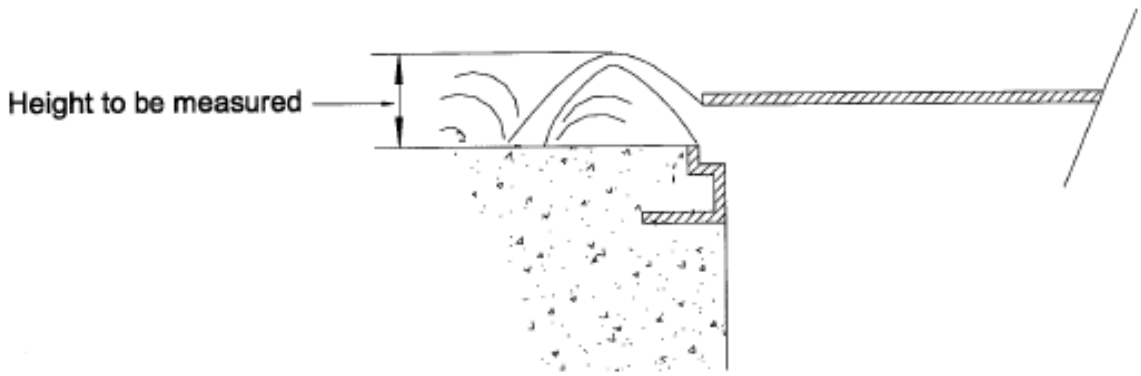

This sanitary sewer overflow drawing was developed by Debbie Myers, Principal Engineering Technician, for Ed Euyen, Civil Engineer, P.E. No. 33955, California, of County Sanitation District 1.

Exhibit D

(Resources to Estimate SSO Volume)

TABLE 'B'

ESTIMATED SSO FLOW OUT OF M/H WITH COVER REMOVED

24" FRAME

Water Height above M/H frame H in inches	S S O FLOW Q in gpm	in MGD	Min. Sewer size in which these flows are possible
1/8	28	0.04	
1/4	62	0.09	
3/8	111	0.16	
1/2	160	0.23	
5/8	215	0.31	6"
3/4	354	0.51	8"
7/8	569	0.82	10"
1	799	1.15	12"
1 1/8	1,035	1.49	
1 1/4	1,340	1.93	15"
1 3/8	1,660	2.39	
1 1/2	1,986	2.86	
1 5/8	2,396	3.45	18"
1 3/4	2,799	4.03	
1 7/8	3,132	4.51	
2	3,444	4.96	21"
2 1/8	3,750	5.4	
2 1/4	3,986	5.74	
2 3/8	4,215	6.07	
2 1/2	4,437	6.39	
2 5/8	4,569	6.58	24"
2 3/4	4,687	6.75	
2 7/8	4,799	6.91	
3	4,910	7.07	

36" FRAME

Water Height above M/H frame H in inches	S S O FLOW Q in gpm	in MGD	Min. Sewer size in which these flows are possible
1/8	49	0.07	
1/4	111	0.16	
3/8	187	0.27	6"
1/2	271	0.39	
5/8	361	0.52	8"
3/4	458	0.66	
7/8	556	0.8	10"
1	660	0.95	12"
1 1/8	1,035	1.49	
1 1/4	1,486	2.14	15"
1 3/8	1,951	2.81	
1 1/2	2,424	3.49	18"
1 5/8	2,903	4.18	
1 3/4	3,382	4.87	
1 7/8	3,917	5.64	21"
2	4,458	6.42	
2 1/8	5,000	7.2	24"
2 1/4	5,556	8	
2 3/8	6,118	8.81	
2 1/2	6,764	9.74	
2 5/8	7,403	10.66	
2 3/4	7,972	11.48	30"
2 7/8	8,521	12.27	
3	9,062	13.05	
3 1/8	9,604	13.83	
3 1/4	10,139	14.6	
3 3/8	10,625	15.3	36"
3 1/2	11,097	15.98	
3 5/8	11,569	16.66	
3 3/4	12,035	17.33	
3 7/8	12,486	17.98	
4	12,861	18.52	
4 1/8	13,076	18.83	
4 1/4	13,285	19.13	
4 3/8	13,486	19.42	

Disclaimer:
This sanitary sewer overflow table was developed by Ed Euyen, Civil Engineer, P.E. No. 33955, California, for County Sanitation District 1. This table is provided as an example. Other Agencies may want to develop their own estimating tables.

Exhibit D

(Resources to Estimate SSO Volume)

The formula used to develop Table B for estimating SSO's out of maintenance holes without covers is based on discharge over curved weir -- bell mouth spillways for 2" to 12" diameter pipes. The formula was taken from hydraulics and its application by A.H. Gibson (Constable & Co. Limited).

Example Overflow Estimation:

The maintenance hole cover is off and the flow coming out of a 36" frame maintenance hole at one inch (1") height will be approximately 660 gallons per minute.

FLOW OUT OF M/H WITH COVER REMOVED (TABLE "B")

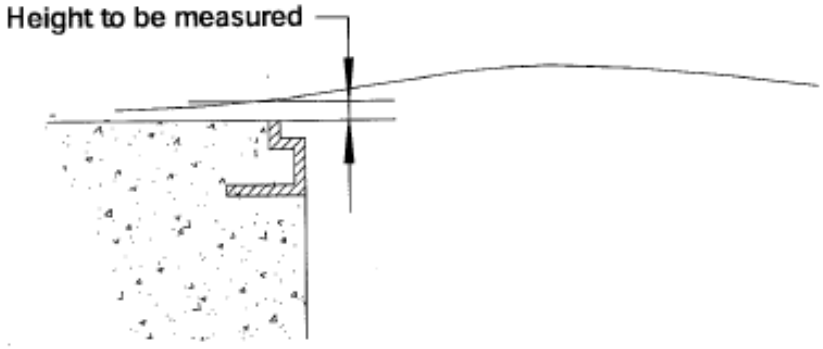

This sanitary sewer overflow drawing was developed by Debbie Myers, Principal Engineering Technician, for Ed Euyen, Civil Engineer, P.E. No. 33955, California, of County Sanitation District 1.

Exhibit D

(Resources to Estimate SSO Volume)

TABLE 'C'

ESTIMATED SSO FLOW OUT OF M/H PICK HOLE

Height of spout above M/H cover H in inches	SSO FLOW Q in gpm	Height of spout above M/H cover H in inches	SSO FLOW Q in gpm	
1/8	1.0	5 1/8	6.2	
1/4	1.4	5 1/4	6.3	
3/8	1.7	5 3/8	6.3	
1/2	1.9	5 1/2	6.4	
5/8	2.2	5 5/8	6.5	
3/4	2.4	5 3/4	6.6	
7/8	2.6	5 7/8	6.6	
1	2.7	6	6.7	
1 1/8	2.9	6 1/8	6.8	
1 1/4	3.1	6 1/4	6.8	
1 3/8	3.2	6 3/8	6.9	Unrestrained
1 1/2	3.4	6 1/2	7.0	M/H cover will
1 5/8	3.5	6 5/8	7.0	start to lift
1 3/4	3.6	6 3/4	7.1	
1 7/8	3.7	6 7/8	7.2	
2	3.9	7	7.2	
2 1/8	4.0	7 1/8	7.3	
2 1/4	4.1	7 1/4	7.4	
2 3/8	4.2	7 3/8	7.4	
2 1/2	4.3	7 1/2	7.5	
2 5/8	4.4	7 5/8	7.6	
2 3/4	4.5	7 3/4	7.6	
2 7/8	4.6	7 7/8	7.7	
3	4.7	8	7.7	
3 1/8	4.8	8 1/8	7.8	
3 1/4	4.9	8 1/4	7.9	
3 3/8	5.0	8 3/8	7.9	
3 1/2	5.1	8 1/2	8.0	
3 5/8	5.2	8 5/8	8.0	
3 3/4	5.3	8 3/4	8.1	
3 7/8	5.4	8 7/8	8.1	
4	5.5	9	8.2	
4 1/8	5.6	9 1/8	8.3	
4 1/4	5.6	9 1/4	8.3	
4 3/8	5.7	9 3/8	8.4	
4 1/2	5.8	9 1/2	8.4	
4 5/8	5.9	9 5/8	8.5	
4 3/4	6.0	9 3/4	8.5	
4 7/8	6.0	9 7/8	8.6	
5	6.1	10	8.7	

Note: This chart is based on a 7/8 inch diameter pick hole

Disclaimer: This sanitary sewer overflow table was developed by Ed Euyen, Civil Engineer, P.E. No. 33955, California, for County Sanitation District 1. This table is provided as an example. Other Agencies may want to develop their own estimating tables.

Exhibit D

(Resources to Estimate SSO Volume)

The formula used to develop Table C is Q=CcVA, where Q is equal to the quantity of the flow in gallons per minute, Cc is equal to the coefficient of contraction (.63), V is equal to the velocity of the overflow, and A is equal to the area of the pick hole.[9] If all units are in feet, the quantity will be calculated in cubic feet per second, which when multiplied by 448.8 will give the answer in gallons per minute. (One cubic foot per second is equal to 448.8 gallons per minute, hence this conversion method).

Example Overflow Estimation:

The maintenance hole cover is in place and the height of water coming out of the pick hole seven-eighths of an inch in diameter (7/8") is 3 inches (3"). This will produce an SSO flow of approximately 4.7 gallons per minute.

FLOW OUT OF VENT OR PICK HOLE (TABLE "C")

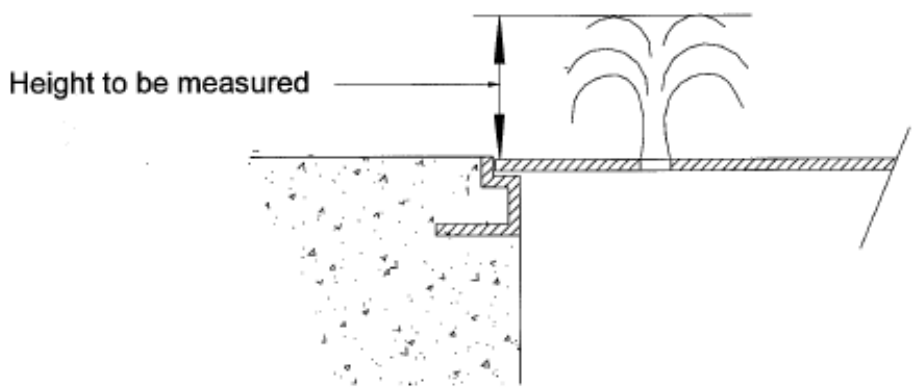

This sanitary sewer overflow drawing was developed by Debbie Myers, Principal Engineering Technician, for Ed Euyen, Civil Engineer, P.E. No. 33955, California, of County Sanitation District 1.

[9] Velocity for the purposes of this formula is calculated by using the formula h = v squared / 2G, where h is equal to the height of the overflow, v is equal to velocity, and G is equal to the acceleration of gravity.

Exhibit D

(Resources to Estimate SSO Volume)

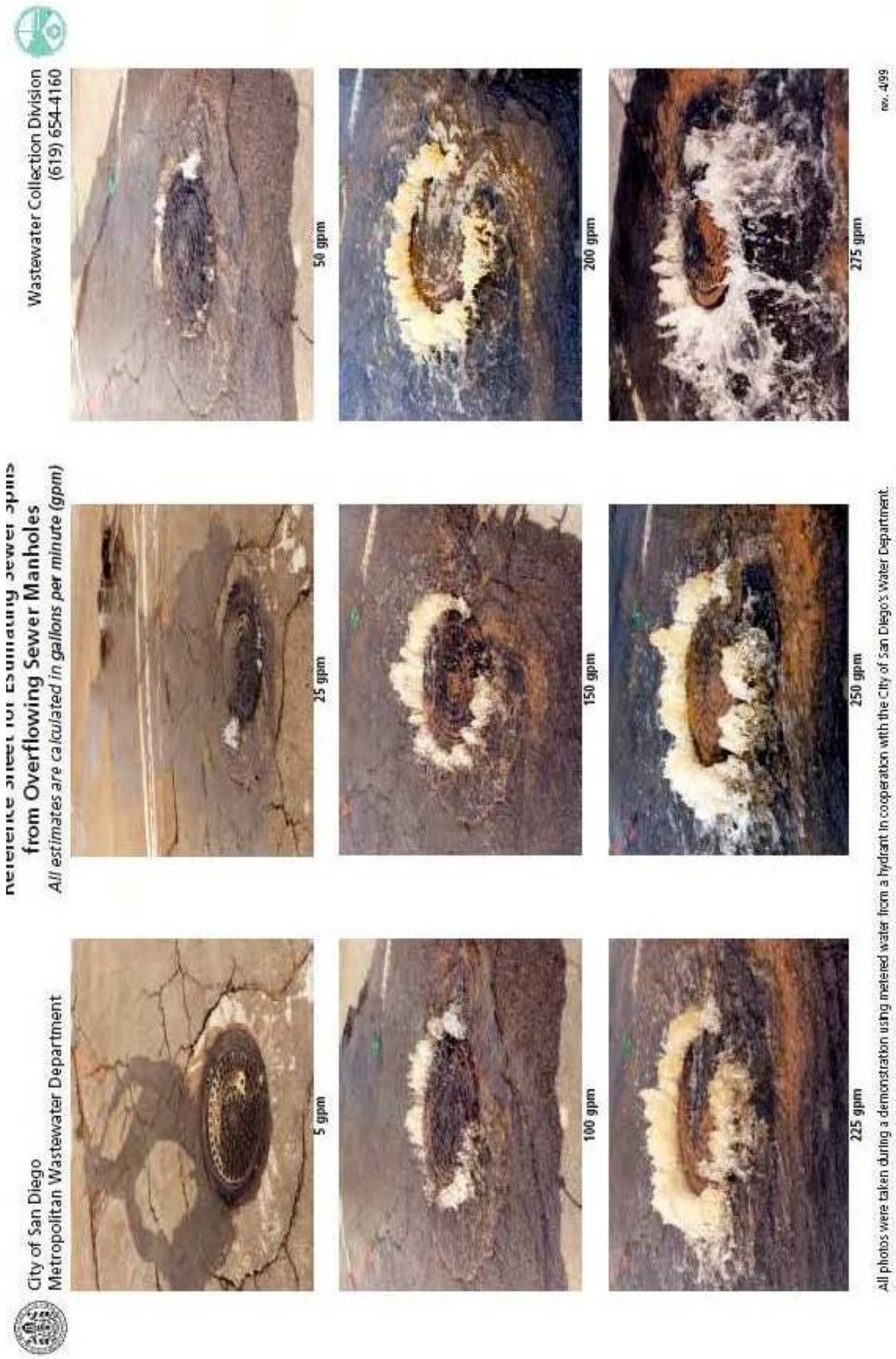

ATTACHMENT G

IDEM BYPASS-OVERFLOW INCIDENT REPORT

March 2019; Revised June 2019; Revised March 2020; Revised February 2021

BYPASS / OVERFLOW INCIDENT REPORT

State Form 48373 (R8 / 2-19)
Indiana Department of Environmental Management
Office of Water Quality

☐ Follow-up to Bypass report previously sent on: _____

INSTRUCTIONS: *Complete all parts of this form and e-mail signed copies to* ***wwreports@idem.IN.gov****. Submittal of this report will satisfy the Office of Water Quality (OWQ) telephone and written bypass/overflow reporting requirements of your NPDES permit. Please use and the second page of this form as necessary to identify* ***separate locations caused by the same event****. If you have any questions while filling out this form, please call (317) 232-6770.*

To report a spill or if the release is resulting in a fish kill or other severe environmental damage, immediately report the release to the Emergency Response Section spill response line at: (317) 233-7745 or toll free within Indiana at (888) 233-7745.

GENERAL INFORMATION

(1) Facility Name *(Organization)*	(2) Mailing Address *(reporting organization)*	(3) County	(4) NPDES Permit

RELEASE INFORMATION (Location 1)

(5) Outfall Number	(6) Date *(mm/dd/yy)* and Time Release Began		(7) Date *(mm/dd/yy)* and Time Release Stopped		(8) Location of Release *(streets address or Manhole, Lift Station, Force Main etc.)*	(9) Latitude *(Deg Min Sec)*	(9) Longitude *(Deg Min Sec)*
		☐ AM ☐ PM		☐ AM ☐ PM			

(10) Amount of Flow Released *(Always provide a volume.)*	(11) WWTP Flow During Release	(12) WWTP Peak Design Flow Rate
Check one: ☐ Estimated ☐ Actual Gallons	MGD	MGD

(13) Overflow Type *(Select one.)*
- ☐ Sanitary Sewer Overflow
- ☐ Treatment Bypass *(at wastewater plant)*
- ☐ Prohibited Combined Sewer Overflow
- ☐ Dry Weather Combined Sewer Overflow
- ☐ Combined Sewer System Release

(14) Describe any damage to aquatic life or receiving stream:

(15) Reason for Bypass / Overflow *(Select one or more.)*
☐ Construction Related ☐ Power Failure ☐ Equipment Failure ☐ Unknown ☐ Exceeded Max Capacity ☐ Precipitation Inches

(16) System Component(s) *(Select one or more.)*
- ☐ Manhole
- ☐ House Lateral
- ☐ Pipe Failure
- ☐ Pump Station Failure
- ☐ Treatment Bypassed
- ☐ Other
- ☐ Influent Structure
- ☐ Air Relief Valve
- ☐ Sewer Clean Out

Describe Other: *(in the box below)*

(17) Additional Description of the Bypass / Overflow Event:

(18) Description of the Area Impacted *(Check all that apply.)*
- ☐ Affected Private Property
- ☐ Basement Backup
- ☐ Occurred at Treatment Plant
- ☐ Reached Public Land
- ☐ Reached Receiving Water

Name of Receiving Water Impacted:

(19) Additional organizations notified by facility, if necessary *(Select one or more.)*
☐ IDEM Emergency Response ☐ Health Department ☐ DNR Fish and Wildlife ☐ Local Emergency Management ☐ Other:

(20) Actions Taken to Prevent, Minimize, or Mitigate Damage including Clean-up and Treatment of Affected Area
(Select one or more of the following, then add a written description.)
☐ Removed Blockage ☐ Repaired Pipe ☐ Repaired Pump Station ☐ Other ☐ Lime ☐ Clean-Up Debris

(21) Resolution: Actions Taken or Planned to Prevent Recurrence

(22)

CERTIFICATION AND SIGNATURE

I certify under penalty of law that this document and all attachments were prepared under my direction or supervision in accordance with a system designed to assure that qualified personnel properly gather and evaluate the information submitted. Based on my inquiry of the person or persons who manage the system, or those persons directly responsible for gathering the information, the information submitted is, to the best of my knowledge and belief, true, accurate, and complete. I am aware that there are significant penalties for submitting false information, including the possibility of fine and imprisonment for knowing violations. (*The area below is for a handwritten signature or an electronic substitute. Scan the completed form to PDF and e-mail to wwReports@idem.IN.gov*)

SIGNATURE: _____ DATE *(month, day, year)*: _____

Individual Making Report *(printed)*	Telephone Number	Contact E-mail	Date *(month, day, year)* / Time IDEM Notified	☐ AM ☐ PM

BYPASS / OVERFLOW REPORT *(Supplemental Locations)*

State Form 48373 (R8 / 2-19)
Indiana Department of Environmental Management
Office of Water Quality

☐ Follow-up to Bypass report previously sent on: _____

(23) *Complete all parts of each table for additional discharge locations caused by the same event as on the first page. For any locations identified in the NPDES permit, include the Outfall number for that location from the permit.*

RELEASE INFORMATION (Location 2)

Outfall Number	Date *(mm/dd/yy)* and Time Release Began	Date *(mm/dd/yy)* and Time Release Stopped	Location of Release *(streets address or Manhole, Lift Station, Force Main etc.)*	Latitude *(Deg Min Sec)*	Longitude *(Deg Min Sec)*
	☐ AM ☐ PM	☐ AM ☐ PM			

Amount of Flow Released	Description of the Area Impacted *(Check all that apply.)*	Name of Receiving Water Impacted
☐ Estimated ☐ Actual Gallons	☐ Affected Private Property ☐ Basement Backup ☐ Reached Public Land ☐ Reached Receiving Water	

RELEASE INFORMATION (Location 3)

Outfall Number	Date *(mm/dd/yy)* and Time Release Began	Date *(mm/dd/yy)* and Time Release Stopped	Location of Release *(streets address or Manhole, Lift Station, Force Main etc.)*	Latitude *(Deg Min Sec)*	Longitude *(Deg Min Sec)*
	☐ AM ☐ PM	☐ AM ☐ PM			

Amount of Flow Released	Description of the Area Impacted *(Check all that apply.)*	Name of Receiving Water Impacted
☐ Estimated ☐ Actual Gallons	☐ Affected Private Property ☐ Basement Backup ☐ Reached Public Land ☐ Reached Receiving Water	

RELEASE INFORMATION (Location 4)

Outfall Number	Date *(mm/dd/yy)* and Time Release Began	Date *(mm/dd/yy)* and Time Release Stopped	Location of Release *(streets address or Manhole, Lift Station, Force Main etc.)*	Latitude *(Deg Min Sec)*	Longitude *(Deg Min Sec)*
	☐ AM ☐ PM	☐ AM ☐ PM			

Amount of Flow Released	Description of the Area Impacted *(Check all that apply.)*	Name of Receiving Water Impacted
☐ Estimated ☐ Actual Gallons	☐ Affected Private Property ☐ Basement Backup ☐ Reached Public Land ☐ Reached Receiving Water	

RELEASE INFORMATION (Location 5)

Outfall Number	Date *(mm/dd/yy)* and Time Release Began	Date *(mm/dd/yy)* and Time Release Stopped	Location of Release *(streets address or Manhole, Lift Station, Force Main etc.)*	Latitude *(Deg Min Sec)*	Longitude *(Deg Min Sec)*
	☐ AM ☐ PM	☐ AM ☐ PM			

Amount of Flow Released	Description of the Area Impacted *(Check all that apply.)*	Name of Receiving Water Impacted
☐ Estimated ☐ Actual Gallons	☐ Affected Private Property ☐ Basement Backup ☐ Reached Public Land ☐ Reached Receiving Water	

RELEASE INFORMATION (Location 6)

Outfall Number	Date *(mm/dd/yy)* and Time Release Began	Date *(mm/dd/yy)* and Time Release Stopped	Location of Release *(streets address or Manhole, Lift Station, Force Main etc.)*	Latitude *(Deg Min Sec)*	Longitude *(Deg Min Sec)*
	☐ AM ☐ PM	☐ AM ☐ PM			

Amount of Flow Released	Description of the Area Impacted *(Check all that apply.)*	Name of Receiving Water Impacted
☐ Estimated ☐ Actual Gallons	☐ Affected Private Property ☐ Basement Backup ☐ Reached Public Land ☐ Reached Receiving Water	

RELEASE INFORMATION (Location 7)

Outfall Number	Date *(mm/dd/yy)* and Time Release Began	Date *(mm/dd/yy)* and Time Release Stopped	Location of Release *(streets address or Manhole, Lift Station, Force Main etc.)*	Latitude *(Deg Min Sec)*	Longitude *(Deg Min Sec)*
	☐ AM ☐ PM	☐ AM ☐ PM			

Amount of Flow Released	Description of the Area Impacted *(Check all that apply.)*	Name of Receiving Water Impacted
☐ Estimated ☐ Actual Gallons	☐ Affected Private Property ☐ Basement Backup ☐ Reached Public Land ☐ Reached Receiving Water	

(ATTACH ADDITIONAL SHEETS IF NECESSARY.)

CERTIFICATION AND SIGNATURE

I certify under penalty of law that this document and all attachments were prepared under my direction or supervision in accordance with a system designed to assure that qualified personnel properly gather and evaluate the information submitted. Based on my inquiry of the person or persons who manage the system, or those persons directly responsible for gathering the information, the information submitted is, to the best of my knowledge and belief, true, accurate, and complete. I am aware that there are significant penalties for submitting false information, including the possibility of fine and imprisonment for knowing violations. (*The area below is for a handwritten signature or an electronic substitute. Scan the completed form to PDF and e-mail to wwReports@idem.IN.gov*)

SIGNATURE: _____ DATE *(month, day, year)*: _____

Bypass/Overflow Incident Report Instructions

Below are numbered instructions for completing the Bypass/Overflow Incident Report State Form 48373. Please fill all fields that you can and as accurately as you can. Bypass/Overflow Reports must be submitted by the facility/system that is responsible for the maintenance and oversight of the collection system where the discharge occurred. Please refer to these instructions while filling out the report:

1. Facility Name (Organization): The facility name as it appears on the NPDES permit. For wastewater systems which do not have an active NPDES permit please enter NONE in the box.

2. Mailing Address: The address where all IDEM communication is sent.

3. County: The County in which the permitted facility is physically located.

4. NPDES Permit: The permit number associated with the facility. For wastewater systems which do not have an active NPDES permit mark this space as either "Terminated" for systems which had an NPDES permit in the past or "N/A" for systems which have never had an NPDES wastewater permit.

5. Outfall Number: The number of the outfall associated with the Bypass/Overflow Incident as identified in the NPDES permit. For discharge locations which have not been specifically listed in the permit, mark as "N/A".

6. Date & Time Release Began: If the exact date and time is not known please indicate the date and time you became **aware** of the release.

7. Date & Time Release Ended: The exact date and time the release ended. If the release is ongoing at the time of the initial report submitted to meet the 24 reporting requirement, please leave this field blank and later resubmit an additional "Follow-up" report with the date and time that the discharge ended and check the "Follow-up to Bypass report previously sent on: ___" box in the upper right corner of the form.

8. Location of Release: The actual physical location of the release: Such as a Street Address; closest cross streets; Manhole ID; Lift Station; Force Main, etc. **NOTE:** Please give the most accurate information in regards to manholes, lift stations and force mains that can be referenced back to documentation at your facility.

9. Latitude and Longitude: Latitude and Longitude shall be reported in decimal degrees (e.g. 77.029289) or degrees, minutes and seconds. The latitude and longitude fields on this report will **soon be required** by EPA; however, these fields can be left blank on the report if the sewer overflows are caused by an extreme wet weather event that inundates a large sewer basin and individual overflow locations (i.e. manholes) are difficult to quantify. At this time, the report will not be sent back if the boxes are blank; however, please attempt to fill in these two fields as accurately as possible.

10. Amount of Flow Released: The flow released should be the best professional judgment from the facility on the estimated number of gallons of sewer overflow for **each** Sewer Overflow Discharge.

11. WWTP Flow During Release: The flow of the treatment plant when the release was observed, often reported in a one hour time increment.

12. WWTP Peak Design Flow Rate: The peak WWTP design flow rate as identified in the respective NPDES permit and/or most recent IDEM OWQ Facilities Construction Permit/Design Summary (commonly listed as peak daily or peak hourly) that included a hydraulic capacity expansion.

13. Overflow Type: Check one and only one box that best applies to the type of incident. **NOTE:** Dry weather CSO is generally interpreted as where there has been less than 0.1 inch of precipitation within the proceeding 72 hours (three (3) days). Prohibited CSO discharges are defined as discharges from CSO outfalls identified in Attachment A of the NPDES permit as being "prohibited". A Combined Sewer Release may include a basement backup in a sewer basin designated as being comprised of combined storm and sanitary sewers.

14. Describe any damage to aquatic life or receiving stream: Describe the conditions of the receiving stream and any aquatic life impaired by the incident.

15. Reason for Bypass/Overflow: Check **all** the boxes that apply to the specific incident.

16. Systems Component(s): Check **all** the boxes of components that are/were involved in the incident.

17. Additional Description of the Bypass/Overflow Incident: Provide additional detailed information regarding why the incident occurred that does not fit in the check boxes and supplemental details about the discharge event.

18. Description of the Area Impacted: Check **all** boxes of area(s) that were/are directly impacted by the discharge. If the discharge reached the receiving waters identify those by name whenever possible.

19. Organizations Notified by Facility: Check **all** of the boxes that apply.

20. Actions Taken to Prevent, Minimize, or Mitigate Damage Including Clean-up and Treatment of Affected Area: Select **all** boxes that apply and then add additional description in box below.

21. Resolution: Actions Taken or Planned to Prevent Recurrence: Describe all actions taken and actions that will be taken to prevent the incident from reoccurring in the future.

22. Certification and Signature: Complete this box in its **entirety**. A qualified person that has properly gathered the information in the report is authorized to sign and submit. NOTE: In circumstances where the certified operator is unavailable, the person on call at the facility may sign and submit.

23. Second Page Instructions: Complete all parts of each table for additional discharge locations caused by the same event as on the first page. For any locations identified in the NPDES permit, include the Outfall number for that location from the permit.

ATTACHMENT H

HIGHLAND MUNICIPAL CODE

March 2019; Revised June 2019; Revised March 2020; Revised February 2021

Title 12

MUNICIPAL UTILITIES AND ENVIRONMENT

Chapters:

12.05 Department of Waterworks
12.10 Department of Public Sanitation and Sanitary District
12.15 Solid Waste Management
12.20 Sewers and Sewage Disposal
12.25 Storm Water Management
12.30 Watercourse Regulation for Pollution and Illicit Discharges

Chapter 12.05

DEPARTMENT OF WATERWORKS

Sections:

12.05.010 Establishment of the department of waterworks.
12.05.020 Advisory members.
12.05.030 Oath – Bond.
12.05.040 Duty of clerk-treasurer to collect water charges.
12.05.050 Authority for loans to sewage utility or civil government – Cash reserve fund.
12.05.060 Board – Powers and duties.
12.05.070 Additional powers and duties.
12.05.080 Rates and charges – Budgeting.
12.05.090 Authority to adopt rules – Rules and regulations on file.
12.05.100 Services rendered to municipality – Payment.
12.05.110 State law adopted.
12.05.120 Schedule of rates and charges.

Statutory reference: Firefighting and fire prevention powers, see IC 36-8-2-3. Municipal home rule, see IC 36-1-3-1 et seq.

12.05.010 Establishment of the department of waterworks.

(A) Creation. There is hereby created for the town a department of waterworks, to be controlled by a board of directors, hereinafter referred to as "the board." The board shall be officially known as the board of waterworks directors of the town of Highland.

(B) Composition – Appointment – Terms. The board of waterworks directors shall consist of five directors to be appointed by the president of the town council as the municipal executive. Not more than three of the directors may be of the same political party. The initial terms of the directors are as follows:

(1) Two directors shall be appointed for terms ending on the first Monday in January 2002;

(2) Two directors shall be appointed for terms ending on the first Monday in January 2003;

(3) One director shall be appointed for a term ending on the first Monday in January 2004.

At the expiration of the respective terms of each of the directors originally appointed, the respective successor directors shall be appointed for a term of three years, commencing on the first Monday of January, and until a successor is appointed and qualified. The appointments are at the pleasure of the appointing authority. The president of the town council, as the municipal executive, may remove a director at any time when, in his judgment, it is for the best interests of the department and the town. The town council president shall have the authority to fill all vacancies which may arise for any reason. The appointment will be for the remainder of the unexpired term of the vacant position. Directors may succeed themselves.

(C) Special Taxing District. The department of waterworks has jurisdiction over a special taxing district (referred to as "the waterworks district" in this chapter) that consists of all the territory within the corporate boundaries of the town, or the territory served by the waterworks, if larger than the corporate boundaries for any reason. [Ord. 1142 § 2, 2000; Ord. 1165 § 2, 2001. Code 2000 § 190.01].

12.05.020 Advisory members.

(A) The board of directors shall further have three advisory directors, which shall consist of the following:

(1) A representative of the fire department, to be nominated by the fire chief and approved by the town council;

(2) The clerk-treasurer or his designee; and

(3) The public works director.

(B) These members shall act in an advisory capacity only and shall have no voting powers. [Ord. 1142 § 2, 2000. Code 2000 § 190.02].

12.05.030 Oath – Bond.
Before entering upon their duties, each director of the board of waterworks shall take and subscribe to the oath of office before a person duly authorized to administer oaths in the state, as required by law, and each of the directors shall give a bond which shall be fixed by the clerk-treasurer of the town, and is subject to his approval. Such bond shall be conditioned upon the faithful and honest discharge of the duties of the directors, and the premiums thereon shall be paid by the town. [Ord. 1142 § 2, 2000. Code 2000 § 190.03].

12.05.040 Duty of clerk-treasurer to collect water charges.
It shall be the duty of the clerk-treasurer of the town to be charged with the collection of such rates and charges and enforce the payment thereof. [Ord. 1142 § 2, 2000. Code 2000 § 190.04].

12.05.050 Authority for loans to sewage utility or civil government – Cash reserve fund.
(A) There is hereby established for the municipal water utility a cash reserve fund as provided in IC 8-1.5-3-11 that shall be carried on the records of the utility by providing for either monthly contributions or transfers to the cash reserve fund of surplus earnings of the utility, as may be identified by the board of waterworks directors.

(B) "Surplus earnings" shall be defined as those cash earnings remaining after provision has been made to take care of current obligations, including expenses of the operating and maintenance fund, the water improvement fund, and the bond and interest fund, whether or not it is a revenue bond or special taxing district bond and any other priority fund requirements that may be fixed by law.

(C) The funds on deposit to the credit of the fund created by this section may be used to make loans to the department of public sanitation as a utility also owned by the town of Highland, for periods not to exceed five years, at any interest rate. The repayment of the loan and interest shall be returned to the cash reserve fund.

(D) The funds on deposit to the credit of the fund created by this section may be used to make loans to the civil government of Highland by the board of waterworks directors, provided the following:

(1) The waterworks utility has on hand a surplus of cash exceeding by at least the amount loaned the sum of all amounts required to pay the indebtedness of the utility falling due during the current calendar year and the following year;

(2) The waterworks utility has on hand the amount necessary to meet current expenses during the year; and

(3) The waterworks utility has on hand the amount necessary to pay for improvements contemplated to be made during the current calendar year minus the estimated receipts during the calendar year.

(4) A loan made to the civil government may not be made for a sum in excess of 50 percent of the amount estimated to be collected from anticipated taxes of the town.

(5) Pursuant to IC 8-1.5-3-12, the loan made to the civil government:

(a) Must be evidenced by an obligation of the municipality;

(b) Must be signed by the executive;

(c) Must be made due on or before 30 days after the last day for the payment of anticipated taxes; and

(d) May bear interest at any rate as determined by the board of waterworks directors, payable at maturity. [Ord. 1364 § 1, 2007. Code 2000 § 190.04.1].

12.05.060 Board – Powers and duties.
(A) The board has the following powers and duties prescribed by IC 8-1.5-3-4:

(1) The board has general supervisory powers over the waterworks, with responsibility for the detailed supervision of the water utility to be vested in its superintendent, who is responsible to the board for the business and technical operation of the utility.

(2) The board shall:

(a) Fix the number and compensation of employees;

(b) Adopt rules governing the appointment of employees, including making proper classifications and rules to:

1. Determine the eligibility of applicants;

2. Determine by competitive examination the relative fitness of applicants for positions;

3. Establish eligible lists arranged according to the ratings secured;

4. Provide for the appointment of those having the highest ratings; and

5. Provide for the promotion of employees;

(c) Subject to IC 36-4-9-2, appoint a superintendent or manager of the water utility under its control, who is responsible to the board for the business and technical operation of the utility; the board shall make the appointment on the basis of fitness to manage the particular utility to which he is to be assigned, taking into account his executive ability and his knowledge of the utility industry;

(d) Subject to IC 36-4-9-12, hire attorneys when required for the operation of the utility;

(e) Hire professional or expert personnel when required for the operation of the utility;

(f) Appropriate, lease, rent, purchase, and hold all real and personal property of the utility;

(g) Enter upon lands for the purpose of surveying or examining the land to determine the location of any plant or appurtenances, provided entry shall occur during reasonable business hours. Entry shall be with the consent of a rightful occupant of the premises, except where a public safety emergency justifies a warrantless entry. If entry is refused, a warrant may be procured to inspect the premises under the terms of IC 36-7-9-15;

(h) Award contracts for:

1. The purchase of capital equipment;

2. The construction of capital improvements; or

3. Other property or purposes that are necessary for the full and efficient construction, management, and operation of the water utility;

(i) Adopt rules for the safe, economical, and efficient management and protection of the water utility;

(j) Deposit at least weekly with the municipal fiscal officer all money collected from the water utility, to be kept in a separate fund, subject to the order of the board if the municipal fiscal officer is not directly charged with the duty of collecting rates and charges; and

(k) Make monthly reports to the fiscal officer of the receipts and disbursements of money belonging to the water utility, and an annual report of the condition of the utility.

(B) The board may purchase by contract electricity, water, gas, power, or any other commodity or service, for the purpose of furnishing the commodity or service to the patrons of the municipally owned utility or to the municipality itself.

(C) If the board wants to purchase the commodity or service from a public utility and the parties cannot agree on a rate or charge to be paid for it, either party may apply to the commission or other appropriate state or federal regulatory agency to establish a fair and reasonable rate or charge to be paid for the commodity or service.

(D) The board may discontinue water service by a waterworks to:

(1) A water consumer; or

(2) Any property;

upon failure by the water consumer or the property owner to pay charges legally due for sewer or sewage disposal plant service. However, the water service may not be discontinued for nonpayment of sewer or sewage disposal plant service charges until the charges have been due and unpaid for at least 30 days.

(E) Before water service is discontinued under subsection (D) of this section, the board must give written notice to the water consumer or property owner of its intention to discontinue water service if the unpaid sewer or sewage disposal plant service charges are not paid before a date specified in the notice. The notice must be mailed not less than 10 days before water service is to be discontinued and addressed to the water consumer or the property owner at his last known address. [Ord. 1142 § 2, 2000; amended during 2012 recodification. Code 2000 § 190.05].

12.05.070 Additional powers and duties.
(A) In addition, the board may:

(1) Hold hearings following public notice;

(2) Make findings and determinations;

(3) Design, order, contract for, or construct pumping plants or stations, filtration plants, reservoirs, water mains, hydrants, and other equipment, structures, and appurtenances, and rebuild, equip, improve, extend, and repair plants, equipment, and structures;

(4) Build or have built all roads, levees, walls, or other structures that may be necessary or desirable in connection with waterworks;

(5) Make all necessary or desirable improvements of the grounds and premises under its control;

(6) Issue and sell bonds for the construction, alteration, addition, or extension to the waterworks, in the manner prescribed by law, including the provisions of IC 8-1.5-2;

(B) The board shall furnish an adequate supply of water to consumers within the waterworks district. [Ord. 1142 § 2, 2000. Code 2000 § 190.06].

12.05.080 Rates and charges – Budgeting.
(A) Pursuant to IC 8-1.5-4-1.5(c), the board of directors of the department of waterworks shall operate as the board for the purposes of IC 8-1.5-3-4 and 8-1.5-3-8.

(B) The board shall submit a budget of its financial needs for the next year in the detail it requires.

(C) The board shall recommend to the town council reasonable and just rates and charges for services to the patrons of the water utility.

(D) The rates and charges made by a municipality for a service rendered or to be rendered, either directly or in connection therewith, must be nondiscriminatory, reasonable, and just.

(E) “Reasonable and just rates and charges for services” means rates and charges that produce sufficient revenue to:

(1) Pay all the legal and other necessary expenses incident to the operation of the utility, including:

(a) Maintenance costs;

(b) Operating charges;

(c) Upkeep;

(d) Repairs;

(e) Depreciation; and

(f) Interest charges on bonds or other obligations, including leases.

(2) Provide a sinking fund for the liquidation of bonds or other obligations, including leases;

(3) Provide a debt service reserve for bonds or other obligations, including leases, in an amount established by the municipality, not to exceed the maximum annual debt service on the bonds or obligations or the maximum annual lease rentals;

(4) Provide adequate money for working capital;

(5) Provide adequate money for making extensions and replacements to the extent not provided for through depreciation in subsection (E)(1) of this section; and

(6) Provide money for the payment of any taxes that may be assessed against the utility.

(F) All approved rates and charges must produce an income sufficient to maintain the utility property in a sound physical and financial condition to render adequate and efficient service. Rates and charges too low to meet these requirements are unlawful.

(G) The board may recommend for the consideration of the legislative body rates and charges sufficient to include a reasonable return on the utility plant of the municipality, subject to the provisions of this chapter.

(H) Rates and charges established under this chapter are subject to the approval of:

(1) The board of waterworks directors by proper enactment; and

(2) The town council in accordance with the procedures set forth in IC 8-5-3-8.1 and subsection (I) of this section.

(I) Rates and charges shall be recommended by the board of waterworks directors, after it conducts a proper rate study. The board shall transmit its recommendation to the town council for rates and charges in the form of a proposed ordinance. Before the rates and charges may go into effect, the following procedures must take place:

(1) After the introduction of the ordinance establishing the rates and charges under this chapter, but before the ordinance is finally adopted, the municipal legislative body shall hold a public hearing at which users of the waterworks, owners of property served or to be served by the waterworks, and other interested persons may be heard concerning the proposed rates and charges.

(2) Notice of the hearing, setting forth the proposed schedule of rates and charges, shall be:

(a) Published in accordance with IC 5-3-1 (IC 5-3-1-1 through 5-3-1-9);

(b) Mailed to owners of vacant or unimproved property if the ordinance includes a fee for water service to vacant or unimproved property; and

(c) Mailed to users of the waterworks located outside the municipality's corporate boundaries.

(3) The notice may be mailed in any form so long as the notice of hearing is conspicuous. The hearing may be adjourned from time to time.

(4) After the hearing, the municipal legislative body shall adopt the ordinance establishing the rates and charges, either as originally introduced or as modified. A copy of the schedule of rates and charges adopted shall be kept on file and available for public inspection in the offices of the board and the municipal clerk.

(J) The rates and charges established for any class of users or property shall be extended to cover any additional property that is subsequently served and falls within the same class, without any hearing or notice.

(K) The municipal legislative body may change or readjust the rates and charges in the same manner as they were established.

(L) Rates and charges collected under this chapter are considered revenues of the waterworks. [Ord. 1386 § 3, 2008; Ord. 1426 § 2, 2009. Code 2000 § 190.07].

12.05.090 Authority to adopt rules – Rules and regulations on file.
(A) Pursuant to its authority and subject to law, the board shall adopt rules for the safe, economical, and efficient management and protection of the water utility.

(B) A copy of all rates, rules and regulations under which water service will be rendered shall be filed for the convenience of the public in the general office of the utility and the office of the clerk-treasurer.

(C) Special Lawn Sprinkling Conservation Authority. In addition to the authority to adopt such other rules and regulations that the board may adopt from time to time, the board of waterworks shall have the authority to establish rules and regulations regulating the days, time periods and hours for lawn sprinkling within the town.

(D) Any person, firm or corporation who violates or fails to comply with the rules and regulations of the board of waterworks concerning the restrictions and regulations of lawn sprinkling shall be punished by a fine not to exceed $100.00. Every day any violation of this section continues shall constitute a separate offense.

(E) Any person, firm or corporation who violates or fails to comply with any other of the rules and regulations of the board of waterworks may be punished by a fine not to exceed $2,500. Every day any violation of this section continues shall constitute a separate offense.

(F) The board shall have the authority to enforce its rules and regulations according to rules it may promulgate, including bringing suit in the name of the municipality for all legal or equitable relief, provided:

(1) That a majority vote of the entire membership of the board shall be sufficient to pass and adopt any rule, regulation, order or resolution, unless a greater vote is required by statute, ordinance or rule;

(2) That a two-thirds vote of the entire membership of the board, after unanimous consent of the members present to consider the rule, is required to pass and adopt a rule of the board of waterworks on the same day or at the same meeting at which it is introduced. [Ord. 1142 § 2, 2000; Ord. 1426 § 3, 2009. Code 2000 § 190.08].

12.05.100 Services rendered to municipality – Payment.
(A) The cost and value of maintaining hydrants and other facilities for fire protection shall be excluded from the charges against the municipality and shall be recovered from the other customers of the waterworks beginning no sooner than January 1, 2005;

(B) The change in the recovery of current revenue authorized by this section shall be reflected in a schedule of new rates to be filed with the commission at least 30 days before the time the schedule of new rates is to take effect;

(C) The new schedule of rates shall:

(1) Eliminate fire protection charges billed directly to the governmental unit, other than charges for the construction cost for new hydrants installed on and after the date specified in the ordinance; and

(2) Increase the rates charged each customer of the utility, based on equivalent meter size, by an amount equal to:

(a) The revenues lost from the elimination of such fire protection charges; divided by

(b) The current number of equivalent five-eighths-inch meters. [Ord. 1249 § 1, 2004. Code 2000 § 190.09].

12.05.110 State law adopted.
In addition to the foregoing, the provisions of IC 8-1.5-4 et seq., as amended, concerning the creation and operation of a department of waterworks, is hereby adopted by the town council and incorporated herein by reference, and made a part of this code, with two copies on file in the office of the clerk-treasurer and available for public inspection, pursuant to IC 36-1-5-4, so as to make such statutes and all amendments thereto effective and operative as to the town. [Amended during 2012 recodification; Ord. 1142 § 2, 2000. Code 2000 § 190.10].

12.05.120 Schedule of rates and charges.
(A) Preamble. This schedule of rates and charges operates in concert with and complementary to the waterworks rules and regulations as adopted by the board of waterworks directors. Any conflict between rates and charges set forth in the waterworks rules and regulations and this chapter shall be resolved in favor of the rates and charges set forth in this section.

(B) Schedule of Recurrent Usage Ratio and Charges. For the use of and the service rendered by the water utility of the town of Highland, Indiana, the following rates and charges are established based upon the amount of water supplied by said water utility. Recurrent charges will include a fixed charge, a consumption charge and a fee for hydrant maintenance.

Monthly Charges	
(1) Consumption Per Month	$1.61 per 1,000 gallons consumed

(a) Supplier Cost Tracker. The consumption charge includes the cost of supply (purchased water). As this cost is adjusted to the water utility, upon notice of one billing cycle, the rate may be adjusted to reflect the change in cost of supply, without additional procedures.

(2) Minimum Monthly Charges. Each user shall pay a minimum charge in accordance with the following applicable size of meter installed:

Size of Meter	Monthly Fixed Fee
5/8"	$11.50
1"	26.14
1 1/4"	38.83
1 1/2"	50.54
2"	79.82
3"	148.14
4"	245.74
6"	489.74
8"	782.54

(3) Fire Protection Service Surcharge. In addition to the charges set forth in subsections (A)(1) and (2) of this section, the following surcharges for fire protection or hydrant maintenance are to be recovered from the customers of the waterworks as a monthly fee to be charged with the other charges on the utility bill, pursuant to IC 8-1.5-4-14(b):

Public Fire Protection

Size of Meter	Monthly Rates
5/8"	$2.64
1"	6.60
1 1/4"	10.03
1 1/2"	13.20
2"	21.12
3"	39.60
4"	66.00
6"	132.00
8"	211.20

Private Fire Protection

Size of Meter	Annual Charge
2" or less connection	$53.69
4" connection	215.22
6" connection	485.04
8" connection	647.32
10" connection	970.14
12" connection	1,615.68

(4) Temporary Users. Temporary users of hydrants shall be charged for the water used based on the rates set forth in the schedule of rates and charges most currently in effect and prevailing.

(C) Delinquent Payment Penalty. All bills for water service not paid on the due date thereof, as stated in such bills, shall be subject to a collection or delinquent payment charge the greater of $10.00 or 10 percent of any balance due and owing. Also see late payment charge in Waterworks Rule 2.3. (See Waterworks Rule 2.2.1)

(D) Schedule of Nonrecurring Fees and Charges. The following additional fees and charges are set forth as follows:

(1) Service Deposit:

Residential	$60.00
Small Business	$75.00
Large business (car wash, laundromat, restaurant)	$200.00

(See Waterworks Rule 1.8)

(2) Construction Water Use:

Without meter: see building inspector for charges

(See Waterworks Rule 1.10)

(3) Service Charge for Meters:

5/8"	Meter cost plus $50.00
1"	Meter cost plus $50.00
1 1/2"	Meter cost plus $50.00
For larger meters	Meter cost plus $50.00

(4) Tapping/Inspection Charge:

Residential	$200.00
Commercial/Industrial	$330.00

(5) Meter Testing (Residential): $35.00

Meter testing all others	Actual cost plus $15.00

(See Waterworks Rule 1.16.1(I))

(6) Read-O-Matics:

(7) Frozen or Carelessness/Repair of Meter:

Fee scheduled by water department (See Waterworks Rule 1.16.1(H))

(8) Late or Delayed Payment Charge:

$10.00 per month plus one percent per month on unpaid balance

(9) Service Restoration Charges: $30.00

(See Waterworks Rule 1.17.3)

Urgent service restoration surcharge: $50.00

	In addition to the fee above, a surcharge in the identified amount will be charged to restore water services Monday through Thursday after 3:00 p.m.	
(10)	Returned or NSF Checks:	Actual bank charge plus $15.00 administrative fee
	(See Waterworks Rule 1.17.3(K))	
(11)	Maintenance of Service Pipes and Meter Boxes:	
	Water wastage service fee after grace period	$20.00 per day
	(See Waterworks Rule 1.14)	
(12)	Manual Meter Reading Surcharge Fee:	$28.33 per month
	(See Waterworks Rule 1.17.3)	

(E) Annual Review Required. The board of waterworks directors shall review the rates and charges set forth in Rules 2.1 through 2.3 to determine their sufficiency. The board of waterworks directors may recommend a change in rates and charges if upon review it is determined that all rate components experience an aggregate (net) cost increase of more than five percent. This excludes costs of purchased supply managed by a tracker. [Ord. 1520 § 2, 2012; Ord. 1586 §§ 2, 3, 2015; Ord. 1654 §§ 2, 3, 2017. Code 2000 § 190.11].

Chapter 12.10

DEPARTMENT OF PUBLIC SANITATION AND SANITARY DISTRICT

Sections:

12.10.010 Department established.
12.10.020 Terms of office – Vacancies – Removal.
12.10.030 Officers and quorum.
12.10.040 Jurisdiction and powers of the board.
12.10.050 Fees – Establishment – Modification – Collection.
12.10.060 Fees – Notice of delinquency.
12.10.070 Certain overdue user fees.
12.10.080 Basis of fees fixed by the board.
12.10.090 Regulatory authority over chemicals and waste strength detrimental to sewage works.
12.10.100 Disposition of all funds of the department of public sanitation and sanitary district.
12.10.105 Special sanitary district operating maintenance and general expense fund.
12.10.110 Sanitary district sewage cash reserve fund.
12.10.120 Loans from the sanitary district to the civil government.
12.10.130 Loans from the sanitary district to the municipal water utility.

12.10.010 Department established.

(A) The department of public sanitation is established as an executive department in and for the town of Highland, as authorized in IC 36-9-25-1(a), and the provisions of IC 36-9-25 et seq., as amended from time to time, are hereby adopted and made effective upon the town of Highland and the operation of the department.

(B) As used in this chapter, “board” refers to a board of sanitary commissioners, “department” refers to a department of public sanitation, and “district” means the area within the jurisdiction of the Highland department of public sanitation.

(C) All the territory included within the corporate boundaries of the municipality constitutes a special taxing district for the purpose of providing for the sanitary disposal of the sewage of the district in a manner that protects the public health and prevents the undue pollution of watercourses of the district.

(D) The department is under the control of a board of sanitary commissioners, which consists of five commissioners. All of the commissioners shall be appointed by the town council president as municipal executive. The terms shall be staggered, with no more than two commissioners subject to appointment or reappointment in any year. Not more than three may be of the same political party. There shall be a commissioner position with a term commencing on January 1, 2013, a commissioner position with a term commencing on January 1, 2014, a commissioner position term commencing on January 1, 2015, and two commissioner positions terms commencing on January 1, 2017. The terms shall continue for four years and until a successor is appointed and qualified, subject to provisions set forth in HMC 12.10.020 and IC 36-1-8-10(c).

(E) Before beginning the commissioner’s duties, each commissioner shall take and subscribe the usual oath of office. The oath shall be endorsed upon the certificate of appointment and filed with the municipal clerk.

(F) Each commissioner shall also execute a bond in the penal sum of $5,000 payable to the state and conditioned upon the faithful performance of the commissioner’s duties and the faithful accounting for all money and property that comes under the commissioner’s control. The bond must be approved by the municipal executive.

(G) The appointed commissioners are entitled to a salary of not less than $3,600 a year during actual construction and not less than $600.00 a year in other years.

(H) Notwithstanding IC 36-1-8-10, in determining the political party of a member consistent with the limitation of the number of members being from the same political party set forth in subsection (D) of this section at the time of appointment the appointee must:

(1) Have voted in the two most recent primary elections held by the party with which the appointee claims affiliation; or

(2) If the appointee did not vote in the two most recent primary elections or only voted in one of those elections, be certified as a member of the party with which the appointee claims affiliation by that party's county chairman for the county in which the appointee resides. [Ord. 1548 § 2, 2013].

12.10.020 Terms of office – Vacancies – Removal.
(A) Commissioners serve for a term of four years. If a vacancy occurs on the board, the town council president as municipal executive shall appoint a commissioner for the remainder of the term within 30 days after the vacancy occurs.

(B) A commissioner may not be removed from office except upon charges preferred before the town council president as municipal executive and a hearing held on them. The only permissible reasons for removal are neglect of duty and incompetence. The commissioner must be given at least 10 days' notice of the time and place of the hearing and the opportunity to produce evidence and examine and cross-examine witnesses. All testimony shall be given under oath. The town council president as municipal executive shall put his findings in writing and file them with the clerk-treasurer.

(C) If the charges are sustained and the commissioner removed, he or she may appeal the findings within 10 days after the date they are filed with the clerk to the circuit or superior court of the county in which the municipality is located. The commissioner shall file an original complaint against the executive, stating the charges preferred and the findings made. The court shall hear the appeal within 30 days after it is filed without a jury and shall either ratify or reverse the finding of the executive. The judgment of the court is final and an appeal may not be taken. [Ord. 1548 § 2, 2013].

12.10.030 Officers and quorum.
(A) The board shall choose one of its members to be president and another to be vice president, who shall perform the usual duties of those offices. The officers serve for a period of one year or until their successors are elected and qualified.

(B) The municipal fiscal officer shall perform the same duties with the funds and accounts of the board as with the funds and accounts of the other executive departments of the municipality, except as otherwise provided in IC 36-9-25. The fiscal officer receives no additional compensation for performing these duties. However, a share of the compensation fixed for the fiscal officer by the legislative body may be paid from funds of the department.

(C) A majority of the members of the board constitutes a quorum, and the concurrence of a majority is necessary for any action of the board. The board shall hold regular meetings at the times it fixes and may call special meetings at the times and upon the notice that it fixes by rule or resolution. All meetings must be open to the public.

(D) The board may adopt the rules that it considers necessary to conduct its meetings and business and to control and manage the property under its jurisdiction. [Ord. 1548 § 2, 2013].

12.10.040 Jurisdiction and powers of the board.
(A) The board shall manage and control all sewage works of the district. The board has concurrent power with the works board of the municipality to construct, reconstruct, maintain, repair, and regulate the use of all connecting and intercepting sewers. The board shall collect and remove garbage, ashes, and other waste materials to prevent the pollution of watercourses within the district and to protect the public health. The board may purchase, acquire, construct, reconstruct, operate, repair, and maintain all sewage works. In so doing, it shall operate according to the provisions of IC 36-9-25 as amended from time to time.

(B) In performing its duties the board may do the following:

(1) If needed for sewage works, condemn, appropriate, lease, rent, purchase, and hold any real or personal property within the district or within five miles outside the boundaries of the district.

(2) Enter upon any lots or lands for the purpose of surveying or examining them to determine the location of any sewage works or other structures, roads, levees, or walls connected with or necessary for the use or operation of the facilities.

(3) Design, order, contract for, construct, reconstruct, and maintain the sewage works.

(4) Build or have built all roads, levees, walls, other structures, or lagoons that may be desirable in connection with sewage works and make improvements to the grounds and premises under its control, including the erection and operation of a plant for the removal of sand and gravel from the grounds.

(5) Compel the owners, operators, or lessees of all factories, shops, works, plants, or other structures to treat, purify, or eliminate from the sewage and trade waste of the premises any ingredients that interfere with the successful operation of the sewage works. It may compel the owners, operators, or lessees of the premises located on a watercourse to direct an excessive flow of water into the watercourse.

(6) Review and approve plans for privately constructed plants for the treatment or elimination of trade waste. This is to insure that an owner, operator, or lessee of a house, factory, shop, works, plant, or other structure that may be directly or indirectly connected with sewers emptying into the sewage works does not construct a purification plant, machine, or other device for eliminating or treating the trade waste from those places for the purpose of eliminating ingredients that would harm the sewage works until the plans have been submitted to and approved by the board. After plans have been submitted to the board, it may reject them in their entirety or order changes to be made that include its supervision and regulation of the operation. An appeal may be taken from the decision of the board rejecting the plans submitted or ordering changes by the owner, operator, or lessee of a proposed private plant, in the same manner as appeals from the works board as far as applicable.

(7) Build or have built a plant or plants and all appurtenances for the treatment of sludge, pressing of sludge, or converting sludge into marketable fertilizer.

(8) Sell any byproduct from the sewage works, or furnish any byproduct free for the use of the municipality or for other public uses, with revenue derived from the sale above the amount needed for maintenance to be paid into the sanitary district bond fund, or if no bonds are outstanding, to revert to its (special sanitary district operating fund) general fund.

(9) Compel the owners, lessees, or agents in possession of lots or land from which sewers discharge sewage or drainage and pollute a watercourse or body of water or constitute a menace to public health and welfare to connect the sewers with drains leading directly or indirectly into sewage works regulating the use and assessing reasonable charges.

(10) Construct or have constructed regulating devices at the junction of combined sewers with intercepting sewers to regulate the discharge into the intercepting and connecting sewers to prevent the pollution of streams or bodies of water or a menace to the public health and welfare.

(11) Construct, add to, reconstruct, or maintain an incinerating or reduction plant or other plants for the conversion, destruction, or disposal of garbage, filth, ashes, dirt, and rubbish. The board may operate the plant in connection with sewage works, and sell any byproducts derived from the garbage, filth, ashes, or rubbish, including sand and gravel taken from lands under the control of the board at prices that are determined by the board, or furnish it free to the municipality or for other public uses, with revenue derived above the amount needed for maintenance to be paid into the sanitary district bond fund, or if no bonds are outstanding, to revert to its general fund.

(12) Take charge of all real property, belonging to the municipality and under the control of the works board, suitably located for sewage works if the board demands the works board, subject to contracts, to relinquish and transfer control of real and personal property used by the works board for the collection and removal of garbage and ashes. The transfer of personal property must be made by resolution adopted by the works board describing the property, with a copy of the resolution to be delivered to the board and made a matter of record in the minutes of the proceedings of the board.

(13) Collect and remove, or contract for the collection and removal of, all garbage, ashes, dead animals, refuse, and wastes from domestic premises, and construct or have constructed stations, including barns, garages, sheds, blacksmith shops, dumps, incinerators, and all other useful or necessary improvements for this purpose. This includes the power to collect and remove soil and other sewage in areas not provided with sewers, and then to discharge or dispose of it into sewage works.

(14) Enter into contracts in the name of the municipality, with the approval of the executive as provided by law.

(15) Employ and pay for all engineering, architectural, legal, and other professional services needed in carrying out this chapter, including determining the number, prescribing the duties, and fixing the compensation for all its engineers, chemists, attorneys, bacteriologists, surveyors, inspectors, clerks, stenographers, laborers, supervisors, and other employees as provided by law for other executive departments of the municipality.

(16) Adopt resolutions, rules, and bylaws that are necessary to carry out this chapter, including repealing or amending them consistent with this chapter.

(17) Prepare a schedule of reasonable service fees and collect them from persons who own, lease, or possess or control as tenants or as agents lots or lands located outside the boundaries of the district if the lots or lands are benefited by connection into the sanitary sewer system of the district, with the proceeds from sewage connections and treatment service credited to the general fund of the district for general use and maintenance purposes. The fees may be fixed, repealed, or amended, or the service discontinued, by the board at its discretion.

(18) Sue or be sued in the name of the municipality, with payment for obligations and of a judgment against the municipality in an action to be made solely from funds of the department and its district that may be available for this purpose.

(19) Pay for services rendered or for any other obligations incurred by the board while executing its powers, or pay any judgments, including interest and costs, by issuing and selling the bonds of the district, or obtaining temporary loans or levying taxes as authorized by this or other statutes for any other purpose.

(20) Lease, rent, purchase, and hold real or personal property more than five miles outside the boundaries of the district if the property is needed to store sludge or to convert sludge into marketable fertilizer or to conduct activities that are related to those activities.

(21) Levy a special ad valorem tax for general expenses and operating purposes, pursuant to IC 36-9-25, sections 19 and 32.

(22) Issue special taxing district bonds in the name of the municipality, which shall constitute an indebtedness of the sanitary district as a special taxing district, payable out of a special tax levied upon the property of the district, as provided by IC 36-9-25, sections 27 and 29.

(23) Provide financial assistance to property owners to construct or install regulating devices, improvements or overhead plumbing or backflow prevention devices, all subject to the provisions of IC 36-9-25-42. [Ord. 1548 § 2, 2013].

12.10.050 Fees – Establishment – Modification – Collection.

(A) In connection with its duties, the board may fix fees for the treatment and disposal of sewage and other waste discharged into the sewerage system, collect the fees, and establish and enforce rules governing the furnishing of and payment for sewage treatment and disposal service. The fees must be just and equitable and shall be paid by any user of the sewage works and the owner of every lot, parcel of real property, or building that is connected with and uses the sewage works of the district by or through any part of the sewerage system. This section applies to owners of property that is partially or wholly exempt from taxation, as well as owners of property subject to full taxation.

(B) The board may change fees from time to time. The fees, together with the taxes levied under this chapter, must at all times be sufficient to produce revenues sufficient to pay operation, maintenance, and administrative expenses,

to pay the principal and interest on bonds as they become due and payable, and to provide money for the revolving fund authorized by this chapter.

(C) Fees may not be established until a public hearing has been held at which all the users of the sewage works and owners of property served or to be served by the works, including interested parties, have had an opportunity to be heard concerning the proposed fees. After introduction of the resolution fixing fees, and before they are finally adopted, notice of the hearing setting forth the proposed schedule of fees shall be given by publication in accordance with IC 5-3-1. After the hearing the resolution establishing fees, either as originally introduced or as amended, shall be passed and put into effect. However, fees related to property that is subject to full taxation do not take effect until they have been approved by ordinance of the municipal legislative body.

(D) A copy of the schedule of the fees shall be kept on file in the office of the board and must be open to inspection by all interested parties. The fees established for any class of users or property served shall be extended to cover any additional premises thereafter served that fall within the same class, without the necessity of hearing or notice.

(E) A change of fees may be made in the same manner as fees were originally established. However, if a change is made substantially pro rata for all classes of service, hearing or notice is not required, but approval of the change by ordinance of the municipal legislative body is required.

(F) If a fee established is not paid within 30 days after it is due, the amount, together with a penalty of 10 percent and a reasonable attorney's fee, may be recovered by the board from the delinquent user or owner of the property served in a civil action in the name of the municipality.

(G) Fees assessed against real property under this section also constitute a lien against the property assessed. The lien attaches at the time of the filing of the notice of lien in the county recorder's office. The lien is superior to all other liens except tax liens, and shall be enforced and foreclosed in the same manner as is provided for liens under IC 36-9-23-33 and 36-9-23-34.

(H) A fee assessed against real property under this section constitutes a lien against the property assessed only when the fee is delinquent for no more than three years from the day after the fee is due.

(I) In addition to the penalties under subsections (F) and (G) of this section and HMC 12.10.070, a delinquent user may not discharge water into the public sewers and may have the property disconnected from the public sewers.

(J) The authority to establish a user fee under this section includes fees to recover the cost of construction of sewage works from industrial users as defined and required under federal statute or rule. Any industrial users' cost recovery fees may become a lien upon the real property and shall be collected in the manner provided by law. In addition, the imposition of the fees, the use of the amounts collected, and the criteria for the fees must be consistent with the regulations of the federal Environmental Protection Agency. It also includes fees to recover costs associated with storm water and solid waste management. [Ord. 1548 § 2, 2013].

12.10.060 Fees – Notice of delinquency.
If a fee established under HMC 12.10.050, governing fees fixed under Chapters 12.15, 12.20 and 12.25 HMC, is not paid within 30 days after it is due, a copy of any notice of delinquency sent to a delinquent user who is a tenant must be sent to the owner of the property occupied by the tenant at the latest address of the owner as shown on the property tax records of the county in which the property is located. [Ord. 1548 § 2, 2013].

12.10.070 Certain overdue user fees.[1]
If, after sending the notices set forth under this chapter, an account has a balance overdue for 90 or more days and the balance of fees with penalties does not exceed $25.00, then the overdue fees and penalties may be expensed as bad debt by the billing authority, without prior notification to the board of sanitary commissioners, and the procedures set forth in HMC 12.10.050(G) and IC 36-9-23-33 and 36-9-23-34 need not be undertaken, pursuant to IC 36-9-25-11.7. [Ord. 1548 § 2, 2013].

12.10.080 Basis of fees fixed by the board.[2]
(A) The fees for the treatment and disposal of sewage may be based on:

(1) A flat charge for each sewer connection;

(2) The amount of water used on the premises;

(3) The number and size of water outlets on the premises;

(4) The amount, strength, or character of sewage discharged into the sewers;

(5) The size of sewer connections; or

(6) Any combination of these factors or other factors that the board determines necessary in order to establish just and equitable rates and charges.

(B) The municipal water utility will cooperate with the board of sanitary commissioners by providing water consumption data when necessary in the computation of the sewage services invoices and include invoicing data for users or property receiving sewage services in invoices of the water utility billed to each user or property served.

(C) If a person owns or occupies real property that is connected to the sewage works and either directly or indirectly uses water obtained from a source other than the municipal water utility that is not measured by a water meter acceptable to the board, then the board may require the person, at his own expense, to furnish, install, and maintain a water or sewage measuring device acceptable to the board. [Ord. 1548 § 2, 2013].

12.10.090 Regulatory authority over chemicals and waste strength detrimental to sewage works.
(A) The board, in the name of the municipality, may bring an action to recover damages for (1) the breach of an agreement, express or implied, relating to the construction, management, or repair of sewage works under its control, including real property; or (2) injury to the personal or real property used in the sanitary disposal of sewage in a municipality located within the district.

(B) The board may recover possession of property, may bring an action for the specific performance of an agreement, and may use, in the name of the municipality, any legal or equitable remedy necessary to protect and enforce the rights and perform the duties of the department.

(C) The board may establish limits on the kinds or amounts of chemicals and the strength of the waste or other substances the board considers detrimental to the sewage works. If a person discharges sewage into the sewage works that exceeds limits set by the board, the board may order the person to cease using the sewage works upon a hearing with notice. However, if evidence indicates a public health hazard is being created, the board may summarily order the person to cease without notice or hearing. Orders of the board may be enforced by bringing an action to enjoin discharges into the sewer works in any court in Lake County having jurisdiction to hear equity actions. A person aggrieved by an order of the board is entitled to appeal the order to the Lake circuit or Lake superior court. If an order is given without notice, an appeal must be perfected within 10 days after receipt of the order or the right to appeal is considered waived. [Ord. 1548 § 2, 2013].

12.10.100 Disposition of all funds of the department of public sanitation and sanitary district.
(A) All money remaining in a fund to the credit of the board at the end of the calendar year belongs to the fund for use by the board for the purposes for which the fund was created. In addition, all money raised under this chapter shall be deposited at interest with the depository of other public funds of the municipality, with all interest collected on the fund belonging to the fund.

(B) Notwithstanding the provisions of any other statute, money collected for or belonging to a sanitary district belongs to the sanitary district, and not to any civil town in the sanitary district. This money shall be deposited in an interest bearing account, and all interest earned from this deposit shall belong to the sanitary district. If no statutory provision exists to require the crediting or deposit of this interest to a specific fund of the sanitary district, the interest shall be deposited in the sanitary district's sanitary special operating fund.

(C) Notwithstanding subsections (A) and (B) of this section, money may be transferred from the fund as provided in IC 36-1-8-4.

(D) Pursuant to IC 36-9-25-34, all revenues derived from the collection of fees for sewage treatment shall be construed to have become a part of the sanitary maintenance and general expense fund established under IC 36-9-25-32. However, user charges collected for wastewater and storm water treatment shall be deposited and held in the sewage operating fund, except any part that the board sets aside in the sanitary district bond fund established under IC 36-9-25-29 or the sinking fund established under IC 36-9-25-41. User charges collected for solid waste management services shall be deposited and held in the special sanitary district operating fund, except any part that the board sets aside in the sanitary district bond fund established under IC 36-9-25-29.

(E) The board may appropriate and set aside from the sanitary maintenance and general expense (sanitary special operating) fund an amount of money to be used as a revolving fund for the payment of necessary preliminary expenses incurred by the board in connection with proposed projects, such as making surveys, estimating cost, employing engineers and other employees, preparing plans and specifications, and all other expenses to be paid before the issuance and sale of bonds under IC 36-9-25-27.

(F) The revolving fund shall be fully repaid by the board out of the first proceeds of the sale of bonds to the extent that the expenses paid are chargeable to the cost of acquiring land or construction under a resolution adopted and confirmed under IC 36-9-25-18. The appropriations to the revolving fund shall be made in accordance with statutes governing appropriations by municipal corporations, but it is not necessary to appropriate the money set aside in the revolving fund before making expenditures from it.

(G) Money raised under this chapter may be expended only upon warrants drawn by the municipal fiscal officer upon vouchers of the board. An appropriation is not necessary, but all money raised under this chapter is considered appropriated to the respective purposes stated and is under the control of the board. The board has complete and exclusive authority to expend the money for the purposes provided, all pursuant to IC 36-9-25-37.

(H) If the legislative body repeals this chapter and dissolves the department created under this chapter, all funds shall be transferred to the control of the town council, subject to Indiana law. [Ord. 1548 § 2, 2013].

12.10.105 Special sanitary district operating maintenance and general expense fund.

(A) There is established a fund of the municipality to be known as the sanitary district operating maintenance and general expense fund, pursuant to IC 36-9-25, sections 32 and 34.

(B) The sanitary district operating maintenance and general expense fund shall be further organized by departments, as required by law, which shall consist of the following:

(1) Sewage administration department.

(2) Solid waste and sanitation department.

(C) The clerk-treasurer in consultation with the town council president shall be authorized to establish such other departments as may be deemed necessary or desirable; provided, that any new department be reported to the town council.

(D) Expenditures from this fund may only be for the purposes for which this fund is established, to carry out the purpose of the department particularly in IC 36-9-25-10 and IC 36-9-25 et seq.

(E) Appropriations. Expenditures from the fund may be made only upon appropriation by the fiscal body for the purpose for which the fund and its departments are specifically established, in the manner provided by statute for making other appropriations, and shall be disbursed only on approved accounts payable vouchers allowed by the board, all pursuant to IC 5-11-10 and 36-9-25-32(b).

(F) Investments Authorized. Pursuant to IC 5-13-9 and Chapter 3.40 HMC, money in the fund may be invested; provided, that the yields from the purchase and sale of any such investments be deposited with the fund.

(G) Fund Sources. The sanitary district operating maintenance and general expense fund consists of all moneys authorized to be collected and deposited to its credit under IC 36-9-25 et seq. Further, funds may include but not be limited to the following:

(1) User fees, licenses, permits, and other charges which may from time to time be authorized and fixed by the proper body for a lawful purpose;

(2) Fines, filing fees, and penalties;

(3) Intergovernmental revenues of any kind, taxes and charges as provided by law;

(4) Grants from federal, state, local governmental sources or from such other entities as may be provided by law;

(5) Proceeds from the liquidation of assets of the department including personal and real property, not required to be deposited elsewhere, including the sale of abandoned property, in the custody of the department, provided it is not required to be deposited in another fund pursuant to law.

(H) Preservation and Disposition of Fund Assets. All unused and unencumbered cash on deposit to the credit of the fund shall remain with sanitary district operating maintenance and general expense fund pursuant to HMC 12.10.100 and IC 36-9-25-33. [Ord. 1660 § 8, 2017].

12.10.110 Sanitary district sewage cash reserve fund.
(A) There is hereby established for the municipal wastewater/storm water utility a cash reserve fund as provided in IC 8-1.5-3-11, that shall be carried on the records of the sewage utility by providing for either monthly contributions or transfers to the cash reserve fund of surplus earnings of the utility, as may be identified by the board of sanitary commissioners.

(B) “Surplus earnings” shall be defined as those cash earnings remaining after provision has been made to take care of current obligations, including expenses of the sewage operating and maintenance fund, the sewage improvement fund, the special sanitary district operating fund and the special sanitary district bond and interest fund, and any other priority fund requirements that may be fixed by law.

(C) The funds on deposit to the credit of the fund created by this section may be used to make loans according to the provisions of this code. [Ord. 1628 § 4, 2016].

12.10.120 Loans from the sanitary district to the civil government.
(A) In addition to its authority for making loans and borrowing as set forth in IC 36-9-25-32, 36-9-25-33 and 36-9-25-39, the board of sanitary commissioners may authorize by resolution that funds of sewage works may be used to make loans to the town of Highland, provided the following:

(1) The sewage utility has on deposit to the fund or funds from which a loan may be made, unobligated cash balance(s) in the amount necessary for the loan;

(2) The sewage utility has also on deposit to the fund or funds from which a loan may be made the amount necessary to meet current expenses during the year;

(B) A loan made by the board to the town of Highland:

(1) Must be evidenced by an obligation of the municipality to which the loan is made;

(2) Must be signed by the executive;

(3) May not be for a period of greater than five years; and

(4) May bear interest at any rate as determined by the board, payable at maturity. [Ord. 1628 § 4, 2016].

12.10.130 Loans from the sanitary district to the municipal water utility.
(A) The funds on deposit to the credit of the sewage cash reserve fund established by HMC 12.10.110 may be used to make loans to department of waterworks as a utility also owned by the town of Highland, for periods not to exceed five years, at any interest rate that the board may determine.

(B) The loan shall be evidenced and carried out in the same manner as provided in HMC 12.10.120(B). The repayment of the loan and interest shall be returned to the cash reserve fund. [Ord. 1628 § 4, 2016].

---

[1] Code reviser's note: Ordinance No. 1548 adds these provisions as HMC 12.10.080. This section has been editorially renumbered as HMC 12.10.070 to avoid duplication of section numbering.

[2] Code reviser's note: Ordinance No. 1548 adds these provisions as HMC 12.10.090. This section has been editorially renumbered as HMC 12.10.080 to avoid duplication of section numbering.

Chapter 12.15

SOLID WASTE MANAGEMENT

Sections:

Article I. Regulations

12.15.005 Title of chapter.
12.15.010 Definitions.
12.15.020 Enforcement.
12.15.030 Garbage or refuse originating outside town.
12.15.040 Littering.
12.15.050 Burning garbage and rubbish.
12.15.060 Collection generally.
12.15.070 Garbage containers – Placement.
12.15.080 Recycling containers.
12.15.090 Solid waste management fees and services.
12.15.100 Appeals.
12.15.110 Liability for payment.
12.15.120 Delinquent accounts.
12.15.130 Procedures and fees for disposal of refuse.
12.15.140 Abandoned or unattended major appliances.
12.15.150 Roll-off containers.

Article I. Regulations

12.15.005 Title of chapter.

This chapter shall be referred to as the solid waste management code. [Ord. 1637 § 1, 2016].

12.15.010 Definitions.

(A) For the purpose of this chapter, the following definitions shall apply unless the context clearly indicates or requires a different meaning:

(1) “Construction and demolition debris” means rubbish generated by the construction, remodeling, or demolition of buildings or building appurtenances and includes concrete, brick, wood, roofing materials, gypsum board, piping and building fixtures (cabinets, water closets, windows, etc.).

(2) “Dwelling unit” means a dwelling, or a portion of a dwelling, used by one family for cooking, living, and sleeping purposes eligible for refuse and recycling service provided by the town of Highland.

(3) “Dwelling(s)” means a dwelling, or a portion of a dwelling, used primarily as a place of abode for one or more human beings, including apartment houses, but not including motels or hotels.

(4) “Electronic waste (e-waste)” means waste that has one or more of these components: a circuit board, electronic component (diode, resistor, capacitor, or coil), display device, computer, or electronic device. It does not include vehicles or white goods (refrigerators, ranges, water heaters, or other similar large appliances).

(5) “Garbage” means putrescible animal and vegetable wastes resulting from the handling, preparation, cooking and consumption of food.

(6) “Recyclables” means paper, cardboard, magazines, glass bottles (clear, brown, green), tin cans, steel cans, aluminum cans, plastic containers or other such items that the town deems to be recyclable in nature.

(7) “Refuse” means all putrescible and nonputrescible wastes (except human body wastes), including garbage and rubbish, and yard waste.

(8) "Rubbish" means nonrecyclable putrescible and nonputrescible solid waste, both combustible and noncombustible, including but not limited to paper, cardboard, bottles, tin cans, steel cans, aluminum cans, glass, bedding, rags, crockery, wood, furniture and appliances.

(9) "Yard waste" means compostable organic waste resulting from the maintenance of lawns, gardens, landscapes and trees including grass clippings, tree branches, hedge trimmings, garden waste, and leaves. "Yard waste" does not include sod, dirt, rock, sand, etc. [Ord. 1637 § 1, 2016].

12.15.020 Enforcement.
The director of public works as superintendent of the sewage works, or his associate department directors, shall have authority to enforce this chapter. [Ord. 1637 § 1, 2016].

12.15.030 Garbage or refuse originating outside town.
No person shall dump garbage and/or rubbish within the town of Highland and the boundaries of the sanitary district unless when such garbage and/or rubbish has its origin within the town of Highland and the boundaries of the sanitary district. [Ord. 1637 § 1, 2016].

12.15.040 Littering.
It shall be an offense for any person to throw or deposit on any lot, ground, premises, right-of-way, street, alley, drive, sidewalk or parkway any garbage or rubbish except in containers as herein provided. [Ord. 1637 § 1, 2016].

12.15.050 Burning garbage and rubbish.
It shall be an offense for any person to openly burn or ignite refuse, garbage, or rubbish. [Ord. 1637 § 1, 2016].

12.15.060 Collection generally.
(A) The collection and disposal of refuse within the corporate limits of the town of Highland and the boundaries of the sanitary district shall be administered, operated, conducted, and/or maintained by and through the board of sanitary commissioners under the terms and the provisions of this chapter. The town of Highland shall have the right, exercisable by its board of sanitary commissioners, to appoint or contract with one or more persons, exclusively, or concurrently with the activities of the town, to collect and/or dispose of refuse, garbage or rubbish.

(B) Any person or persons owning or leasing any residence or establishment which fails to comply with the provisions of this chapter shall promptly remove and dispose of the garbage and rubbish accumulated by such person or persons at their own expense and in a sanitary manner.

(C) Except as otherwise provided in subsection (D) of this section, commercial units which include a building or part thereof or establishment for the conduct of a single business, apartment houses of more than two units, and except those three- and four-dwelling unit apartment houses that have separate water metered service and individual billing to each dwelling unit, motels, hotels, civic and athletic centers, and all other establishments which produce refuse, but are not dwellings, shall be responsible for the collection and disposal of refuse, garbage and rubbish in conjunction therewith.

(D) Option to Participate. Commercial units which include a building or part thereof or establishment for the conduct of a single business and also have a single dwelling unit, which would not otherwise participate in the municipal solid waste management program, may apply to the public works director for a "waiver and option to participate letter," which would allow participation in the municipal solid waste program.

(1) In considering any application to participate, the public works director shall consider the following matters related to the delivery of service:

(a) Whether or not the applicant's participation materially affects the effectiveness of any or all of the services as outlined in HMC 12.15.090.

(b) Whether or not the applicant's participation materially affects the efficiency of any or all of the services as outlined in HMC 12.15.090.

(c) Whether or not the applicant's participation is equitable and the participation is in the public interest.

(2) If the public works director determines and finds favorably for an applicant, a letter of waiver will be issued to the particular participant, a copy of which will be filed with the board of sanitary commissioners and office of the clerk-treasurer and which will remain in effect for the particular participant only.

(3) If an option to participate is granted, the participant shall be subject to the relevant provisions of this chapter, including the requirement to pay the monthly solid waste management fees as set forth in HMC 12.15.090.

(4) The public works director shall be authorized to make reasonable rules or conditions related to the "waiver and option to participate letter" with which the participant shall comply.

(5) Failure to comply with the rules or conditions of the waiver may result in revocation of the waiver and prevention from participation in the solid waste management program of the town.

(E) Limited Option for Exemption. Commercial units, which include a building or part thereof or establishment committed to the conduct of educational, literary, scientific, religious, or charitable purposes and also have a single dwelling unit, which would otherwise participate in the municipal solid waste management program, may apply to the public works director for an "exemption letter," which would allow extrication from the single dwelling unit in the municipal solid waste program.

(1) In considering any application to participate, the public works director shall consider all the matters set forth in HMC 12.15.090(D)(1) and whether or not the single-family dwelling will be used for educational, literary, scientific, religious, or charitable purposes and not serve any further residential purpose.

(2) If the public works director determines and finds favorably for an applicant, a letter of exemption will be issued to the particular participant, a copy of which will be filed with the office of the clerk-treasurer and the board of sanitary commissioners and which will remain in effect for the particular participant only.

(3) The public works director shall be authorized to make reasonable rules or conditions related to the "waiver and exemption letter" with which the participant shall comply.

(4) Failure to comply with the rules or conditions of the waiver may result in revocation of the exemption and resumption of billing for and participation in the solid waste management program of the town.

(F) No person or other entity shall collect, remove, pilfer, cremate, dispose or otherwise deal in refuse within the corporate limits of the town unless expressly authorized to do so by the board of sanitary commissioners.

(G) It shall be unlawful to conduct or condone any unauthorized collections of recyclable materials, which are set out by town residents as part of the designated recycling program. Such unauthorized collections may reduce volumes of materials collected as part of a designated program and thereby threaten the economic liability of the authorized program.

(H) The collection and disposal of refuse and recyclables shall be provided to each single- and two-family dwelling unit and to each three- and four-family dwelling unit; provided, that each dwelling unit with a three- and four-family dwelling has separate water meter service with individual billing to each dwelling unit. Collection and disposal is subject to the following exceptions:

(1) Furniture and appliances shall be limited to one item per week.

(2) Appliances containing refrigerant gases are excluded unless properly evacuated of refrigerant gases.

(3) Carpeting shall be cut and rolled into pieces that do not exceed 30 pounds and are no longer than three feet in length.

(4) Construction and demolition debris is excluded.

(5) Hazardous waste or medical waste is excluded.

(6) Concrete is excluded.

(7) Tires are excluded.

(8) Electronic waste is excluded.

(9) Refuse and rubbish that is uncontained or stored in a nonprovided container and is associated with a reduced service volume user. [Ord. 1637 § 1, 2016].

12.15.070 Garbage containers – Placement.
(A) Every tenant or owner of a dwelling or dwelling unit within the town of Highland and the boundaries of the sanitary district shall be provided suitable and sufficient containers for the collection and disposal of solid waste and garbage.

(B) Refuse containers will be provided in two sizes to support the service volume, standard service and reduced service. Standard service containers will be 95 gallons. Reduced service containers will be 65 gallons. Service fees will be differentiated for each. The provided refuse containers must be used as they are designed to be emptied by standard mechanical equipment installed on the collection vehicle. Said containers shall be kept clean, neat, and sanitary at all times.

(C) The provided containers for the deposit of refuse shall be placed for collection at ground level by the tenant or resident served within the right-of-way of a street or alley at the discretion of the board of sanitary commissioners for dwellings, and shall be accessible and not more than 15 feet from the side of the street or alley from which collection is to be made. The containers shall be placed in an orderly and sanitary manner on the days designated for the collection and removal of refuse by the board. The containers shall be removed to the rear of the premises and out of sight as viewed from the street after collection is made and on the same date of collection.

(D) Refuse containers shall remain with the dwelling unit even upon changes of residents or transfers of ownership. [Ord. 1637 § 1, 2016].

12.15.080 Recycling containers.
(A) The town of Highland and the department of public sanitation shall provide to each dwelling unit one container to be used for the collection and disposal of recyclables.

(B) In addition to any terms set forth in any contract for recycling collection services which may be in force, the public works director shall have the authority to identify additional recyclable articles under the solid waste management program.

(C) Recycling containers, as provided by the town of Highland and the department of public sanitation, or by contracted waste collector, shall remain the property of the provider. Damaged containers shall be replaced at no cost to the customer. Lost or stolen containers may be replaced after payment of a replacement fee in an amount set forth in the fee schedule in HMC 12.15.090.

(D) Recycling containers shall remain with the dwelling unit even upon changes of residents or transfers of ownership.

(E) The provided containers for recycling shall be placed for collection at ground level by the tenant or resident served within the right-of-way of a street or alley at the discretion of the board of sanitary commissioners for dwellings, and shall be accessible and not more than 15 feet from the side of the street or alley from which collection is to be made. The containers shall be placed in an orderly and sanitary manner on the days designated for the collection and removal of refuse by the board. The containers shall be removed to the rear of the premises and out of sight as viewed from the street after collection is made and on the same date of collection. [Ord. 1637 § 1, 2016].

12.15.090 Solid waste management fees and services.[1]
(A) Fees shall be charged in support of the solid waste management program of the town. The fees shall be reasonable and just and reasonably related to support the following activities and services of the town:

(1) Collection and disposal of garbage and refuse associated with qualified residential dwelling units, placed for collection at ground level, and not more than 15 feet distant from the side of the street from which collection is made.

(2) Collection and disposal of garbage and refuse associated with qualified residential dwelling units, that have been identified as recyclable articles by the town of Highland and the department of public sanitation, placed for collection at ground level in the container provided by the town, and not more than 15 feet distant from the side of the street from which collection is made.

(3) Collection and disposal of tree leaves, associated with qualified residential dwelling units, seasonally placed for collection at ground level, and not more than 15 feet distant from the side of the street from which collection is made.

(4) Collection and disposal of articles of garbage and refuse associated with qualified residential dwelling units that have been identified as yard waste by the town of Highland and the department of public sanitation, placed for collection at ground level, properly contained and not more than 15 feet distant from the side of the street from which collection is made.

(5) On-demand collection and disposal of branches or fallen tree limbs associated with qualified residential dwelling units, placed for collection at ground level and not more than 15 feet distant from the side of the street from which collection is made.

(B) The solid waste management fees, which shall be payable monthly and charged to qualified residential dwelling units shall be based upon the presumptive service volume according to the following:

(1) Standard service volume will be provided to qualified residential dwelling units that are principally occupied by a person or persons who are not described in subsection (B)(2) of this section.

(2) Reduced service volume will be provided to qualified residential dwelling units that are principally occupied by persons who are 65 years of age or older, and upon approved applications to the public works director. “Principally occupied by persons who are 65 years of age or older” shall mean that at least 50 percent of the regular occupants in the dwelling are persons 65 years of age or older, or at least one occupant owner of a jointly owned dwelling is 65 years of age or older.

(3) Reduced service volume may be provided to other users upon special application to the public works director or his designee, expressing the reasons for such service and establishing to the satisfaction of the public works director or his designee that reduced service volume is warranted.

(C) The solid waste management fees shall be payable monthly and shall be billed, whenever practicable to do so, with the utility bill associated with charges for water, wastewater, stormwater and other services. Solid waste management fees shall be deposited into the sanitary district special operating fund.

(D) Waiver of Fees. The solid waste management fees which shall be imposed under this chapter may be temporarily waived for a time certain pursuant to the following:

(1) Person(s) desiring the waiver shall contact the billing authority and apply for such a waiver; and

(2) Person(s) desiring the waiver shall have paid a fee for a temporary cessation of water service in the amount set forth in the schedule of fees set forth in Chapter 12.05 HMC.

(3) The duration of the waiver will be concurrent with the duration of the cessation of water service. The waiver ceases or expires upon resumption of water service.

(E) Alternative Waiver (Refund) of Fees. For those persons for whom a temporary water service cessation is impracticable, owing to a water-based heating system, who would otherwise seek a waiver under the provisions of subsection (D) of this section, solid waste management fees may be refunded for a time certain, pursuant to the following:

(1) Person(s) desiring the refund shall contact the billing authority and apply for such refund; and

(2) Person(s) desiring the refund shall have paid a special cessation of solid waste management services fee in the amount set forth in the schedule of fees set forth in this chapter.

(3) The refunds will be of those fees paid during the time period of the desired temporary cessation of service, owing to extended absences from the customer residence.

(4) In order to determine the length of time for which a refund may be made, the following apply:

(a) No refund will be given for any month in which there is evidence of more than minimum water consumption; and

(b) No refund will be given without reasonable documentation of actual absence, which may include but not be limited to out-of-state utility bills, active bank accounts and the like.

(F) Limited Waiver of Fees for Certain Two-Family Dwellings. In the event that one unit of a two-unit dwelling, without a separate water meter and/or account status, becomes vacant, for a period of not less than four months, the property owner may request a waiver of the solid waste management fee charged for the unoccupied unit pursuant to the following:

(1) Person(s) who desire this limited waiver shall contact the public works director, and apply for such a waiver, not sooner than the first day of the month following the date of the vacancy; and

(2) The duration of the limited waiver of fees in this subsection shall be for four months. Persons may renew the waiver with the public works director.

(3) Unless specifically renewed, the public works director will advise the billing authority that the solid waste management fee charges shall resume, in full, beginning on the first month following the waiver's lapse.

(4) Person(s) shall notify the public works director in the event that the vacant unit becomes occupied before the fee waiver expires. The solid waste management fee shall be reinstated and charged beginning in the month that the unit becomes occupied.

(5) In the event that the owner fails to notify the public works director prior to the reoccupation of the vacant unit, all waived solid waste management fees shall be reinstated, back to the first day of the waiver period. Application shall be on forms to be provided by the office of the clerk-treasurer and shall include name, address, account number, and the specific reason for the request.

(G) The solid waste management and associated fees shall be charged according to the following schedule and shall remain in effect as indicated until such time as they may be modified or rescinded by passage and adoption of an ordinance, pursuant to the terms of IC 36-9-25 et seq.:

Solid Waste Management Fees Schedule

Monthly Solid Waste Management Fees

(1)	For the period beginning July 1, 2013:		
	(a)	Qualified dwelling unit – 95-gallon refuse cart:	$17.00
	(b)	Qualified dwelling unit – 65-gallon refuse cart:	$16.00
(2)	For the period beginning April 1, 2014:		
	(a)	Qualified dwelling unit – 95-gallon refuse cart:	$17.71
	(b)	Qualified dwelling unit – 65-gallon	$16.71

Monthly Solid Waste Management Fees

		refuse cart:	
(3)	For the period beginning April 1, 2015:		
	(a)	Qualified dwelling unit – 95-gallon refuse cart:	$18.44
	(b)	Qualified dwelling unit – 65-gallon refuse cart:	$17.44
(4)	For the period beginning April 1, 2016:		
	(a)	Qualified dwelling unit – 95-gallon refuse cart:	$19.18
	(b)	Qualified dwelling unit – 65-gallon refuse cart:	$18.18
(5)	For the period beginning April 1, 2017:		
	(a)	Qualified dwelling unit – 95-gallon refuse cart:	$19.93
	(b)	Qualified dwelling unit – 65-gallon refuse cart:	$18.93
(6)	For the period beginning April 1, 2018:		
	(a)	Qualified dwelling unit – 95-gallon refuse cart:	$20.71
	(b)	Qualified dwelling unit – 65-gallon refuse cart:	$19.71

[Ord. 1637 § 1, 2016].

12.15.100 Appeals.

Any person aggrieved by a regulation of, a decision of, or a fee charged by the director shall have the right of appeal to the board of sanitary commissioners who shall have the authority to confirm, modify, or reject any such regulation, decision, or fee. If the aggrieved party does not accept the findings and order of the board of sanitary commissioners, any such finding or order shall be appealable to the courts as provided by law. [Ord. 1637 § 1, 2016].

12.15.110 Liability for payment.

The user charges shall be billed to the person being billed for municipal utility service at the residence dwelling, unless by contract with the town of Highland and the department of public sanitation, and other persons assume such responsibility. If a tenant or occupant is billed, the owner shall in no way be relieved of the liability in the event payment is not made by the tenant or occupant as herein provided. Such owner shall have the right to examine the town of Highland and the department of public sanitation's collection records to ascertain whether such charges have been paid. [Ord. 1637 § 1, 2016].

12.15.120 Delinquent accounts.[2]

(A) How Delinquencies Arise. Fees levied pursuant to this chapter shall be due and payable on or before the due dates shown on the bills. Any fee not paid by the due date shall be considered delinquent. Such delinquent fee together with any applicable interest shall be collectible as hereinafter set forth.

(B) As is provided by statute, all rates and charges that are not paid when due are hereby declared to be delinquent, and a penalty of 10 percent of such rates or charges shall thereupon attach thereto. The time at which such rates or charges shall be paid is now fixed as the due date fixed for potable water. The penalty shall attach at 30 days after the date of mailing of the bill, pursuant to HMC 12.20.350. [Ord. 1637 § 1, 2016].

12.15.130 Procedures and fees for disposal of refuse.

(A) Permitted Uses. The disposal of compactable refuse by residents of the town shall be permitted in accordance with this section.

(B) Prohibited Uses. It shall be an offense for commercial dumping or disposal of refuse by commercial vendors or any contractors. Further, nonresidents of the town are prohibited under penalty from disposing of refuse at the Highland public works facility.

(C) Permit and Fees.

(1) Any person dumping refuse at the Highland public works facility shall first secure a “dumping permit” from the public works office. The permit shall identify the name, address, and phone number of the permittee; vehicle type and license number; description of the refuse to be disposed; and disposal fee. Dumping refuse without a valid permit is prohibited; said permit shall be presented to the dumpster attendant prior to dumping refuse, and the dumpster attendant shall verify that the permit is proper for the refuse being disposed.

(2) Fees for the disposal of residential refuse by residents of the town of Highland served by the department of public sanitation shall be collected by the public works office according to the following schedule:

(a) Compactor Rate. Construction and demolition debris; extra trash (less than four feet in length):

1. Pickup truck, van, or one-ton dump truck (full): $10.00.

2. Minimum fee (car load): $5.00.

(b) Open Container Rate. Extra trash; construction and demolition debris (over four feet in length):

1. Pickup truck, van, or one-ton dump truck: $20.00.

2. Furniture, appliances, mattresses, and the like (each piece): $5.00.

(c) Tree Branch Disposal. No charge.

(d) Concrete, up to one cubic yard: $5.00.

(D) Concrete. Disposal of concrete at the Highland public works facility is limited to no more than one cubic yard.

(E) Hours. The Highland public works facility shall be available for the disposal of refuse in accordance with the provisions of this chapter from Monday through Saturday from the hours of 8:30 a.m. through 3:30 p.m.

(F) Temporary Fee Waiver by Order of the Board of Sanitary Commissioners President. Whenever an intense weather or other natural event has occurred which has unduly caused or created an unusual and involuntary increase in the volume of trash or debris experienced by residents of the town, the board of sanitary commissioners hereby authorizes that the board of sanitary commissioners president, when in his opinion the public good would require it, may issue a written order, directed to the public works director and the clerk-treasurer, indicating that for the foregoing reasons set forth in this chapter, the fees set forth in the schedule under this section for refuse services at the public works facility are waived for residents, with such waiver to be for a time certain and not to exceed a period of three weeks. Further, such order should be reported to the board of sanitary commissioners for its information in a timely manner. [Ord. 1637 § 1, 2016].

12.15.140 Abandoned or unattended major appliances.

(A) Abandoning or Leaving Freezers, Refrigerators, Iceboxes, Ice Chests, and Other Major Appliances. The provisions of this section shall apply to any icebox, refrigerator, freezer, ice chest, dryer, washer, or other major appliance having a capacity of one and one-half cubic feet or more. It shall be an offense for any person, firm, corporation, or organization to abandon any such refrigerator, freezer, icebox, ice chest, or other major appliance any place within the town of Highland and the boundaries of the sanitary district.

(B) Further, it shall be an offense for any person to leave any such refrigerator, freezer, icebox, ice chest, or other major appliance unattended out-of-doors. The purpose of this section is to prevent children from dying for lack of air as a result of being locked in such a refrigerator, icebox, ice chest, freezer, or other major appliance.

(C) Removal of Hinges and Doors. Any person, firm, corporation, or organization that shall have abandoned or left out-of-doors a refrigerator, freezer, icebox, ice chest, or other major appliance shall immediately take steps to avoid the danger of a child being trapped inside by removing the door of such freezer, refrigerator, icebox, ice chest, or other major appliance before taking the same out-of-doors. [Ord. 1637 § 1, 2016].

12.15.150 Roll-off containers.

(A) Private Roll-Off Containers. No person, firm, corporation, or organization shall place a roll-off container, POD, or closed container upon a public street or alley without first securing a permit from the town. Application shall be made to the town of Highland and the department of public sanitation on prescribed forms that shall include the name, location, size, type; dates and times container shall be placed upon the public way; name and address of the company supplying said container; and the description of the debris to be disposed. All containers placed upon a public street or alley shall be equipped with reflectors and flashing lights for the safety of the public.

(B) Any company that provides roll-off container service shall have on file with the town of Highland and the department of public sanitation, a form of surety in the amount not less than $5,000, to cover any damages to pavement or public infrastructure that may be damaged while unloading, loading, or placing of roll-off containers.

(C) Permit fees for the placement of a roll-off container upon a public street may be collected by the office of the clerk-treasurer or the office of the public works director, according to the following schedule:

(1) Up to three days: $25.00.

(2) Each additional day: $10.00. [Ord. 1637 § 1, 2016].

---

[1] Code reviser's note: Section 2(B) of Ord. 1637 states "That the provisions set forth in Section 1 of this ordinance particularly amending Section 12.15.090(B) of the code, shall be construed to be effective from July 1, 2013, and all actions since that date made according to and consistent with the amended provisions are ratified, pursuant to IC 36-1-2-16." Section 2(C) of Ord. 1637 provides "That the provisions set forth in Section 1 of this ordinance particularly amending Sections 12.15.090(C) and 12.15.120 of the code, shall be construed to be effective from January 1, 2012, and all actions since that date made according to and consistent with the amended provisions are ratified, pursuant to IC 36-1-2-16."

[2] Section 2(C) of Ord. 1637 provides "That the provisions set forth in Section 1 of this ordinance particularly amending Sections 12.15.090(C) and 12.15.120 of the code, shall be construed to be effective from January 1, 2012, and all actions since that date made according to and consistent with the amended provisions are ratified, pursuant to IC 36-1-2-16."

Chapter 12.20

SEWERS AND SEWAGE DISPOSAL

Sections:

Article I. General Provisions

12.20.010 Definitions.
12.20.020 District to require connections.
12.20.030 Use of sewers required.
12.20.040 Entry powers, inspection powers, and the like, of governmental officials.
12.20.050 Billing and collection of charges and rates.
12.20.060 Special agreements.
12.20.070 Unauthorized breaking, tampering, and the like.
12.20.080 Compliance with state and federal requirements.
12.20.090 Unlawful connections.
12.20.100 Violations – Notice – Liability – Remedies.

Article II. Building Sewers and Connections

12.20.110 Connection permit.
12.20.120 Costs of, and liabilities from, connections.
12.20.130 Separate and independent building sewer required.
12.20.140 Use of old building sewers.
12.20.150 Building sewer specifications.
12.20.160 Building sewer size, slope, and location.
12.20.170 Building sewer lifts – Ejectors, and the like.
12.20.180 Joints.
12.20.190 Connections to public sewer.
12.20.200 Excavations, backfilling, and the like.

Article III. Discharge Regulations

12.20.210 Storm water, surface water, cooling water, and the like.
12.20.220 Certain harmful wastes totally prohibited.
12.20.230 Discharges superintendent may regulate or prohibit.
12.20.240 Pretreatment facilities.
12.20.250 Inspection, and the like, of nonresidential discharges.
12.20.260 Flow measuring and sampling facilities – Control manhole.
12.20.270 Interceptors.
12.20.280 Inspection of discharges to review rates.
12.20.290 Notice to district of spills, unusual flows, and the like.

Article IV. User Rates and Charges

12.20.300 Definitions.
12.20.310 General basis, classification, and the like.
12.20.320 Rates and charges established – Payment required.
12.20.330 Adequacy and purposes of rates, charges and fees.
12.20.340 Special adjustments.
12.20.350 Wastewater rates and charges – Collection and billing.
12.20.360 Annual review.
12.20.370 District to make certain regulations.
12.20.380 Charges from Hammond sanitary district.

Article V. Sewer and Extension Fund

12.20.390 Establishment.
12.20.400 Fund resources.
12.20.410 Appropriation of money for sewage works.
12.20.420 Contracts for sewage works.

Article I. General Provisions

12.20.010 Definitions.
For the purpose of this chapter, the following definitions shall apply unless the context clearly indicates or requires a different meaning:

"Biochemical oxygen demand" or "BOD" means the quantity of dissolved oxygen in milligrams per liter required during stabilization of the decomposable organic matter by aerobic biochemical action under standard laboratory procedures for five days at 20 degrees centigrade.

The laboratory determinations shall be made in accordance with procedures set forth in Standard Methods.

"Board" means the board of sanitary commissioners of the sanitary district of Highland, Indiana, or any duly authorized officials acting in its behalf.

"Building (or house) drain" means that part of the lowest horizontal piping of a building drainage system which receives the discharge from soil, waste and other drainage pipes inside the walls of the buildings and conveys it to a point approximately four feet outside the foundation wall of the building.

"Building (or house) sewer" means the pipe which is connected to the building (or house) drain at a point approximately four feet outside the foundation wall of the building and which conveys the building's discharge from that point to the public sewer or other place of disposal.

"Chemical oxygen demand (COD)" means a measure of the oxygen equivalent of that portion of the organic matter in a sample that is susceptible to oxidation by a strong chemical oxidant. The laboratory determination shall be made in accordance with procedures set forth in Standard Methods.

"Combined sewer" means a sewer intended to receive both wastewater and storm or surface water.

"Compatible pollutant" means biochemical oxygen demand, suspended solids, pH, and fecal coliform bacteria, plus pollutants identified in the NPDES permit if the treatment works was designed to treat such pollutants, and in fact does remove such pollutants to a substantial degree.

The term "substantial degree" is not subject to precise definition, but generally contemplates removals in the order of 80 percent or greater. Minor incidental removals in the order of 10 to 30 percent are not considered substantial. Examples of the additional pollutants which may be considered compatible include:

(A) Chemical oxygen demand;

(B) Total organic carbon;

(C) Phosphorus and phosphorus compounds;

(D) Nitrogen and nitrogen compounds; and

(E) Fats, oils, and greases of animal or vegetable origin (except as prohibited where these materials would interfere with the operation of the treatment works).

"District" means the sanitary district of Highland, acting by and through the board of sanitary commissioners.

“Effluent” means the water, together with any wastes that may be present, flowing out of a drain, sewer, receptacle or outlet.

“Fecal coliform” means any of a number of organisms common to the intestinal tract of humans and animals, whose presence in sanitary sewage is an indicator of pollution.

“Floatable oil” means oil, fat, or grease in a physical state, such that will separate by gravity from wastewater by treatment in a pretreatment facility approved by the district.

“Garbage” means any solid wastes from the preparation, cooking or dispensing of food and from the handling, storage or sale of produce.

“Incompatible pollutant” means any pollutant that is not defined as a compatible pollutant, including nonbiodegradable dissolved solids.

“Industrial sewage” means any solid, liquid or gaseous substance or form of energy discharged, permitted to flow or escaping from an industrial, manufacturing, commercial or business process or from the development, recovery or processing of any natural resources carried on by any person, exclusive of sanitary sewage.

“Infiltration” means the water entering a sewer system, including building drains and sewers, from the ground, through such means as, but not limited to, defective pipes, pipe joints, connections, or manhole walls. “Infiltration” does not include and is distinguished from inflow.

“Infiltration inflow” means the total quantity of water from both infiltration and inflow without distinguishing the source.

“Inflow” means the water discharge into a sewer system, including building drains and sewers, from such sources as, but not limited to: roof leaders, cellars, yard and area drains, foundation drains, unpolluted cooling water discharges, drains from springs and swampy areas, manhole covers, cross-connections from storm sewers, and combined sewers, catch basins, storm waters, surface runoff, street wash waters or drainage. “Inflow” does not include, and is distinguished from, infiltration.

“Inspector” means the person or persons duly authorized by the district, through the board, to inspect and approve the installation of building sewers and their connection to the public sewer system.

“Major contributing industry” means an industry that:

(A) Has a flow of 50,000 gallons or more per average work day;

(B) Has a flow greater than five percent of the flow carried by the municipal system receiving the waste;

(C) Has in its waste a toxic pollutant in toxic amounts as defined in standards issued under Section 307(a) of PL 92.500; or

(D) Is found by the permit issuance authority, in connection with the issuance of an NPDES permit to the publicly owned treatment works receiving the waste, to have significant impact, either singly or in combination with other contributing industries, on that treatment works or upon the quality of effluent from that treatment works.

Normal Domestic Sewage. This term shall have the same meaning as defined in this chapter.

“NPDES permit” means a permit issued under the National Pollutant Discharge Elimination System for discharge of wastewaters to the navigable waters of the United States pursuant to Section 402 of PL 92-500.

“Outlet” means any outlet, natural or constructed, which is the point of final discharge of sewage or of treatment plant effluent into any watercourse, pond, ditch, lake or other body of surface or ground water.

“Person” means any and all persons, natural or artificial, including any individual, firm, company, municipal or private corporation, association, society, institutions, enterprise, governmental agency or other entity.

"pH" means the logarithm (to the base 10) of the reciprocal of the hydrogen ion concentration of a solution expressed in gram-atoms per liter of solution.

"Pretreatment" means the treatment of industrial sewage from privately owned industrial sources prior to introduction into a public treatment works.

"Primary sewer main" means the public sewer main which is required to transport sewage from the property line of the nearest prospective customer to the proposed point of connection at the sewage works' existing sewer main.

"Private sewer" means a sewer which is not owned by a public authority.

"Properly shredded garbage" means the wastes from the preparation, cooking, and dispensing of food that has been shredded to such a degree that all particles will be carried freely under the flow conditions normally prevailing in public sewers, with no particle greater than one-half inch in any dimension.

"Public sewer" means a primary sewer or secondary sewer in which all owners of abutting property have equal rights and which is controlled by the sewage works.

"Receiving stream" means the watercourse, stream or body of water receiving the waters finally discharged from the sewage treatment plant.

"Sanitary sewage" means sewage discharged from the sanitary conveniences of dwellings (including apartment houses, hotels and motels), office buildings, factories or institutions and free from storm water, surface water and industrial wastes.

"Sanitary sewer" means a sewer which carries sewage and to which storm, surface and ground waters and unpolluted industrial waste waters are not intentionally admitted.

"Secondary sewer main" means the public sewer main which is required to provide services from a prospective customer to the primary sewer main.

"Service charge" means the basic charge levied on all users of the public sewerage system for wastes which do not exceed in strength the concentration values above which a surcharge will be made.

"Sewage" means the water-carried wastes from residences, business buildings, institutions and industrial establishments, singular or in any combination, together with such ground, surface and storm waters as may be present.

"Sewage treatment plant" means the arrangement of devices, structures and equipment used for treating and disposing of sewage and sludge.

"Sewage works" means the organization and all facilities for collecting, transporting and pumping of sewage, namely the sewerage system.

"Sewer" means a pipe or conduit for carrying sewage or other waste liquids.

"Sewerage system" or "sewage system" means the network of sewers and appurtenances used for collecting, transporting and pumping sewage to the sewage treatment plant.

"Slug" means any discharge of water, sewage or industrial waste which in concentration of any given constituent or in quantity of flow exceeds for any period of duration longer than 15 minutes more than five times the average 24-hour concentration or flows during normal operation.

"Standard Methods" means the laboratory procedures set forth in the latest edition, at the time of analysis, of Standard Methods for the Examination of Water and Wastewater, prepared and published jointly by the American Public Health Association, the American Water Works Association and the Water Pollution Control Federation, incorporated herein by reference and made a part of this code, with two copies on file in the office of the clerk-treasurer and available for public inspection, pursuant to IC 36-1-5-4, also as set forth in Guidelines

Establishing Test Procedures for Analysis of Pollutants, Regulation 40 CFR 136, published in the Federal Register on October 16, 1973.

“Storm sewer” means a sewer which carries storm and surface water drainage but excludes sanitary and industrial sewage.

“Superintendent” means the superintendent of the district or his duly authorized representative.

“Surcharge” means the extra charges for sewerage service assessed customers whose sewage is of such a nature that it imposes upon the treating sewage works a burden greater than that covered by the basic service charge.

“Suspended solids” or “SS” means solids which either float on the surface of or are in suspension in water, sewage or other liquid and which are removable by laboratory filtration.

Their concentration shall be expressed in milligrams per liter. Quantitative determinations shall be made in accordance with procedures set forth in Standard Methods.

“Total revenue” means that revenue obtained from bimonthly billing for the use of and service rendered by the sewage system and does not include front foot assessments, permit or inspection fees or other charges.

“Total solids” means the sum of suspended and dissolved solids.

“Town” means the town, acting by and through the Highland sanitary district board of sanitary commissioners.

“Toxic amount” means concentrations of any pollutant or combination of pollutants, which upon exposure to or assimilation into any organism will cause adverse effects, such as cancer, genetic mutations, and physiological manifestations, as defined in standards issued pursuant to Section 307(a) of PL 92-500.

“Unpolluted water” means water of quality equal to or better than the effluent criteria in effect, or water that would not cause violation of receiving water quality standards and would not be benefited by discharge to the sanitary sewers and wastewater treatment facilities provided.

“Volatile organic matter” means the material in the sewage solids transformed to gases or vapors when heated at 550 degrees centigrade for 15 to 20 minutes.

“Watercourse” means a channel in which a flow of water occurs either continuously or intermittently. [Ord. 764, 1978; amended during 2012 recodification. Code 1983 § 17-16. Code 2000 § 171.01].

12.20.020 District to require connections.
(A) The district shall take all actions or proceedings necessary and proper to require connection to the sewage works’ sewage system of all property within the district limits on which construction is started after the effective date of the ordinance from which this article is derived, where sewage is discharged for any and all purposes.

(B) In the event the sewage works deems it inadvisable to extend sewer mains to the real estate upon which such construction is started, as described above, because of the cost of such extension in relation to the revenue anticipated to be received from customers to be served thereby, the provisions of subsection (A) of this section will not apply. It shall be the intent of this chapter, insofar as possible, to cause all such property to be connected with the sewage works system. [Ord. 764, 1978. Code 1983 § 17-17. Code 2000 § 171.02].

12.20.030 Use of sewers required.
(A) It shall be unlawful for any person to place, deposit or permit to be deposited in an unsanitary manner upon public or private property within the district or in any area under the jurisdiction of the district any human or animal excrement, garbage or other objectionable waste.

(B) It shall be unlawful to discharge to any natural outlet within the district, or in any area under the jurisdiction of the district, any sanitary sewage, industrial waste or other polluted waters, except where suitable treatment has been provided in accordance with subsequent provisions of this chapter.

(C) No person shall place, deposit, or permit to be deposited in any unsanitary manner on public or private property within the jurisdiction of the district any wastewater or other polluted waters except where suitable treatment has been provided in accordance with provisions of this chapter and the NPDES permit. [Ord. 764, 1978. Code 1983 § 17-18; Code 2000 § 171.03].

Penalty, see HMC 1.05.170.

12.20.040 Entry powers, inspection powers, and the like, of governmental officials.
(A) The superintendent, inspector, and other duly authorized employees of the district, state water pollution control employees and U.S. Environmental Protection Agency employees bearing proper credentials and identification shall be permitted to enter all properties for the purposes of inspection, observation, measurement, sampling, and testing in accordance with the provisions of this chapter. Entry shall occur during reasonable business hours. Entry shall be with the consent of a rightful occupant of the premises, except where a public safety emergency justifies a warrantless entry. If entry is refused, a warrant may be procured to inspect the premises under the terms of IC 36-7-9-15. The superintendent or his representatives, state water pollution control employees and U.S. EPA employees shall have no authority to inquire into any processes including metallurgical, chemical, oil, refining, ceramic, paper, or other industries beyond that point having a direct bearing on the kind and source of discharge to the sewers or waterways or facilities for waste treatment.

(B) While performing the necessary work on private properties referred to in subsection (A) of this section, the superintendent or duly authorized employees of the district shall observe all safety rules applicable to the premises established by the company and the company shall be held harmless for injury or death to the district employees and the district shall indemnify the company against loss or damage to its property by district employees and against liability claims and demands for personal injury or property damage asserted against the company and growing out of the gauging and sampling operation, except as such may be caused by negligence or failure of the company to maintain safe conditions as required in HMC 12.20.260.

(C) The superintendent and other duly authorized employees of the district bearing proper credentials and identification shall be permitted to enter all private properties through which the district holds a duly negotiated easement for the purposes of, but not limited to, inspection, observation, measurement, sampling, repair, and maintenance of any portion of the sewage works lying within said easement. All entry and subsequent work, if any, on said easement, shall be done in full accordance with the terms of the duly negotiated easement pertaining to the private property involved. [Ord. 764, 1978; amended during 2012 recodification. Code 1983 § 17-19. Code 2000 § 171.04].

12.20.050 Billing and collection of charges and rates.
(A) Sewage service bills shall be rendered pursuant to the billing and reading frequencies and practices of the municipal water utility, all pursuant to Chapter 12.05 HMC. Service bills shall be payable at the same time as water service bills of said utility are payable. Such sewage service bills shall be based upon the rates and charges for the use of and service rendered by the sewage works, as described in this chapter. The rates and charges may be billed to the tenant or tenants occupying the properties served, unless otherwise requested in writing by the owners; but such billings shall in no wise relieve the owner from liability in the event payment is not made as herein required. The owners of the properties served, which are occupied by tenants, shall have the right to examine the collection records of the district for the purpose of determining whether such rates and charges have been paid by such tenants; provided, that such examination shall be made at the office at which said records are kept and during the hours that such office is open for business.

(B) The rates or charges made pursuant to the terms of this chapter against any lot, parcel of real estate or building that is connected with and uses the sewage works by or through any part of the sewage system of the district, or that in any way uses or is served by such works, shall be a lien, and the same are hereby declared, made and constituted a lien upon and against any such lot, parcel of real estate or building. Such lien, after written notice to the owner of any such lot, parcel of real estate or building, shall attach as such rates or charges become due and payable, and shall be superior to and take precedence over all other liens except the lien for taxes, and shall be enforced as hereinafter set out. Such rates or charges so established shall be paid within 30 days after same are due. If such rates or charges are not paid within said 30-day period after written notice to the owner of any such lot, parcel of real estate or building, the same shall thereupon become and hereby are declared to be delinquent and a penalty of 10 percent of

the amount of such rates or charges shall thereupon attach thereto, which rates or charges, together with the penalty, shall be collectible in the manner hereinafter provided.

(C) It shall be the duty of the clerk-treasurer of the town to enforce payment thereof, together with the penalty hereinabove provided. The clerk-treasurer shall certify to the county auditor a list of such rates or charges, including the amount of the penalty, which have become delinquent according to law. Such list shall include the name or names of the owner or owners of each and every lot, parcel of real estate or building on which such rates or charges have become delinquent, the description of such premises as shown by the records of the office of the county auditor, and the amount of such rates or charges, together with the amount of the penalty. It shall be the duty of the county auditor to place and include any such rates or charges, including the amount of the penalty, on the tax list, roll of taxes or tax duplicate, in the appropriate place thereon in respect to the premises on which any such rates or charges and penalty are due and payable, in such manner and pursuant to the terms of IC 36-9-25-11(g), 36-9-23-33 and 36-9-23-34.

(D) In addition to the methods of collection of such rates or charges, including the penalty thereon, when the same become delinquent as hereinabove provided, the sewage works shall have the right to foreclose the lien hereinbefore established. In all suits brought to foreclose such lien, the sewage works shall recover the amount of such rates or charges and the penalty thereon, together with a reasonable attorney's fee, pursuant to the terms of IC 36-9-25-11(g), 36-9-23-33 and 36-9-23-34. [Ord. 764, 1978; amended during 2012 recodification; Ord. 1628 § 5, 2016. Code 1983 § 17-20. Code 2000 § 171.05].

12.20.060 Special agreements.
No statement contained in this chapter shall be construed as preventing any special agreement or arrangement between the district and any industrial concern whereby an industrial waste of unusual strength or character may be accepted by the district for treatment, subject to payment therefor by the industrial concern. [Ord. 764, 1978. Code 1983 § 17-21. Code 2000 § 171.06].

12.20.070 Unauthorized breaking, tampering, and the like.
No unauthorized person shall maliciously, willfully or negligently break, damage, destroy, uncover, deface or tamper with any structure, appurtenance or equipment which is a part of the sewage works. [Ord. 764, 1978. Code 1983 § 17-22; Code 2000 § 171.07].

Penalty, see HMC 1.05.170.

12.20.080 Compliance with state and federal requirements.
All provisions of this chapter and limits set herein shall comply with any applicable state and/or federal requirements in effect. [Ord. 764, 1978; amended during 2012 recodification. Code 1983 § 17-23; Code 2000 § 171.08].

Penalty, see HMC 1.05.170.

12.20.090 Unlawful connections.
It shall be unlawful for anyone to make connection to a sewage works primary line or secondary line without first making application for connection and complying with the provisions of this chapter. Violators shall be subject to a penalty of $100.00 plus twice the base monthly sewage rate for the period involved. Anyone using the services of the sewage works and not paying for such services, or not reporting the use of such services shall be subject to a penalty of twice the assessment charge plus twice the minimum quarterly sewage rate for the period. [Ord. 764, 1978; amended during 2012 recodification. Code 1983 § 17-24; Code 2000 § 171.09].

12.20.100 Violations – Notice – Liability – Remedies.
(A) Any person found to be violating any provision of this article except HMC 12.20.070 shall be served by the district with written notice stating the nature of the violation and providing a reasonable time limit for the satisfactory correction thereof. The offender shall, within the period of time stated in such notice, permanently cease all violations.

(B) Any person who shall continue any violation beyond the time limit provided for in subsection (A) of this section shall be punished as provided in HMC 9.85.060.

(C) Any person violating any of the provisions of this article shall become liable to the district for any expense, loss, or damage occasioned the district or district users by reason of such violation.

(D) The board shall have full power to invoke any authorized legal, equitable or special remedy for the enforcement of this article. The board is hereby authorized to institute proceedings in the circuit or superior courts of the county for prohibitory or mandatory injunctive relief to prevent or discontinue any violations hereof. [Ord. 764, 1989. Code 1983 § 17-25; Code 2000 § 171.10].

Article II. Building Sewers and Connections

12.20.110 Connection permit.

(A) No unauthorized person shall uncover, make any connections with or opening into, use, alter or disturb any public sewer or appurtenance thereof without first obtaining a written permit from the superintendent.

(B) There shall be the following classes of building sewer tap permits:

(1) For single-family or two-family (duplex) residential service;

(2) For multifamily residential having three or more units' service;

(3) For commercial service or establishments;

(4) For industrial waste producing establishments; and

(5) For service in a duly designated economic development area.

(C) The owner or his/her agent shall make application on a special form provided by the sewage works. The permit applications shall be supplemented by any plan, specifications or other information considered pertinent in the judgment of the superintendent.

(D) The following sanitary (wastewater) and storm water sewer permit and tap fees are hereby in effect:

(1) Three hundred dollars per single-family residential unit or per unit of a two-unit (duplex) residential building;

(2) Five hundred dollars per multiple-family residential building having three or more units;

(3) Five hundred dollars per commercial tap to a sanitary sewer, in the case of a storm water sewer, $500.00 per commercial building;

(4) Seven hundred dollars per industrial tap to a sanitary sewer, in the case of a storm water sewer, $700.00 per industrial building; and

(5) Five hundred dollars per one-quarter acre for users in a duly designated economic development area. The rate will be applied to the nearest one-quarter acre.

(E) The board of sanitary commissioners may assess sanitary (wastewater) and storm water sewer permit and tap fees for users in a duly designated economic development area as follows:

(1) For a user's entire property area; or

(2) For the area of a user's property contained within an assessment district established pursuant to IC 36-9-39.1 et seq.;

(3) Permit and tap fees established pursuant to subsections (E)(1) and (2) of this section may be deferred by the board of sanitary commissioners by allowing said fees to be added to the amount of an assessment levied against a user's property pursuant to IC 36-9-39.1 et seq. [Ord. 1430 § 1, 2009; amended during 2012 recodification. Code 2000 § 171.20].

Penalty, see HMC 1.05.170.

12.20.120 Costs of, and liabilities from, connections.
All costs and expenses incident to the installation and connection of a building sewer shall be borne by the owner. The owner or the person installing the building sewer for said owner shall indemnify the district from any loss or damage that may directly or indirectly be occasioned by said installation. [Ord. 764, 1978. Code 1983 § 17-42; Code 2000 § 171.21].

12.20.130 Separate and independent building sewer required.
A separate and independent building sewer shall be provided for every building, except where two buildings are in close proximity and no private sewer is available or can be constructed to the second building through an adjoining alley, court, yard or driveway, the building sewer from the front building may be extended to the second building and the whole considered as one building sewer. A single sewer may serve an industrial complex under a single ownership. [Ord. 764, 1978. Code 1983 § 17-43; Code 2000 § 171.22].

Penalty, see HMC 1.05.170.

12.20.140 Use of old building sewers.
Old building sewers may be used in connection with new buildings only when they are found on examination and test by the superintendent to meet all requirements of this chapter. [Ord. 764, 1978. Code 1983 § 17-44; Code 2000 § 171.23].

12.20.150 Building sewer specifications.
(A) The building sewer shall be cast iron soil pipe, ASTM specification or equal, vitrified clay sewer pipe, ASTM specification or equal, or other suitable material as governed by the Indiana Uniform Plumbing Code in effect as of March 20, 1978, and any provisions thereof which may be amendatory thereof or supplemental thereto from time to time hereafter, and as shall be approved by the superintendent. Joints shall be tight and waterproof.

(B) Any part of the building sewer that is located within 10 feet of a water service pipe shall be constructed of cast iron soil pipe with leaded joints. Cast iron pipes with leaded joints may be required by the superintendent where the building sewer is exposed to damage by tree roots. If installed in filled or unstable ground, the building sewer shall be of cast iron soil pipe, except that nonmetallic material may be accepted if laid on a suitable concrete bed or cradle as approved by the superintendent. [Ord. 764, 1978. Code 1983 § 17-45; Code 2000 § 171.24].

Penalty, see HMC 1.05.170.

12.20.160 Building sewer size, slope, and location.
(A) The size and slope of the building sewers shall be subject to the approval of the superintendent, but in no event shall the diameter be less than four inches for single-family or duplex residential units and not less than six inches for all other uses. The slope of such four-inch pipe shall be not less than one-fourth inch per foot or sufficient slope to maintain a two feet per second velocity in the sewer.

(B) No building sewer shall be laid parallel to or within three feet of any bearing wall, which might thereby be weakened. The depth shall be sufficient to afford protection from frost.

The building sewer shall be laid at a uniform grade and in straight alignment insofar as possible.

Changes in direction shall be made only with properly curved pipes and fittings. [Ord. 764, 1978. Code 1983 § 17-46; Code 2000 § 171.25].

Penalty, see HMC 1.05.170.

12.20.170 Building sewer lifts – Ejectors, and the like.
In all buildings in which any building drain is too low to permit gravity flow to the public sewer, sanitary sewage carried by such drains shall be lifted by approved artificial means and discharged to the building sewer. No water operated sewage ejector shall be used. [Ord. 764, 1978. Code 1983 § 17-47; Code 2000 § 171.26].

Penalty, see HMC 1.05.170.

12.20.180 Joints.
(A) All joints and connections shall be made gas-tight and water-tight, and as governed by the Indiana Uniform Plumbing Code in effect as of March 20, 1978, and any provisions thereof which may be amendatory thereof or supplemental thereto from time to time.

(B) Cast iron joints shall be firmly packed with oakum or hemp and filled with molten lead, Federal Specification QQ-L-156, not less than one inch deep. Lead shall be run in one pouring and caulked tight. No paint, varnish or other coatings shall be permitted on the jointing material until after the joint has been tested and approved. Approved joints of prefabricated elastomeric seal rings or sleeves may also be used.

(C) All joints in vitrified clay pipe shall be made with ASTM C425 type joints. Joints between clay pipe and pipe of other materials shall be made with approved adapter fittings or prefabricated elastomeric sealing rings or sleeves.

(D) Other jointing materials and methods may be used by approval of the superintendent. [Ord. 764, 1978. Code 1983 § 17-48; Code 2000 § 171.27].

Penalty, see HMC 1.05.170.

12.20.190 Connections to public sewer.
(A) The connection of the building sewer into the public sewer shall be made at the "Y" branch, if such branch is available at a suitable location. If the public sewer does not have a properly located "Y" branch, the owner shall at his expense install an approved tapping saddle in the public sewer at the location specified by the superintendent. The tapping saddle shall be installed in a neatly tapped hole cut into the public sewer; said connection between the tapping saddle and public sewer shall be secured by the use of epoxy compound. The center line of the building sewer at the tapping saddle shall be at or above the center line of the public sewer. A smooth, neat joint shall be made, and the connection made secure and water-tight. Special fittings may be used for the connection only when approved by the superintendent.

(B) The applicant for the building sewer permit shall notify the superintendent 24 hours in advance of when the building sewer is ready for inspection and connection to the public sewer. The connection shall be made under the supervision of the superintendent or his representative. [Ord. 764, 1978. Code 1983 § 17-49; Code 2000 § 171.28].

Penalty, see HMC 1.05.170.

12.20.200 Excavations, backfilling, and the like.
(A) All excavations required for the installation of a building sewer shall be open trench work unless otherwise approved by the superintendent. Pipe laying and backfill shall be performed in accordance with ASTM specifications except that no backfill shall be placed until the work has been inspected by the superintendent or his representative.

(B) All excavations for building sewer installation shall be adequately guarded with barricades and lights so as to protect the public from hazard. Streets, sidewalks, parkways and other public property disturbed in the course of the work shall be restored in a manner satisfactory to the district. [Ord. 764, 1978. Code 1983 § 17-50. Code 2000 § 171.29].

Penalty, see HMC 1.05.170.

Article III. Discharge Regulations

12.20.210 Storm water, surface water, cooling water, and the like.
(A) No person shall discharge or cause to be discharged any storm water, surface water, ground water, roof runoff or subsurface drainage to any sanitary sewer.

(B) Storm water and all other unpolluted waters shall be discharged to such sewers as are specifically designated as storm sewers, or to a natural outlet approved by proper authorities.

(C) Roof runoff and roof downspouts shall discharge over land and shall not connect directly to a storm sewer; unless otherwise authorized by the board. However, this provision shall not apply to any existing connection otherwise prohibited by this subsection that was in place on or before February 14, 2011.

(D) Unpolluted water from air conditioners, cooling, condensing systems or swimming pools shall be discharged to a storm sewer, where it is available. Where a storm sewer is not available, discharge may be to a natural outlet approved by the district and by the state. Where a storm sewer or natural sewer is not available, such unpolluted water may be discharged into a sanitary sewer by obtaining a written approval by the board.

(E) Industrial cooling water, which may be polluted with insoluble oils or grease or suspended solids, shall be pretreated for removal of pollutants and the resultant clear water and shall be discharged in accordance with subsection (D) of this section. [Ord. 1487 § 1, 2011. Code 1983 § 17-61; Code 2000 § 171.40].

Penalty, see HMC 1.05.170.

12.20.220 Certain harmful wastes totally prohibited.
No person shall discharge or cause to be discharged any of the following described waters or wastes to any public sewers:

(A) Any gasoline, benzene, naphtha, fuel oil, or other flammable or explosive liquid, solid or gas;

(B) Any waters or wastes containing toxic or poisonous solids, liquids, or gases in sufficient quantity, either singly or by interaction with other wastes, to injure or interfere with any sewage treatment process, constitute a hazard to humans or animals, create a public nuisance, or create any hazard in the receiving waters of the sewage treatment plant;

(C) Any waters or wastes having a pH lower than 4.5 or having corrosive properties capable of causing damage or hazard to structures, equipment, and personnel of the sewage works;

(D) Solid or viscous substances in quantities or of such size capable of causing obstruction to the flow in sewers, or other interference with the proper operation of the sewage works such as, but not limited to, ashes, cinders, sand, mud, straw, shavings, metal, glass, rags, feathers, tar, plastics, wood, unground garbage, whole blood, paunch manure, hair and fleshings, entrails and paper dishes, cups, milk containers, and the like, either whole or ground by garbage grinders. [Ord. 764, 1978. Code 1983 § 17-62; Code 2000 § 171.41].

Penalty, see HMC 1.05.170.

12.20.230 Discharges superintendent may regulate or prohibit.
(A) The admission into the public sewers of any waters or wastes having:

(1) A five-day biochemical oxygen demand greater than 220 milligrams per liter by weight; or

(2) Containing more than 260 milligrams per liter by weight of suspended solids; or

(3) Containing any quantity of substances having the characteristics described in subsection (C) of this section; or

(4) An average daily flow greater than five percent of the average daily sewage flow of the district;

shall be subject to the review and approval of the superintendent.

(B)(1) Where necessary in the opinion of the superintendent, the owner shall provide at his expense such preliminary treatment as may be necessary to:

(a) Reduce the biochemical oxygen demand to 220 milligrams per liter and the suspended solids to 260 milligrams per liter by weight; or

(b) Reduce objectionable characteristics or constituents to within the maximum limits provided in subsection (C) of this section; or

(c) Control the quantities and rates of discharge of such waters or wastes.

(2) Plans, specifications and any other pertinent information relating to proposed preliminary treatment facilities shall be submitted for the approval of the superintendent and of the Stream Pollution Control Board of the state, and no construction of such facilities shall be commenced until said approval is obtained in writing.

(C) No person shall discharge or cause to be discharged the following described substances, materials, waters or wastes except if it appears likely in the opinion of the superintendent that such wastes will not harm either the sewers, sewage treatment process or equipment, nor have an adverse effect on the receiving stream, nor can otherwise endanger life, limb, or public property nor constitute a nuisance. In forming his opinion as to the acceptability of these wastes, the superintendent will give consideration to such factors as the quantities of subject wastes in relation to flows and velocities in the sewers, materials of construction of the sewers, nature of the sewage treatment process, capacity of the sewage treatment plant, degree of treatability of wastes in the sewage treatment plant and other pertinent factors. Included, but not limited to, the substances not acceptable are the following:

(1) Any liquid or vapor having a temperature higher than 150 degrees Fahrenheit, 65 degrees centigrade.

(2) Any garbage that has not been properly shredded. The installation and operation of any garbage grinder (other than in a residence) may be subject to the review and approval of the superintendent.

(3) Any waters or wastes containing strong acid iron pickling wastes, or concentrated plating solutions whether neutralized or not.

(4) Any waters or wastes exceeding the following maximum allowable limits: 2.0 mg/l of boron, 10.0 mg/l of chromium (hexavalent), 25.0 mg/l of chromium (trivalent), 5.0 mg/l of copper, 10.0 mg/l of cyanide, 50 mg/l of iron fez, 0.5 mg/l of lead, 10.0 mg/l of nickel, 100 mg/l of oil and grease, and the like (hexane solubles), temperature not over 150 degrees Fahrenheit (65 degrees centigrade), free acids and alkalis pH between 4.5 and 9.5, 10.0 mg/l of zinc, 2.0 mg/l of cadmium, and 30.0 mg/l of chlorine demand.

(5) Any waters or wastes containing phenols or other taste- or odor-producing substances after treatment of the composite sewage, in such concentrations exceeding limits which may be established by the superintendent as necessary to meet the requirements of the state, federal or other public agencies of jurisdiction for such discharge to the respective waters.

(6) Any radioactive wastes or isotopes of such half-life or concentration as may exceed limits established by the superintendent in compliance with applicable state or federal regulations.

(7) Any waters or wastes having a pH in excess of 9.5.

(8) Materials which exert or cause:

(a) Unusual concentration of inert, suspended solids (such as, but not limited to, fuller's earth, lime slurries and lime residues) or of dissolved solids (such as, but not limited to, sodium chloride and sodium sulfate).

(b) Excessive discoloration (such as, but not limited to, dye wastes and vegetable tanning solutions).

(c) Unusual BOD, chemical oxygen demand, or chlorine requirements in such quantities as to constitute a significant load on the sewage treatment plant.

(d) Unusual volume of flow or concentration of wastes constituting "slugs" as defined herein.

(9) Waters or wastes containing substances which are not amenable to treatment or reduction by the sewage treatment processes employed, or are amenable to treatment only to such degree that the sewage treatment plant effluent cannot meet the requirements of other agencies having jurisdiction over discharge to the receiving waters.

(D) All measurements, tests and analyses of the characteristics of waters and wastes to which reference is made in this section shall be determined in accordance with Standard Methods.

(E) If any waters or wastes are discharged, or are proposed to be discharged, to the public sewers, which waters contain the substances or possess the characteristics enumerated in subsection (C) of this section, and which in the judgment of the superintendent may have a deleterious effect upon the sewage works, processes, equipment or receiving waters, or which otherwise create a hazard to life or constitute a public nuisance, the superintendent shall:

(1) Require new industries or industries with significant increase in discharges to submit information on wastewater characteristics and obtain prior approval for discharges;

(2) Require other methods of disposal; and/or

(3) Require pretreatment to an acceptable condition for discharge to the public sewers; and/or

(4) Require control over the quantities and rates of discharge; and/or

(5) Require facilities to prevent accidental discharge of any unacceptable wastes; and

(6) Require payment to cover the added cost of handling and treating the wastes not covered by sewer charges under the provisions of this chapter and all ordinances amendatory thereof and supplemental thereto, and any fines, penalties or damages assessed against the district for discharge of such wastes. [Ord. 764, 1978. Code 1983 § 17-63. Code 2000 § 171.42].

12.20.240 Pretreatment facilities.
(A) If the superintendent permits the pretreatment or equalization of waste flows, the design and installation of the plans and equipment shall be subject to the review and approval of the superintendent and subject to the requirements of all applicable codes, ordinances and laws.

(B) Where preliminary treatment facilities are provided for any waters or wastes, they shall be maintained continuously in satisfactory and effective operation by the owner at his expense.

(C) Plans, specifications, and any other pertinent information relating to pretreatment or control facilities shall be submitted for approval of the district and the state, and no construction of such facilities shall be commenced until approval in writing is granted. Where such facilities are provided, they shall be maintained continuously in satisfactory and effective operating order by the owner at his expense and shall be subject to periodic inspection by the district to determine that such facilities are being operated in conformance with applicable federal, state and local laws and permits. The owner shall maintain operating records and shall submit to the district a monthly summary report of the character of the influent and effluent to show the performance of the treatment facilities and for comparison against district monitoring records.

(D) Pretreatment of industrial wastes from major contributing industries prior to discharge to the treatment works is required and is subject to the rules and regulations adopted by the United States Environmental Protection Agency (U.S. EPA) and published in the Federal Register on November 8, 1973 (40 CFR 128), and "Federal Guidelines Establishing Test Procedures for Analysis of Pollutants," published in the Federal Register on October 16, 1973 (40 CFR 136), in addition to any more stringent requirements established by the district, and any subsequent state or federal guidelines and rules and regulations. [Ord. 764, 1978. Code 1983 § 17-64. Code 2000 § 171.43].

Penalty, see HMC 1.05.170.

12.20.250 Inspection, and the like, of nonresidential discharges.
(A) Any industrial wastes discharged into the public sewers shall be subject to periodic inspection and determination of volume, character and concentration. The examination shall be made as often as the superintendent deems it necessary and may include the use of suitable continuously monitoring instruments in appropriate cases. Samples shall be collected either manually or by approved mechanical devices and in such a manner as to be representative of the overall composition of the wastes. Every care shall be exercised in collecting the samples to ensure their preservation, until analyzed, in a state comparable to that at the time the samples were collected.

(B) The district may require users of the treatment works, other than residential users, to supply pertinent information on wastewater flows characteristics. Such measurements, test, and analysis shall be made at the user's expense. If made by the district, an appropriate charge may be assessed to the user at the option of the district. [Ord. 764, 1978. Code 1983 § 17-65. Code 2000 § 171.44].

12.20.260 Flow measuring and sampling facilities – Control manhole.
(A) The installation, operation and maintenance of the flow measuring and sampling facilities shall be the responsibility of the person discharging the wastes and shall be subject to the approval of the superintendent. When required by the superintendent, the owner of any property served by a building sewer carrying industrial wastes shall install a suitable control manhole in the building sewer to facilitate observation sampling and measurement of the wastes.

(B) Such manhole, when required, shall be accessible and safely located, and shall be constructed in accordance with plans approved by the superintendent. The manhole shall be installed by the owner at his expense and shall be maintained by him so as to be safe and accessible at all times. [Ord. 764, 1978. Code 1983 § 17-66; Code 2000 § 171.45].

Penalty, see HMC 1.05.170.

12.20.270 Interceptors.
(A) Fat, grease, oil and sand interceptors shall be provided when, in the opinion of the superintendent, they are necessary for the proper handling of liquid wastes containing grease in excessive amounts, or any flammable wastes, sand and other harmful ingredients. All interceptors shall be of a type and capacity approved by the superintendent, and shall be located so as to be readily and easily accessible for cleaning and inspection. Approval of any such interceptors by the superintendent shall not relieve any person of the responsibility of complying with the discharge requirements of this article.

(B) Fat, grease, oil and sand interceptors shall be constructed of impervious materials capable of withstanding abrupt and extreme changes in temperature. They shall be of substantial construction, water-tight and equipped with easily removable covers which when bolted in place shall be gas-tight and water-tight.

(C) Where installed, all fat, grease, oil and sand interceptors shall be maintained by the owner, at his expense, in continuously efficient operation at all times. [Ord. 764, 1978. Code 1983 § 17-67; Code 2000 § 171.46].

Penalty, see HMC 1.05.170.

12.20.280 Inspection of discharges to review rates.
The strength of wastewaters shall be determined for periodic establishment of charges provided for in this chapter from samples taken at the control manhole at any period of time and of such duration and in such manner as the district may elect, or at any place mutually agreed upon between the user and the district. Appropriate charges for sampling and analysis may be assessed to the user at the option of the district. The results of routine sampling and analysis by the user may also be used for determination of charges after verification by the district. [Ord. 764, 1978. Code 1983 § 17-68; Code 2000 § 171.47].

12.20.290 Notice to district of spills, unusual flows, and the like.
Users of the sewage system shall immediately notify the district of any unusual flows or wastes that are discharged accidentally or otherwise to the sewer system. [Ord. 764, 1978. Code 1983 § 17-69; Code 2000 § 171.48].

Penalty, see HMC 1.05.170.

Article IV. User Rates and Charges

12.20.300 Definitions.
For the purpose of this article, the following definitions shall apply unless the context clearly indicates or requires a different meaning:

"Board" means the board of sanitary commissioners of the town, or any duly authorized officials acting in its behalf.

"BOD" or "biochemical oxygen demand" shall have the meaning ascribed to it in this chapter.

"Commercial user" means any establishment involved in a commercial enterprise, business or service which, based on a determination by the town, discharges primarily segregated domestic wastes or wastes from sanitary conveniences.

"Debt service costs" means the average annual principal and interest payments on all outstanding revenue bonds or other long-term capital debt.

"District" means the sanitary district of Highland, Indiana, or any duly authorized officials acting in its behalf.

"Excessive strength surcharges" means an additional charge which is billed to users for treating sewage wastes with an average strength in excess of normal domestic sewage.

"Government user" means any federal, state or local government user of the wastewater sewage works.

"Industrial user" means any manufacturing or processing facility that discharges industrial waste to a publicly owned sewage system.

"Industrial wastes" means the wastewater discharges from industrial, trade or business processes as distinct from employee wastes or wastes from sanitary conveniences.

"Institutional user" means any establishment listed in the Office of Management and Budget's Standard Industrial Classification Manual (1972 Edition) involved in a social, charitable, religious, and/or educational function which, based on a determination by the town, discharges primarily segregated domestic wastes or wastes from sanitary conveniences.

"Normal domestic sewage" means wastewater or sewage having an average daily concentration as follows: BOD not more than 220 mg/l; SS not more than 260 mg/l. As defined by origin, wastewaters from segregated domestic and/or sanitary conveniences as distinct from wastes from industrial processes.

"NPDES permit" shall have the meaning assigned to it in this chapter.

"Operation and maintenance costs" include all costs, direct and indirect, necessary to provide adequate wastewater collection, transport and treatment on a continuing basis and produce discharges to receiving waters that conform with all related federal, state, and local requirements (these costs include replacement).

"Other service charges" means tap charges, connection charges, area charges, and other identifiable charges, other than user charges, debt service charges and excessive strength surcharges.

"Person" means any and all persons, natural or artificial, including any individual, firm, company, municipal or private corporation, association, society, institution, enterprise, governmental agency or other entity.

"Replacement costs" means the expenditures for obtaining and installing equipment, accessories or appurtenances which are necessary during the service life of the sewage works to maintain the capacity and performance for which such works were designed and constructed.

"Residential user" means a user of the sewage works whose premises or building is used primarily as a residence for one or more persons, including all dwelling units, and the like.

"Sewage use ordinance" means the ordinance now or hereafter codified in this chapter.

"Sewer industrial cost recovery ordinance" means a separate and companion enactment to this article, which provides for recovery from industrial users of the sewage works of a portion of the federal grant amount allocable to the construction of sewage facilities for transporting industrial waste pursuant to Section 204(b) of PL 92-500 and 40 CFR 35.928(1) and (2).

"Suspended solids" or "SS" shall have the meaning assigned to it in this chapter.

"Town" means the town of Highland, Indiana, acting by and through the board of sanitary commissioners.

"User charge" means a charge levied on users of the wastewater sewage works for the cost of operation and maintenance of such works pursuant to Section 204(b) of Public Law 92-500.

"User class" means the division of wastewater sewage customers by source, function, waste characteristics, and process or discharge similarities (i.e., residential, commercial, industrial, institutional and governmental in the user charge system and as industrial and nonindustrial in the industrial cost recovery system). [Ord. 765, 1978; amended during 2012 recodification. Code 1983 § 17-81; Code 2000 § 171.60].

12.20.310 General basis, classification, and the like.
(A) Every person whose premises are served by the sewage works shall be charged for the services provided. These charges are established for each user class, as defined, in order that the sewage works shall recover, from each user and user class, revenue which is proportional to its use of the sewage works in terms of volume. User charges are levied to defray the cost of operation and maintenance (including replacement) of the sewage works. User charges shall be uniform in magnitude within a user class.

(B) User charges are subject to the rules and regulations adopted by the United States Environmental Protection Agency, published in the Federal Register, August 21, 1973 (38 CFR 22523), and on February 11, 1974 (39 CFR 5252). Replacement costs, which are recovered through the system of user charges, shall be based upon the expected service life of the sewage system structure equipment.

(C) The various classes of users of the sewage works, for the purposes of this article, shall be as follows: Class I.

(1) Residential;

(2) Commercial;

(3) Governmental;

(4) Institutional;

(5) Wholesale residential;

(6) Industrial. [Ord. 765, 1978. Code 1983 § 17-82; Code 2000 § 171.61].

12.20.320 Rates and charges established – Payment required.
(A) For users of the sewage works who are also metered users of the municipal water works, the basis for user fees will be comprised of a combined disposal, collection and treatment rate which will be based upon metered usage and a second component which will be a flat fee or base rate to be based upon the size of water meter servicing the user, all pursuant to IC 36-9-25-12. Water meters shall be read and sewage service bills shall be rendered pursuant to the billing and reading frequencies and practices of the municipal water works utility, pursuant to the Waterworks Rules and Regulations.

(1) The base charge shall be based on a water meter size of not more than one size smaller than the service line in which the meter is installed.

(2) For the service rendered to the town of Highland, the town shall be subject to the same rates and charges as herein provided.

(B) For users of the sewage works that either indirectly or directly use water from a source other than that of the municipal water works or that is measured from a water meter that is not acceptable to the board of sanitary commissioners, the board may require the person at the person's own expense to furnish, install, and maintain a water or sewage measuring device acceptable to the board, pursuant to IC 36-9-25-12(d).

(C) For the purposes of this chapter, sewage works shall be construed and have the meanings according to the definitions set forth in IC 36-9 et seq. and will include but not necessarily be limited to services or activities related to the following:

(1) Sewage treatment plants;

(2) Intercepting sewers;

(3) Main sewers;

(4) Submain sewers;

(5) Local sewers;

(6) Lateral sewers;

(7) Outfall sewers;

(8) Storm sewers;

(9) Force mains;

(10) Pumping stations;

(11) Ejector stations; and

(12) Any other structures necessary or useful for the collection, treatment, purification, and sanitary disposal of the liquid waste, solid waste, sewage, storm drainage, and other drainage of the municipality. [Ord. 1622 § 1, 2016].

12.20.330 Adequacy and purposes of rates, charges and fees.
The fees set forth in this enactment together with the taxes levied under IC 36-9-25 et seq. must at all times be sufficient to produce revenues sufficient to pay operation, maintenance, and administrative expenses of the sanitary district and sewage works, to pay the principal and interest on bonds of the sanitary district and sewage works as they become due and payable, and to provide money for the revolving fund authorized. [Ord. 1090.765-G, 1998. Code 2000 § 171.63].

12.20.340 Special adjustments.
(A) Adjustments for Lawn Sprinkling or Other Situations Where the Town's Water Meter Inaccurately Reflects Sewage Created.

(1) The quantity of water discharged into the sanitary sewerage system and obtained from sources other than the utility that serves the town shall be determined by the district in such manner as the district shall reasonably elect, and the sewage service shall be billed at the above appropriate rates. Further, as hereinafter provided in this section, the district may make proper allowances in determining the sewage bill for quantities of water shown on the records to have been consumed, but which are also shown to the satisfaction of the district that such quantities do not enter the sanitary sewage system.

(2) In the event a lot, parcel of real estate or building discharging sanitary sewage, industrial wastes, water or other liquids into the district's sanitary sewerage system, either directly or indirectly, is not a user of water supplied by the water utility serving the town, and the water used thereon or therein is not measured by a water meter, or is measured by a water meter not acceptable to the district, then the amount of water used shall be otherwise measured or determined by the district. In order to ascertain the rate or charge provided in this article, the owner or other interested party shall, at his expense, install and maintain meters, weirs, volumetric measuring devices or any adequate and approved method of measurement acceptable to the district for the determination of sewage discharge.

(3) In the event a lot, parcel of real estate or building discharging sanitary sewage, industrial wastes, water or other liquids into the district's sanitary sewerage system, either directly or indirectly, is a user of water supplied by the water utility serving the town and, in addition, is a user of water from another source which is not measured by a water meter or is measured by a meter not acceptable to the district, then the amount of water used shall be otherwise measured or determined by the district. In order to ascertain the rates or charges, the

owner or other interested parties shall, at his expense, install and maintain meters, weirs, volumetric measuring devices or any adequate and approved method of measurement acceptable to the district for the determination of sewage discharge.

(4) In the event a lot, parcel of real estate or building discharges sanitary sewage, industrial waste, water or other liquids into the district's sanitary sewerage system, either directly or indirectly, and uses water in excess of 25,000 gallons per month, and it can be shown to the satisfaction of the district that a portion of water as measured by the water meter or meters does not and cannot enter the sanitary sewage system, then the owner or other interested party shall install and maintain meters, weirs, volumetric measuring devices or any adequate and approved method of measurement acceptable to the district for the determination of sewage discharge.

(B) Summer Consumption Protocol. In order that single-family residential users of wastewater service shall not be unduly charged for sprinkling their lawns and other summer activities where higher consumption does not have a nexus to cost recovery and wastewater treatment, the following calculation related to consumption shall apply to said single-family residential users:

(1) The sewer charges for May and June shall be calculated on the basis of water usage in the months of November and December, respectively. The sewer charges for July and August shall be calculated on the basis of water usage in the months of January and February, respectively.

(2) In the event that the total actual water usage for said months of May, June, July, August and September in subsection (B)(1) of this section is less than the total actual water usage for said months of November, December, January, February and March, then the charges for the months of May, June, July, August, September shall be calculated on the basis of the total actual water used in these months.

(3) The aforementioned consumption protocol will be executed and in effect immediately following the meter readings conducted in May. Notwithstanding the preceding, the summer consumption protocol will be observed on the bills mailed in June, July, August, September and October, where it will conclude.

(4) The aforementioned provisions shall apply to each lot, parcel of real estate or building which is occupied and used as a single-family residence. Said provisions shall not apply to any premises which are partially or wholly used for multifamily, commercial or industrial purposes. In the event a portion of such premises shall be used for single-family residence, the owner shall have the privilege of separating the water service so that the residential portion of the premises is served through a separate meter and in such case the provisions hereunder shall be applicable to that portion of the premises used for residential purposes.

(C) Special Adjustments for Industrial Users.

(1) In order that the rates and charges may be justly and equitably adjusted to the service rendered to industrial users, the district shall base its charges not only on the volume, but also on strength and character of the stronger-than-normal domestic sewage and wastes which it is required to treat and dispose of. The district shall require the industrial user to determine the strength and content of all sewage and wastes discharged, either directly or indirectly into the sanitary sewage system, in such manner and by such method as the district may deem practicable in the light of the conditions and attending circumstances of the case, in order to determine the proper charge. The industrial user shall furnish a central sampling point available to the district at all times.

(2) Normal sewage domestic waste strength should not exceed a carbonaceous biochemical oxygen demand of 220 milligrams per liter of fluid or total suspended in excess of 260 milligrams per liter of fluid. Additional charges for treating stronger-than-normal domestic waste shall be made on the following basis:

(a) There shall be an additional charge of $1.822 per 100 pounds for total suspended solids received in excess of 260 milligrams per liter of fluid.

(b) There shall be an additional charge of $4.213 per 100 pounds of carbonaceous biochemical oxygen demand for CBOD received in excess of 220 milligrams per liter of fluid.

(3) The determination of suspended solids and five-day carbonaceous biochemical oxygen demand contained in the waste shall be in accordance with the latest copy of Standard Methods for the Examination of Water, Sewage and Industrial Wastes Method 5210.B, as written by the American Public Health Association, the American Water Works Association, the Water Environmental Association, and in conformance with Guidelines Establishing Test Procedures for Analysis of Pollutants, Regulation 40 CFR 136, published in the Federal Register on October 16, 1973, revised July 1, 2011. [Ord. 765, 1978; Ord. 1622 § 2, 2016. Code 1983 §§ 17-84 and 17-85; Code 2000 § 171.64].

12.20.350 Wastewater rates and charges – Collection and billing.

(A) For users of the sewage works who are also metered users of the municipal water works, the basis for user fees will be comprised of a combined disposal, collection and wastewater treatment rate which will be based upon metered usage and a second component which will be a flat fee or base rate to be based upon the size of water meter servicing the user, all pursuant to IC 36-9-25-12. The monthly base charge shall be based on a water meter size of not more than one size smaller than the service line in which the meter is installed. Water meters shall be read and sewage service bills shall be rendered pursuant to the billing and reading frequencies and practices of the municipal water works utility, pursuant to Chapter 12.05 HMC.

(B) Rates and charges for wastewater treatment and management services are hereby fixed and shall be comprised of the following metered rates and base charges to be effective beginning August 1, 2014:

(1) Monthly base rates:

Monthly Base Rate

Meter Size	Base Rate Total
5/8"	$4.81
3/4"	$6.38
1"	$10.81
1 1/4"	$16.82
1 1/2"	$23.88
2"	$40.64
3"	$92.26
4"	$163.91

(2) Add a metered rate: $2.80 per 1,000 metered gallons.

(3) An additional surcharge for each dwelling unit over one serviced through a single water meter shall be added to the above rates.

Monthly surcharge: $4.86 per unit

(4) For users of the sewage works that are unmetered users of the municipal water works, the monthly charge shall be determined by equivalent single-family residential units, except as otherwise herein provided. Sewage service bills shall be rendered pursuant to subsection (A) of this section. The schedule on which said rates shall be determined is as follows:

Unmetered monthly user charge: $26.57 per unit

(C) Rates and charges for wastewater treatment and management services are hereby fixed and shall be comprised of the following metered rates and base charges to be effective beginning July 1, 2015:

(1) Monthly base rates:

Monthly Base Rate

Meter Size	Base Rate Total
5/8"	$5.19
3/4"	$6.89
1"	$11.67
1 1/4"	$18.17
1 1/2"	$25.79
2"	$43.89
3"	$99.64
4"	$177.02

(2) Add a metered rate: $3.02 per 1,000 metered gallons.

(3) An additional surcharge for each dwelling unit over one serviced through a single water meter shall be added to the above rates.

Monthly surcharge:	$5.25 per unit

(4) For users of the sewage works that are unmetered users of the municipal water works, the monthly charge shall be determined by equivalent single-family residential units, except as otherwise herein provided. Sewage service bills shall be rendered pursuant to subsection (A) of this section. The schedule on which said rates shall be determined is as follows:

Unmetered monthly user charge:	$28.70 per unit

(D) Rates and charges for wastewater treatment and management services are hereby fixed and shall be comprised of the following metered rates and base charges to be effective beginning July 1, 2016:

(1) Monthly base rates:

Monthly Base Rate

Meter Size	Base Rate Total
5/8"	$5.61
3/4"	$7.44
1"	$12.60
1 1/4"	$19.62
1 1/2"	$27.85
2"	$47.40

Meter Size	Base Rate Total
3"	$107.61
4"	$191.18

(2) Add a metered rate: $3.26 per 1,000 metered gallons.

(3) An additional surcharge for each dwelling unit over one serviced through a single water meter shall be added to the above rates.

Monthly surcharge:	$5.67 per unit

(4) For users of the sewage works that are unmetered users of the municipal water works, the monthly charge shall be determined by equivalent single-family residential units, except as otherwise herein provided. Sewage service bills shall be rendered pursuant to subsection (A) of this section. The schedule on which said rates shall be determined is as follows:

Unmetered monthly user charge:	$31.00 per unit

[Ord. 1558 § 2, 2014].

12.20.360 Annual review.
In order that the rates and charges for sewage services may remain fair and equitable and be in proportion of the cost of providing services to the various users or user classes, the district shall cause an annual study to be made within a reasonable period of time following the normal accounting period. Such study shall include, but not be limited to, an analysis of the costs associated with the treatment of excessive strength effluents from industrial users or user classes, the financial position of the sewage works and the adequacy of its revenue to provide reasonable funds for operation, maintenance and replacements to the sewerage system. Said studies shall be conducted by officers or employees of the district or by a firm of certified public accountants, or a firm of consulting engineers, which firms shall have experience in such studies, or by such combination of officers, employees, certified public accountants, or engineers as the district shall determine to be the best under the circumstances. [Ord. 765, 1978. Code 1983 § 17-87; Code 2000 § 171.66].

12.20.370 District to make certain regulations.
The district shall make and enforce such bylaws and regulations as may be deemed necessary for the safe, economical and efficient management of the district's sewerage system and pumping stations, for the construction and use of house sewers and connections to the sewerage system, and for the regulation, collection, rebating and refunding of rates and charges. The district is hereby authorized to prohibit dumping of wastes into the district's sewage system which, in its discretion, are deemed harmful to the operation of the sewage works of said district, or to require methods affecting pretreatment of said wastes to comply with the pretreatment standards included in the NPDES permit issued to the sewage works. [Ord. 765, 1978. Code 1983 § 17-88; Code 2000 § 171.67].

12.20.380 Charges from Hammond sanitary district.
Sewage collected by the Highland sanitary district presently shall flow to the Hammond sanitary district for treatment. The Hammond sanitary district shall bill the Highland sanitary district for treatment of said district's sewage. The charge for transportation and treatment is not addressed in this section, but shall be based on negotiation between all parties concerned and in compliance with the Clean Water Act, as amended. [Ord. 765, 1978. Code 1983 § 17-89; Code 2000 § 171.68].

Article V. Sewer and Extension Fund

12.20.390 Establishment.
(A) A sewer and extension fund is hereby established in the department of public sanitation to be governed by the board of sanitary commissioners to be used by the board if it elects to construct, repair, extend, or improve a sewage works according to the provisions of IC 36-9-39.1 et seq.;

(B) If the board so elects to use this fund to construct, repair, extend, or improve a sewage works according to the provisions of IC 36-9-39.1 et seq., it may adopt a resolution providing that the construction, repair, extension, or improvement will be financed under the terms of IC 36-9-39.1 and this article. [Ord. 1332 § 1, 2006. Code 2000 § 171.80].

12.20.400 Fund resources.
(A) The fund consists of the following:

(1) A special assessment imposed and collected under IC 36-9-39.1-7. However, a special assessment imposed and collected under any other statute may not be deposited in the fund;

(2) An appropriation to the fund, which may include an appropriation made from taxes levied by a municipal legislative body for the construction, repair, extension, or improvement of a sewage works;

(3) From an appropriation in the sanitary district special operating fund, set aside and transferred to the fund;

(4) From an expenditure in the sewage works operating and maintenance fund, set aside and transferred to the fund;

(5) From a repayment out of the proceeds of the sale of bonds to the extent that the expenses paid are chargeable to the costs outlined in a bond resolution of the board adopted pursuant to IC 36-9-25-18;

(6) From money derived from state or federal reimbursement grants, if applicable;

(7) From assessments levied on benefiting property for such projects as have been or as hereinafter may be identified by the board of sanitary commissioners;

(B) Pursuant to IC 5-13-9 and 36-9-25-33, monies in the fund may be invested; provided, that the yields from the purchase and sale of any such investments be deposited with the fund. [Ord. 1332 § 1, 2006. Code 2000 § 171.81].

12.20.410 Appropriation of money for sewage works.
(A) The board may adopt a resolution to appropriate money from funds under the board's control to pay for all or part of the cost of the construction, repair, extension, or improvement of a sewage works, subject to IC 36-9-25-34 and 36-9-25-37, which also considers the funds appropriated already.

(B) Any costs not paid under subsection (A) of this section must be paid by:

(1) An assessment imposed under IC 36-9-39.1-7(c) against the benefited properties; or

(2) A contract under IC 36-9-22. Any interest or penalties attributable to an assessment under this section must be deposited in the fund.

(3) The board may adopt a resolution to impose an assessment to finance the construction, repair, extension, or improvement of a sewage works. The assessment must be imposed and collected as provided by the street and sewer improvement statutes. [Ord. 1332 § 1, 2006. Code 2000 § 171.82].

12.20.420 Contracts for sewage works.
(A) A contract for the construction, repair, extension, or improvement of a sewage works is subject to the statutes authorizing municipalities to make and finance public improvements.

(B) Upon awarding a contract for the construction, repair, extension, or improvement of a sewage works under this chapter, a board shall:

(1) Carefully compute the entire cost of the construction, repair, extension, or improvement, including payments to the contractor and all incidental costs, expenses, and damages paid and incurred according to law; and

(2) Prepare and make out an assessment roll listing the assessments against the properties benefited. In determining and fixing the amount of assessments, the giving of notice of assessments, the holding of public hearings, and the making of final determinations, subject to the right of appeal from those determinations, the board is governed by the street and sewer improvement statutes.

(C) An assessment under this article is a lien against the benefited property from the time of the letting of the contract and shall be collected in the manner provided for collection of Barrett Law assessments.

(D) The board shall fix a period of not more than 20 years within which the assessments shall be paid.

(E) A property owner liable for an assessment may execute a waiver in the manner provided by the street and sewer improvement statutes to pay the assessment in annual installments over a period fixed by the board.

(F) All payments under this article are deposited into the fund. [Ord. 1332 § 1, 2006. Code 2000 § 171.83].

Chapter 12.25

STORM WATER MANAGEMENT

Sections:

12.25.010 Definitions.
12.25.020 Application of storm water management services and charges.
12.25.030 Storm water management rates and charges.
12.25.040 Storm water management appeals of ERUs.
12.25.050 Storm water management billing and collection.
12.25.060 Sufficiency of fees and charges.
12.25.070 Compatibility of provisions.

12.25.010 Definitions.

For the purpose of this chapter, the following definitions shall apply unless the context clearly indicates or requires a different meaning. They shall be complementary to and not contradictory of the definitions set forth in this section.

"Board" means the board of sanitary commissioners of the sanitary district of Highland, Indiana, or any duly authorized officials acting in its behalf.

"Code" shall mean the Highland Municipal Code.

"Council" shall mean the town council of the town of Highland, or any duly authorized officials acting on its behalf.

"County regulated drain" shall mean part of the storm water conveyance system under the jurisdiction of the Lake County drainage board, including certain ditches, tiles and sewers.

"District" means the sanitary district of Highland, acting by and through the board of sanitary commissioners.

"Drain" shall mean any sewer, tile, ditch, stream or other storm water conveyance channel or conduit.

"Equivalent impervious area" shall mean the square foot sum of all land cover types multiplied by the corresponding runoff coefficient for each land cover type, as identified as follows:

Land Cover	Runoff Coefficient
Asphalt and concrete drives, walks and parking	0.90
Rooftops	0.90
Grass, lawns, parks, golf courses and cemeteries	0.20
Unimproved land, wood and agricultural	0.20
Gravel drives and parking	0.65
Ponds and lakes	0.05

"Equivalent residential unit (ERU)" shall mean a unit value equal to the average amount of equivalent impervious area of a residential property within the town of Highland and established at 5,000 square feet. It is also the basis for calculating the proper assessment of storm water charges to all users for the Highland storm water system.

"HSD" shall mean sanitary district of Highland.

"Impervious area" shall mean the total surface area (asphalt, concrete, stone, etc.) that is contained on a lot or parcel, or within a development tract. Hard surface area shall include, but not be limited to, driveways, parking areas, sidewalks or other paved areas, and all areas under roof.

"Infiltration" shall mean a complex process of allowing storm water runoff to penetrate the ground surface and flow through the upper soil surface.

"May" is permissive.

"Multifamily units," for the purposes of the storm water management function, shall mean a lot or parcel of land on which is situated a building containing two or more dwelling units or on which two or more buildings each containing multiple dwelling units are situated.

"Nonresidential property," for the purposes of the storm water management function, shall mean all properties not encompassed within the definition of residential property shall be defined as nonresidential property. Nonresidential property shall include, but not necessarily be limited to:

(A) Agricultural property;

(B) Commercial property;

(C) Industrial property;

(D) Institutional property;

(E) Governmental property;

(F) Churches;

(G) Schools;

(H) Federal, state and local government-owned property; and

(I) Any other property not mentioned herein and not specifically defined as either residential property or vacant residential property.

"Pervious area" shall mean real property that has a runoff coefficient of less than 0.90.

"Private storm water facilities" shall mean various storm water and drainage works not under the control or ownership of the town, county, state and/or federal government which may include inlets, conduits, pipes, pumping stations, manholes, structures, channels, outlets, retention or detention basins, other structural components and equipment designed to transport, move, hold or regulate storm water.

"Public storm water facilities" shall mean the various storm water and drainage works under the control and/or ownership of the town, county, state or federal government which may include inlets, conduits, pipes, pumping stations, manholes, structures, channels, outlets, retention or detention basins, other structural components and equipment designed to transport, move, hold or regulate storm water.

"Rate category," for the purposes of the storm water management function, shall mean the following equivalent square footage of hard and semi-impervious surfaces (buildings, structures, paved surfaces, etc.) and impervious area of a property times the water runoff coefficient factor for residential and nonresidential user classes as set forth in subsection (3)(a) of this section:

Unit	C x A Factor[1]	ERU
Residential		
Single-Family Unit		1.00

Unit	C x A Factor[1]	ERU
Multiple-Family Units		
	1 to 4 units (each)	0.75
	5 to 12 units (each)	0.55
	greater than 12 units (each)	0.35
Nonresidential		
Category 1	0 – 5,000 ft^2	1.00
Category 2	5,001 – 40,000 ft^2	4.00
Category 3	40,001 – 100,000 ft^2	12.00
Category 4	Over 100,000 ft^2	20.00

(1) Composite water runoff coefficient factor times area.

"Replacement costs," for the purposes of the storm water management function, shall mean the expenditures for obtaining and installing equipment, accessories or appurtenances which are necessary during the useful life of storm water collection facilities to maintain the capacity and performance for which such works were designed and constructed.

"Residential property," for the purposes of the storm water management function, shall mean real property consisting of a lot or parcel or contiguous lots or parcels of single ownership on which a building or buildings or a mobile home is situated, which structure(s) contains a group of rooms forming habitable dwelling unit or units with facilities that are used or are intended to be used primarily for living, sleeping, cooking and eating.

"Runoff coefficient," for the purposes of the storm water management function, shall mean the ratio of peak flow from a drainage area (in cubic feet per second) and the product of rainfall intensity (in inches per hour) over a given land area (in acres). A measure of how much storm water runoff is produced in response to the rainfall.

"Sewage works" shall have the same meaning as defined in IC 36-9-1-8.

"Shall" is mandatory.

"Storm sewer" shall mean a sewer designed or intended to convey only storm water, surface runoff, street wash waters and drainage, and not intended for sanitary sewage and industrial wastes other than unpolluted cooling water. The portion of a sewer intended to carry storm water or surface drainage only, which begins at the grating or opening where water enters said sewer, through the sewer or any other conduits to the outlet structure where water enters a channel, natural watercourse or combined sewer.

"Storm water" shall mean the chemical compound of hydrogen and oxygen, which is produced from atmospheric clouds as rain, snow, sleet and hail.

"Storm water system" shall mean all constructed facilities, structures and natural watercourses under the ownership, and/or control of the town and/or the HSD, used for collecting and conducting storm water to, through and from drainage areas to the point of final outlet, including, but not limited to, any and all of the following: inlets, conduits and appurtenant features, creeks, channels, catch basins, manholes, ditches, streams, culverts, retention or detention basins and pumping stations, and excluding therefrom any part of the system of drains and watercourses under the jurisdiction of the Lake County drainage board.

"Storm water utility customer/user" shall mean a person, firm, corporation, association, municipality or other political subdivision having an interest as owner in any property which is within the jurisdiction of the department of public sanitation and its sanitary district and receiving services related to storm water and/or watershed management, either temporarily or permanently, from the Highland department of public sanitation, its sanitary district.

"Storm water utility user fee" shall mean a charge imposed on users of the HSD's public storm water facilities and storm water system.

"Superintendent" shall mean the public works director or a designee acting as the administrative leader of the utility.

"User class," for the purposes of the storm water management function, shall mean the division of storm water properties between residential and nonresidential.

"Vacant property" shall mean a lot or parcel of real property on which there does not exist a building or structure. [Ord. 1246 § 1, 2004. Code 2000 § 171.70].

12.25.020 Application of storm water management services and charges.
(A) Every user shall be charged for the services provided. These charges are established for each user class, as defined, in order that the storm water utility shall recover, from each user and user class, revenue, which is proportional to its measurement of impervious area. These various classes of users of the storm water collection system for purposes of this chapter shall be as follows:

Class 1.	Residential
Class 2.	Nonresidential

(B) For purposes of the storm water management function, the definitions of these user classes shall be:

(1) Residential User Class. Shall include a lot or parcel improved with a structure used primarily for residential purposes, each of which discharge storm water, directly or indirectly, into the storm water system of the town.

(2) Nonresidential User Class. Shall include all other properties that do not meet the definition of "residential user class" and that discharge storm water, directly or indirectly, into the storm water system of the town. [Ord. 1250 § 1, 2004. Code 2000 § 171.71].

12.25.030 Storm water management rates and charges.
(A) For use of and the service rendered by said storm water utility, user fees shall be collected from users. The storm water management fees shall be charged according to the following schedule.

(B) For the periods identified below and thereafter, the following fees and charges are in effect:

Storm Water Management Fees Schedule

(1) For the period beginning August 1, 2014, the following fees and charges are in effect:

	Monthly Fees
Residential	
Single-Family Unit	$8.69
Multiple-Family Units	
1 to 4 units (each)	$6.51
5 to 12 units (each)	$4.77
Greater than 12 units (each)	$3.03
Nonresidential	
Category 1 (0 – 5,000 sq. ft.)	$8.69

	Monthly Fees
Category 2 (5,001 – 40,000 sq. ft.)	$34.87
Category 3 (40,001 – 100,000 sq. ft.)	$104.27
Category 4 (Over 100,000 sq. ft.)	$173.78

(2) For the period beginning July 1, 2015, the following fees and charges are in effect:

	Monthly Fees
Residential	
Single-Family Unit	$9.39
Multiple-Family Units	
1 to 4 units (each)	$7.03
5 to 12 units (each)	$5.15
Greater than 12 units (each)	$3.27
Nonresidential	
Category 1 (0 – 5,000 sq. ft.)	$9.39
Category 2 (5,001 – 40,000 sq. ft.)	$37.66
Category 3 (40,001 – 100,000 sq. ft.)	$112.61
Category 4 (Over 100,000 sq. ft.)	$187.68

(3) For the period beginning July 1, 2016, and continuing thereafter, the following fees and charges are in effect:

	Monthly Fees
Residential	
Single-Family Unit	$10.14
Multiple-Family Units	
1 to 4 units (each)	$7.59
5 to 12 units (each)	$5.56
Greater than 12 units (each)	$3.53
Nonresidential	
Category 1 (0 – 5,000 sq. ft.)	$10.14
Category 2 (5,001 – 40,000 sq. ft.)	$40.67
Category 3 (40,001 – 100,000 sq. ft.)	$121.62
Category 4 (Over 100,000 sq. ft.)	$202.69

(C) For the service rendered to the town of Highland, said town shall be subject to the same user fees hereinabove provided. Impervious area located within a public-dedicated or public-owned right-of-way shall not be subject to a user fee.

(D) Federal, State, Town, County and Private Roadways. Streets, roads, highways and bike paths shall be given 100 percent credit as they form an integral part of the storm water system. The surface water control system incorporated in design of roadways are areas engineered to convey all design runoff without street flooding. Primary elements of the drainage system yield community-wide benefits and are installed to service the general public's interests. [Ord. 1322 § 1, 2006; Ord. 1383 § 1, 2008; amended during 2012 recodification; Ord. 1558 § 1, 2014. Code 2000 § 171.72].

12.25.040 Storm water management appeals of ERUs.

(A) If a storm water utility customer/user determines that the ERU multiple assigned to said user's real property is incorrect for any reason, said storm water utility customer/user shall have the right to appeal the ERU determination and thus the rate assessed in the following manner:

(1) The storm water utility customer/user shall obtain and complete a petition to appeal storm water rate form ("petition"), which shall be returned to the town of Highland clerk-treasurer with verifiable documentation supporting the appeal.

(2) The superintendent shall investigate the appeal and, upon review thereof, shall render a written determination to the board and the storm water utility customer/user that either the original ERU determination and assessed rate should be affirmed or the storm water utility user fee should be adjusted in accordance with the petition.

(3) If a petition to appeal is denied, said determination shall be forwarded to the storm water utility customer/user by certified mail, return receipt requested. The storm water utility customer/user shall then have 30 days from the date of receipt of said determination to request a reconsideration by the board. Any additional facts concerning the appeal shall be submitted in writing to the HSD, along with a copy of the original petition and supporting documents, to the board. The superintendent shall submit a written report of the determination in the case, along with any documents used in denying the appeal.

(4) Thereafter, the board shall review all documentation and, if requested in writing by the storm water utility customer/user, conduct a hearing to determine and resolve the appeal. Such hearing will be scheduled by the HSD and the storm water utility customer/user will be notified by certified mail of the date of such hearing, which notice shall be received by the storm water utility customer/user at least seven days prior to the date of such hearing. A written opinion shall be rendered within 45 days after the hearing or submission of documentation if no hearing is conducted. The written opinion of the board shall constitute the final HSD determination. The hearing shall be electronically recorded and if requested by the storm water utility customer/user, a transcript of the hearing shall be provided to the storm water utility customer/user. The storm water utility customer/user will be charged at a cost per page as determined by the board, in accordance with applicable law as amended from time to time.

(B) A storm water utility customer/user aggrieved by the final board determination shall have the right to judicial review of such determination in accordance with applicable Indiana law.

(C) If the superintendent or town engineer recommends the storm water utility user fee be reduced, or reduction is ordered by the director, the board or any court of competent jurisdiction, the storm water utility customer/user shall be credited accordingly for any overpayment made from the date of petition.

(D) Dispute or appeal of an ERU determination or storm water service rate shall not be a valid reason for nonpayment of the originally assessed storm water utility user fee by the storm water utility customer/user. [Ord. 1246 § 1, 2004. Code 2000 § 171.73].

12.25.050 Storm water management billing and collection.
(A) The user fees for all users shall be prepared and billed monthly, along with the charges for other town utility services rendered to properties located within the town of Highland.

(B) The user fee shall be due on the payment date set out for the utility bill. It shall be a violation of this enactment to fail to pay a storm water service bill when due, which due date shall be the same as that for wastewater services.

(C) As is provided by statute, all rates and charges not paid when due are hereby declared to be delinquent and a penalty of 10 percent of the amount of the rates and charges shall thereupon attach thereto. The time at which such rates or charges shall be paid is hereby fixed at 30 days after the due date of the bill.

(D) Collection. In addition to the penalties and charges provided herein, delinquent user fees may be collected in a civil action along with other delinquent utility charges by the HSD and the HSD shall be permitted to collect its reasonable attorneys' fees and court costs. [Ord. 1246 § 1, 2004. Code 2000 § 171.74].

12.25.060 Sufficiency of fees and charges.
The fees set forth in this chapter, together with the taxes levied under IC 36-9-25 et seq., must at all times be sufficient to produce revenues sufficient to pay operation, maintenance, and administrative expenses of the sanitary district and sewage works, to pay the principal and interest on bonds of the sanitary district and sewage (storm water/wastewater) works as they become due and payable, and to provide money for the revolving fund authorized. [Ord. 1246 § 1, 2004. Code 2000 § 171.75].

12.25.070 Compatibility of provisions.
The provisions of this chapter shall be considered a companion to the rates and charges as well as the associated rules and regulations in effect for the waste water management function of the district. [Ord. 1246 § 1, 2004. Code 2000 § 171.76].

Chapter 12.30

WATERCOURSE REGULATION FOR POLLUTION AND ILLICIT DISCHARGES

Sections:

12.30.010 Purpose and intent.
12.30.020 Definitions.
12.30.030 Applicability.
12.30.040 Responsibility for administration.
12.30.050 Severability.
12.30.060 Ultimate responsibility.
12.30.070 Prohibition of illegal discharges and illicit connections.
12.30.080 Suspension of storm drain system access.
12.30.090 Industrial or construction activity discharges.
12.30.100 Monitoring of discharges and right of access to facilities.
12.30.110 Requirements to prevent, control, and reduce storm water pollutants through use of best management practices.
12.30.120 Watercourse protection.
12.30.130 Notification of spills.
12.30.140 Enforcement and notice.
12.30.150 Appeal notice of violation.
12.30.160 Enforcement measures after appeal.
12.30.170 Abatement of the violation – Violator's liability.
12.30.180 Legal and equitable relief.
12.30.190 Penalties and fines.
12.30.200 Remedies not exclusive.

12.30.010 Purpose and intent.

The purpose of this chapter is to provide for the health, safety, and general welfare of the citizens of the town of Highland, Indiana, through the regulation of non-storm water discharges to the storm drainage system to the maximum extent practicable as required by federal and state law. This chapter, in accordance with 327 327 15-13 (also called Rule 13), establishes methods for controlling the introduction of pollutants into the municipal separate storm sewer system (MS4) in order to comply with requirements of the National Pollutant Discharge Elimination System (NPDES) permit process. The objectives of this chapter are:

(A) To regulate the contribution of pollutants to the municipal separate storm sewer system (MS4) by storm water discharges by any user.

(B) To prohibit illicit connections and discharges to the municipal separate storm sewer system.

(C) To establish legal authority to carry out all inspection, surveillance and monitoring procedures necessary to ensure compliance with this chapter. [Ord. 1344 § 2, 2007. Code 2000 § 171.100].

12.30.020 Definitions.

For the purposes of this chapter, the following shall mean:

"Authorized enforcement agency" means the town of Highland and/or the sanitary district of the town of Highland, its employees, designees or agents.

"Best management practices (BMPs)" means schedules of activities, prohibitions of practices, general good housekeeping practices, pollution prevention and educational practices, maintenance procedures, and other management practices to prevent or reduce the discharge of pollutants directly or indirectly to storm water, receiving waters, or storm water conveyance systems. BMPs also include treatment practices, operating procedures, and practices to control site runoff, spillage or leaks, sludge or water disposal, or drainage from raw materials storage.

"Construction activity" means activities subject to NPDES construction permits. All construction projects of one acre or greater require an NPDES storm water phase II permit. Such activities include but are not limited to clearing and grubbing, grading, excavating, and demolition.

"Hazardous materials" means any material, including any substance, waste, or combination thereof, which because of its quantity, concentration, or physical, chemical, or infectious characteristics may cause, or significantly contribute to, a substantial present or potential hazard to human health, safety, property, or the environment when improperly treated, stored, transported, disposed of, or otherwise managed.

"Illegal discharge" means any direct or indirect non-storm water discharge to the storm drain system, except as exempted in the monitoring of discharges portion (HMC 12.30.100) of this chapter.

"Illicit connections" is defined as either of the following: any drain or conveyance, whether on the surface or subsurface, which allows an illegal discharge to enter the storm drain system including but not limited to any conveyances which allow any non-storm water discharge including sewage, process wastewater, and wash water to enter the storm drain system and any connections to the storm drain system from indoor drains and sinks, regardless of whether said drain or connection had been previously allowed, permitted, or approved by the town of Highland or any drain or conveyance connected from a commercial or industrial land use to the storm drain system which has not been documented in plans, maps, or equivalent records and approved by the town of Highland.

"Industrial activity" means activities subject to NPDES industrial permits as defined in 40 CFR 122.26 (b)(14).

"National Pollutant Discharge Elimination System (NPDES) storm water discharge permit" means a permit issued by EPA (or by a state under authority delegated pursuant to 33 USC 1342(b)) that authorizes the discharge of pollutants to waters of the United States, whether the permit is applicable on an individual, group, or general area-wide basis.

"Non-storm water discharge" means any discharge to the storm drain system that is not composed entirely of storm water.

"Person" means any individual, association, organization, partnership, firm, corporation or other entity recognized by law and acting as either the owner or as the owner's agent.

"Pollutant" means anything which causes or contributes to pollution. Pollutants may include, but are not limited to: paints, varnishes, and solvents; oil and other automotive fluids; nonhazardous liquid and solid wastes and yard wastes; refuse, rubbish, garbage, litter, or other discarded or abandoned objects, ordnances, and accumulations, so that same may cause or contribute to pollution; floatables; pesticides, herbicides, and fertilizers; hazardous substances and wastes; sewage, fecal coliform and pathogens; dissolved and particulate metals; animal wastes; wastes and residues that result from constructing a building or structure; and noxious or offensive matter of any kind.

"Premises" means any building, lot, parcel of land, or portion of land whether improved or unimproved including adjacent sidewalks and parking strips.

"Storm drain system" means publicly owned facilities by which storm water is collected and/or conveyed, including but not limited to any roads with drainage systems, municipal streets, gutters, curbs, inlets, piped storm drains, pumping facilities, retention and detention basins, natural and humanmade or altered drainage channels, reservoirs, and other drainage structures.

"Storm water" means any surface flow, runoff, and drainage consisting entirely of water from any form of natural precipitation, and resulting from such precipitation.

"Storm water pollution prevention plan" means a document which describes the best management practices and activities to be implemented by a person or business to identify sources of pollution or contamination at a site and the actions to eliminate or reduce pollutant discharges to storm water, storm water conveyance systems, and/or receiving waters to the maximum extent practicable.

"Wastewater" means any water or other liquid, other than uncontaminated storm water, discharged from a facility.

"Watercourse" means any natural or improved stream, river, creek, ditch, channel, canal, conduit, gutter, culvert, drain, gully, swale, or wash in which waters flow either continuously or intermittently. [Ord. 1344 § 2, 2007. Code 2000 § 171.101].

12.30.030 Applicability.
This chapter shall apply to all water entering the storm drain system generated on any developed and undeveloped lands unless explicitly exempted by the authorized enforcement agency. [Ord. 1344 § 2, 2007. Code 2000 § 171.102].

12.30.040 Responsibility for administration.
The director of public works, on behalf of the authorized enforcement agency, shall administer, implement, and enforce the provisions of this chapter. The director of public works may delegate any authority granted hereunder to persons or entities acting in the beneficial interest of or in the employ of the authorized enforcement agency. [Ord. 1344 § 2, 2007. Code 2000 § 171.103].

12.30.050 Severability.
The provisions of this chapter are hereby declared severable. If any provision, clause, sentence, or paragraph of this chapter or the application thereof to any person, establishment, or circumstances shall be held invalid, such invalidity shall not affect the other provisions or application of this chapter. [Ord. 1344 § 2, 2007. Code 2000 § 171.104].

12.30.060 Ultimate responsibility.
The standards set forth herein and promulgated pursuant to this chapter are minimum standards; therefore, this chapter does not intend nor imply that compliance by any person will ensure that there will be no contamination, pollution, nor unauthorized discharge of pollutants. [Ord. 1344 § 2, 2007. Code 2000 § 171.105].

12.30.070 Prohibition of illegal discharges and illicit connections.
(A) Prohibition of Illegal Discharges. No person shall commence, conduct or continue any illegal discharge to the storm drain system except as follows:

(1) Discharges listed in 327 327 15-13-14(d) and discharges specified in writing by the authorized enforcement agency as being necessary to protect public health and safety are hereby exempt from prohibition under this chapter.

(2) Dye testing is an allowable discharge, but requires a verbal notification to the authorized enforcement agency prior to the time of the test.

(3) The prohibition shall not apply to any non-storm water discharge permitted under an NPDES permit, waiver, or waste discharge order issued to the discharger and administered under the authority of the federal Environmental Protection Agency; provided, that the discharger is in full compliance with all requirements of the permit, waiver, or order and other applicable laws and regulations; and provided, that written approval has been granted for any discharge to the storm drain system.

(4) The exceptions listed above (subsections (A)(1) through (3) of this section) shall be deemed illegal discharges if (a) the director of public works determines the discharge or flow in question to be a significant source of a pollutant or pollutants to the waters of the United States or to the storm drain system; (b) written notice of such determination has been provided to the discharger; and (c) the discharge continues after the expiration of a reasonable time, as determined by the director of public works, to cease the discharge as provided in the notice.

(B) Prohibition of Illicit Connections. The construction, use, maintenance or continued existence of illicit connections to the storm drain system is prohibited. This prohibition expressly includes, without limitation, illicit connections made in the past, regardless of whether the connection was permissible under law or practices applicable or prevailing at the time of the connection.

(C) No person shall connect a line conveying sewage to the storm drain system, or allow such a connection to continue. [Ord. 1344 § 2, 2007. Code 2000 § 171.106].

12.30.080 Suspension of storm drain system access.

(A) Suspension Due to Illicit Discharges in Emergency Situations. The director of public works may, without prior notice, order a person to suspend discharge to the storm drain system when such suspension is necessary to stop an actual or threatened discharge, which presents or may present imminent and substantial danger to the environment, to the health or welfare of persons, or to the storm drain system or waters of the United States. If the violator fails to comply with a suspension order issued in an emergency, the authorized enforcement agency may take such steps as deemed necessary to prevent or minimize damage to the storm drain system or waters of the United States, or to minimize danger to persons.

(B) Suspension Due to the Detection of Illicit Discharge. Any person discharging to the storm drain system in violation of this chapter may have their access terminated if such termination would abate or reduce an illicit discharge. The authorized enforcement agency shall notify a violator of the proposed termination of its storm drain system access. The violator may petition the authorized enforcement agency for reconsideration and hearing.

(C) No person shall reinstate storm drain system access to premises terminated pursuant to this section, without the prior approval of the authorized enforcement agency. [Ord. 1344 § 2, 2007. Code 2000 § 171.107].

12.30.090 Industrial or construction activity discharges.

Any person subject to an industrial or construction activity NPDES storm water discharge permit shall comply with all provisions of such permit. Proof of compliance with said permit may be required in a form acceptable to the authorized enforcement agency prior to allowing discharges to the storm drain system. [Ord. 1344 § 2, 2007. Code 2000 § 171.108].

12.30.100 Monitoring of discharges and right of access to facilities.

(A) Applicability. This section applies to all facilities that have storm water discharges associated with industrial activity, including construction activity.

(B) The authorized enforcement agency shall be permitted to enter and inspect facilities subject to regulation under subsection (A) of this section as often as may be necessary to determine compliance with this chapter. Entry shall occur during reasonable business hours. Entry shall be with the consent of a rightful occupant of the premises, except where a public safety emergency justifies a warrantless entry. If entry is refused, a warrant may be procured to inspect the premises under the terms of IC 36-7-9-15. If a person operating a facility has security measures in place, which require proper identification and clearance before entry into its premises, the person operating the facility shall make the necessary arrangements to allow access to representatives of the authorized enforcement agency.

(C) Facility operators shall allow the authorized enforcement agency ready access to all parts of the premises for the purposes of inspection, sampling, examination and copying of records that must be kept under the conditions of an NPDES permit to discharge storm water, and the performance of any additional duties as defined by state and federal law.

(D) The authorized enforcement agency may set up on any permitted facility such devices as are necessary in the opinion of the authorized enforcement agency to conduct monitoring and/or sampling of the facility's storm water discharge.

(E) The authorized enforcement agency may require the person operating a facility to install monitoring equipment as necessary. The facility's sampling and monitoring equipment shall be maintained at all times in a safe and proper operating condition by the person operating the facility at its own expense. All devices used to measure storm water flow and quality shall be calibrated to ensure their accuracy.

(F) Any temporary or permanent obstruction to safe and easy access to the facility to be inspected and/or sampled shall be promptly removed by the person operating the facility at the written or oral request of the authorized enforcement agency and shall not be replaced. The costs of clearing such access shall be borne by the person operating the facility.

(G) A person operating a facility with an NPDES permit to discharge storm water associated with industrial activity shall not unreasonably delay or deny the authorized enforcement agency reasonable access to the permitted facility

for the purpose of conducting any activity authorized or required by this chapter. [Ord. 1344 § 2, 2007; amended during 2012 recodification. Code 2000 § 171.109].

12.30.110 Requirements to prevent, control, and reduce storm water pollutants through use of best management practices.

The authorized enforcement agency may adopt requirements identifying best management practices for any activity, operation, or facility, which may cause or contribute to pollution or contamination of storm water, the storm drain system, or waters of the U.S. The owner or operator of a commercial or industrial establishment shall provide, at its own expense, reasonable protection from accidental discharge of prohibited materials or other wastes into the storm drain system or any watercourse through the use of these BMPs. Further, the authorized enforcement agency may require any person responsible for premises, which are, or may be, the source of an illicit discharge, to implement at said person's expense, additional BMPs to prevent the further discharge of pollutants to the storm drain system. Compliance with all terms and conditions of a valid NPDES permit authorizing the discharge of storm water associated with industrial activity, to the extent practicable, shall be deemed compliance with the provisions of this section. The BMPs shall be part of a storm water pollution prevention plan (SWPPP) as necessary for compliance with requirements of the NPDES permit issued to the town of Highland. [Ord. 1344 § 2, 2007. Code 2000 § 171.110].

12.30.120 Watercourse protection.

Every person owning premises through which a watercourse passes shall keep and maintain that part of the watercourse within the premises free of trash, debris, excessive vegetation, and other obstacles that would pollute, contaminate, or significantly retard the flow of water through the watercourse. In addition, the owner of the premises shall maintain existing privately owned structures within or adjacent to a watercourse, so that such structures shall not become a hazard to the use, function, or physical integrity of the watercourse. [Ord. 1344 § 2, 2007. Code 2000 § 171.111].

12.30.130 Notification of spills.

Notwithstanding any other requirements prescribed by law, as soon as any person operating a facility acquires information regarding any known or suspected release of materials which result or may result in the illegal discharge of pollutants into the storm drain system, said person shall take all necessary steps to ensure the discovery, containment, and cleanup of such release. In the event of a release of hazardous materials, said person shall immediately notify emergency response agencies of the release. In the event of a release of nonhazardous materials, said person shall notify the authorized enforcement agency in person or in writing no later than the next business day. If the discharge of prohibited materials emanates from a commercial or industrial establishment, the owner or operator of such establishment shall also retain an on-site written record of the discharge and the actions taken to prevent its recurrence. Such records shall be retained for at least three years. [Ord. 1344 § 2, 2007. Code 2000 § 171.112].

12.30.140 Enforcement and notice.

(A) Whenever the authorized enforcement agency finds that a person has violated the provisions of this chapter, the authorized enforcement agency may order compliance by written notice of violation to the responsible person.

(B) The notice of violation may order without limitation:

(1) Performance of monitoring, analyses, and reporting;

(2) Elimination of illicit connections or discharges;

(3) Cessation of prohibited discharges, practices, or operations;

(4) Abatement or remediation of storm water pollution or contamination hazards and the restoration of any affected property;

(5) Payment of a fine which has been reasonably calculated to cover administrative and remediation costs; and

(6) Implementation of source control or treatment BMPs.

(C) A notice of violation shall set forth a reasonable opportunity of at least 10 days but not more than 60 days within which to complete such remediation or restoration.

(D) The notice of violation shall further advise that, should the violator fail to comply with the provisions contained therein, any ordered activity may be performed by the authorized enforcement agency and the expense thereof shall be charged to the violator.

(E) The expenses of the enforcement agency shall constitute a lien against the property. The lien attaches when notice of the lien is recorded in the office of the county recorder in which the property is located. The lien is superior to all other liens except liens for taxes, in an amount that does not exceed:

(1) Ten thousand dollars for real property that is unimproved or contains one or more occupied or unoccupied single- or double-family dwellings or the appurtenances or additions to those dwellings; or

(2) Twenty thousand dollars for all other real property not described in subsection (E)(1) of this section.

(F) The enforcement agency may issue a bill to the owner of the real property for the costs incurred by it in bringing the property into compliance with this chapter, including administrative costs and removal costs.

(G) A bill issued under this section is delinquent if the owner of the real property fails to pay the bill within 30 days after the date of the issuance of the bill.

(H) Whenever the enforcement agency determines it necessary, the officer charged with the collection of fees and penalties for the municipal corporation shall prepare a list of delinquent fees and penalties that are enforceable under this chapter, including:

(1) The name or names of the owner or owners of each lot of parcel of real property on which fees are delinquent;

(2) A description of the premises, as shown on the records of the county auditor; and

(3) The amount of the delinquent fees and the penalty; or an instrument for each lot or parcel of real property on which the fees are delinquent.

(I) The officer shall record a copy of each list or each instrument with the county recorder, who shall charge a fee for recording the list or instrument under the fee schedule established in IC 36-2-7-10.

(J) The amount of a lien shall be placed on the tax duplicate by the auditor. The total amount, including any accrued interest, shall be collected in the same manner as delinquent taxes are collected and shall be disbursed to the proper fund of the enforcement agency.

(K) A fee is not enforceable as a lien against a subsequent owner of property unless the lien for the fee was recorded with the county recorder before conveyance to the subsequent owner. If the property is conveyed before the lien is recorded, the enforcement agency shall notify the person who owned the property at the time the fee became payable. The notice must inform the person that payment, including penalty fees for delinquencies, is due not later than 15 days after the date of the notice. If payment is not received within 180 days after the date of the notice, the amount due may be considered a bad debt loss.

(L) The enforcement agency shall release:

(1) Liens filed with the county recorder after the recorded date of conveyance of the property; and

(2) Delinquent fees incurred by the seller;

upon receipt of a written demand from the purchaser or a representative of the title insurance company or the title insurance company's agent that issued a title insurance policy to the purchaser. The demand must state that the delinquent fees were not incurred by the purchaser as a user, lessee, or previous owner and that the purchaser has not been paid by the seller for the delinquent fees.

(M) The county auditor shall remove the fees, penalties, and service charges that were not recorded before a recorded conveyance to a subsequent owner upon receipt of a copy of the written demand under subsection (H) of this section. [Ord. 1344 § 2, 2007; Ord. 1628 § 6, 2016. Code 2000 § 171.113].

12.30.150 Appeal notice of violation.
Any person receiving a notice of violation may appeal the notice of violation, in writing, to the authorized enforcement agency. The written appeal must be received by the authorized enforcement agency within seven days from the date of the notice of violation. The authorized enforcement agency shall conduct a hearing within 15 days from the date of receipt of the written appeal at which time the authorized enforcement agency shall reconsider whether a violation exists. The decision of the authorized enforcement agency shall be final. [Ord. 1344 § 2, 2007. Code 2000 § 171.114].

12.30.160 Enforcement measures after appeal.
(A) The authorized enforcement agency may enter upon any premises and take any and all actions necessary to abate and/or remedy the violation under the following circumstances; provided, that entry shall occur during reasonable business hours. Entry shall be with the consent of a rightful occupant of the premises, except where a public safety emergency justifies a warrantless entry. If entry is refused, a warrant may be procured to inspect the premises under the terms of IC 36-7-9-15.

(1) The violator failed to remedy the violation pursuant to the notice of violation and no written appeal was received by the authorized enforcement agency in a timely manner;

(2) A written appeal was received by the authorized enforcement agency in a timely manner and the violator failed to remedy the violation within 30 days following hearing and a determination against the violator by the authorized enforcement agency;

(3) In an emergency which threatens the public health, safety and welfare.

(B) No person shall refuse to allow the authorized enforcement agency to enter upon the premises for the purposes set forth above. [Ord. 1344 § 2, 2007; amended during 2012 recodification. Code 2000 § 171.115].

12.30.170 Abatement of the violation – Violator's liability.
(A) A violator shall be liable to the authorized enforcement agency for any expense incurred for an action taken pursuant to this chapter. The authorized enforcement agency shall provide the violator with an itemized calculation of the expense of abatement within a reasonable time following abatement. Within 10 days following receipt of said notice, the property owner may file a written objection to the notice of expense. The authorized enforcement agency shall conduct a hearing within 15 days from the date of receipt of the objection. At the hearing, the authorized enforcement agency shall reconsider calculation of expense.

(B) Expenses determined hereunder shall be enforced and collected pursuant to the provisions of HMC 12.30.140 and IC 36-1-6. [Ord. 1628 § 7, 2016].

12.30.180 Legal and equitable relief.
The authorized enforcement agency shall have full power to invoke any authorized legal, equitable or special remedy for the enforcement of this chapter. The authorized enforcement agency is hereby authorized to institute proceedings in the circuit or superior courts of the county for prohibitory or mandatory injunctive relief to prevent or discontinue any violations hereof. [Ord. 1344 § 2, 2007. Code 2000 § 171.117].

12.30.190 Penalties and fines.
(A) Penalties and fines shall be assessed as follows:

(1) Any person who violates this chapter shall be subject to a fine not to exceed $100.00. Every day any violation of this chapter shall continue shall constitute a separate offense. The authorized enforcement agency may recover all attorneys' fees, court costs and other expenses associated with enforcement of this chapter;

(2) Any person who violates, disobeys, neglects or refuses to comply with or who resists enforcement of any of the provisions of this chapter shall, upon prosecution, be fined not more than $2,500 for each offense. Each day that a violation is permitted to exist shall constitute a separate offense.

(B) Any person, entity or organization who shall violate any provisions of HMC 12.15.010 through 12.15.150 shall be fined in the amount set forth in the designated schedule as a payable offense subject to admission before the violations clerk or ordinance violation bureau in the amount set forth in the admissions clerk payable offenses schedule in HMC 9.85.060.

(C) If such persons, entity or organization shall violate any provisions of HMC 12.15.010 through 12.15.150, and there is a failure to satisfy the civil violation as set forth in Chapter 9.85 HMC, then such violations shall be construed as justiciable offenses and shall be subject to a fine of not less than $25.00 per violation, nor more than $2,500. Each day of such unlawful activity as is prohibited shall be deemed a separate offense. [Ord. 1502 § 2, 2011. Code 2000 § 171.118].

12.30.200 Remedies not exclusive.
The remedies listed in this chapter are not exclusive of any other remedies available under any applicable federal, state or local law and it is within the discretion of the authorized enforcement agency to seek cumulative remedies. [Ord. 1344 § 2, 2007. Code 2000 § 171.119].

RESOLUTION NO. 2024 - 4
A PROPOSED RESOLUTION of the SANITARY DISTRICT of HIGHLAND, LAKE COUNTY, INDIANA

A RESOLUTION MODIFYING AND ESTABLISHING DISCHARGE REGULATIONS FOR SEWERS AND SEWAGE DISPOSAL, PURSUANT TO I.C. 36-9-25 ET SEQ.

WHEREAS, The Sanitary District of Highland is governed by its Board of Sanitary Commissioners, pursuant to the provisions of IC 36-9-25 et seq; and

WHEREAS, IC 36-9-25-9 specifically provides that the Board of Sanitary Commissioners shall manage and control all works of the district and may purchase, acquire, construct, reconstruct, operate, repair and maintain all sewage works; and

WHEREAS, The Board of Sanitary Commissioners in performing its duties, may adopt resolutions, rules and by-laws that are necessary to carry out the provisions of IC 36-9-25 including repealing and amending them consistent with the Sanitary District Law; and

WHEREAS, In order to properly maintain and operate all sewage works of the district, the Board has determined it to be necessary to modify **Chapter 12.20, Article III, Section 12.20.220 and Section 12.20.230** of the Highland Municipal Code relating to the discharge of certain wastes into the sewage works.

NOW, THEREFORE, BE IT RESOLVED by the Board of Sanitary Commissioners of the Sanitary District of the Town of Highland, Indiana, and the Department of Public Sanitation as follows:

Section 1. That **Chapter 12.20, Article III, Section 12.20.220 and Section 12.20.230** of the Highland Municipal Code are hereby repealed in their entirety and amended to add the following Sections to be numbered **Chapter 12.20, Section 12.20.220 and Section 12.20.230** which shall read as follows:

Chapter 12.20
SEWERS AND SEWAGE DISPOSAL

Article III. Discharge Regulations

12.20.220 Certain harmful wastes totally prohibited.

No person shall discharge or cause to be discharged any of the following described waters or wastes to any public sewers:

(A) Any gasoline, benzene, naphtha, fuel oil, or other flammable or explosive liquid, solid or gas;

(B) Any waters or wastes containing toxic or poisonous solids, liquids, or gases in sufficient quantity, either singly or by interaction with other wastes, to injure or interfere with any sewage treatment process, constitute a hazard to humans or animals, create a public nuisance, or create any hazard in the receiving waters of the sewage treatment plant;

(C) Any waters or wastes having a pH lower than 5.0, greater than 9.5, or having corrosive properties capable of causing damage or hazard to structures, equipment, and personnel of the sewage works;

(D) Solid or viscous substances in quantities or of such size capable of causing obstruction to the flow in sewers, or other interference with the proper operation of the sewage works such as, but not limited to, ashes, cinders, sand, mud, straw, shavings, metal, glass, rags, feathers, tar, plastics, wood, unground garbage, whole blood, paunch manure, hair and fleshings, entrails and paper dishes, cups, milk containers, and the like, either whole or ground by garbage grinders.

12.20.230 Discharges superintendent may regulate or prohibit.

(A) The admission into the public sewers of any waters or wastes having:

(1) A five-day biochemical oxygen demand greater than 220 milligrams per liter by weight; or

(2) Containing more than 260 milligrams per liter by weight of suspended solids; or

(3) Containing any quantity of substances having the characteristics described in subsection (C) of this section; or

(4) An average daily flow greater than five percent of the average daily sewage flow of the district;

shall be subject to the review and approval of the superintendent.

(B)(1) Where necessary in the opinion of the superintendent, the owner shall provide at his expense such preliminary treatment as may be necessary to:

(a) Reduce the biochemical oxygen demand to 220 milligrams per liter and the suspended solids to 260 milligrams per liter by weight; or

(b) Reduce objectionable characteristics or constituents to within the maximum limits provided in subsection (C) of this section; or

(c) Control the quantities and rates of discharge of such waters or wastes.

(2) Plans, specifications and any other pertinent information relating to proposed preliminary treatment facilities shall be submitted for the approval of the superintendent and of the Stream Pollution Control Board of the state, and no construction of such facilities shall be commenced until said approval is obtained in writing.

(C) No person shall discharge or cause to be discharged the following described substances, materials, waters or wastes except if it appears likely in the opinion of the superintendent that such wastes will not harm either the sewers, sewage treatment process or equipment, nor have an adverse effect on the receiving stream, nor can otherwise endanger life, limb, or public property nor constitute a nuisance. In forming his opinion as to the acceptability of these wastes, the superintendent will give consideration to such factors as the quantities of subject wastes in relation to flows and velocities in the sewers, materials of construction of the sewers, nature of the sewage treatment process, capacity of the sewage treatment plant, degree of treatability of wastes in the sewage treatment plant and other pertinent factors. Included, but not limited to, the substances not acceptable are the following:

(1) Any liquid or vapor having a temperature higher than 150 degrees Fahrenheit, 65 degrees centigrade.

(2) Any garbage that has not been properly shredded. The installation and operation of any garbage grinder (other than in a residence) may be subject to the review and approval of the superintendent.

(3) Any waters or wastes containing strong acid iron pickling wastes, or concentrated plating solutions whether neutralized or not.

(4) Any waters or wastes exceeding the following maximum allowable limits: 2.0 mg/l of boron, 10.0 mg/l of chromium (hexavalent), 25.0 mg/l of chromium (trivalent), 5.0 mg/l of copper, 10.0 mg/l of cyanide, 50 mg/l of iron fez, 0.5 mg/l of lead, 10.0 mg/l of nickel, 100 mg/l of oil and grease, and the like (hexane solubles), temperature not over 150 degrees Fahrenheit (65 degrees centigrade), free acids and alkalis pH between 5.0 and 9.5, 10.0 mg/l of zinc, 2.0 mg/l of cadmium, and 30.0 mg/l of chlorine demand.

(5) Any waters or wastes containing phenols or other taste- or odor-producing substances after treatment of the composite sewage, in such concentrations exceeding limits which may be established by the superintendent as necessary to meet the requirements of the state, federal or other public agencies of jurisdiction for such discharge to the respective waters.

(6) Any radioactive wastes or isotopes of such half-life or concentration as may exceed limits established by the superintendent in compliance with applicable state or federal regulations.

(7) Any waters or wastes having a pH less than 5.0 or in excess of 9.5.

(8) Materials which exert or cause:

(a) Unusual concentration of inert, suspended solids (such as, but not limited to, fuller's earth, lime slurries and lime residues) or of dissolved solids (such as, but not limited to, sodium chloride and sodium sulfate).

(b) Excessive discoloration (such as, but not limited to, dye wastes and vegetable tanning solutions).

(c) Unusual BOD, chemical oxygen demand, or chlorine requirements in such quantities as to constitute a significant load on the sewage treatment plant.

(d) Unusual volume of flow or concentration of wastes constituting "slugs" as defined herein.

(9) Waters or wastes containing substances which are not amenable to treatment or reduction by the sewage treatment processes employed, or are amenable to treatment only to such degree that the sewage treatment plant effluent cannot meet the requirements of other agencies having jurisdiction over discharge to the receiving waters.

(D) All measurements, tests and analyses of the characteristics of waters and wastes to which reference is made in this section shall be determined in accordance with Standard Methods.

(E) If any waters or wastes are discharged, or are proposed to be discharged, to the public sewers, which waters contain the substances or possess the characteristics enumerated in [illegible] deleterious effect upon the sewage works, processes, equipment or receiving waters, or which otherwise create a hazard to life or constitute a public nuisance, the superintendent shall:

(1) Require new industries or industries with significant increase in discharges to submit information on wastewater characteristics and obtain prior approval for discharges;

(2) Require other methods of disposal; and/or

(3) Require pretreatment to an acceptable condition for discharge to the public sewers; and/or

(4) Require control over the quantities and rates of discharge; and/or

(5) Require facilities to prevent accidental discharge of any unacceptable wastes; and

(6) Require payment to cover the added cost of handling and treating the wastes not covered by sewer charges under the provisions of this chapter and all ordinances amendatory thereof and supplemental thereto, and any fines, penalties or damages assessed against the district for discharge of such wastes.

Section 2. That the Secretary of the Board of Sanitary Commissioners is hereby directed to forward a copy of this resolution to the Office of the Clerk-Treasurer as clerk of the legislative body, with a request that the Town Council of the Town of Highland, take up the matter for consideration and action at its earliest opportunity.

Duly Adopted and approved this 5 Day of O 2024, by the Board of Sanitary Commissioners of the Town of Highland Sanitary District, Lake County, Indiana by a vote of ____ in favor and ____ opposed.

SANITARY DISTRICT of HIGHLAND
By Its BOARD of COMMISSIONERS:

Richard Garcia, President

Attest:

David Jones, Secretary

ATTACHMENT I

RATE ORDINANCE

March 2019; Revised June 2019; Revised March 2020; Revised February 2021; Revised January 2024

12-20-350

RESOLUTION NO. 2023-16
A PROPOSED RESOLUTION of the SANITARY DISTRICT of HIGHLAND, LAKE COUNTY, INDIANA

A RESOLUTION MODIFYING AND ESTABLISHING USER FEES FOR THE COLLECTION, TREATMENT AND DISPOSAL OF WASTEWATER PURSUANT TO I.C. 36-9-25 ET SEQ.

WHEREAS, The Sanitary District of Highland is governed by its Board of Sanitary Commissioners, pursuant to the provisions of IC 36-9-25 et seq; and

WHEREAS, IC 36-9-25-9 specifically provides that the Board of Sanitary Commissioners shall manage and control all works of the district and may purchase, acquire, construct, reconstruct, operate, repair and maintain all sewage works; and

WHEREAS, The Board of Sanitary Commissioners in performing its duties, may adopt resolutions, rules and by-laws that are necessary to carry out the provisions of IC 36-9-25 including repealing and amending them consistent with the Sanitary District Law; and

WHEREAS, IC 36-9-25-11 and Section 12.10.050 of the Highland Municipal Code, specifically provides that the Board of Sanitary Commissioners may fix fees for disposal of sewage and other waste discharged into the sewerage system, which includes structures necessary or useful for the collection, treatment, purification, and sanitary disposal of the liquid waste, solid waste, sewage, storm drainage, and other drainage of a municipality, and may change fees from time to time in order to produce revenues sufficient to pay operation, maintenance and Administrative expenses; and

WHEREAS, Pursuant to HMC Section 12.20.360 ***Annual Review***, the Board of Sanitary Commissioners has studied the current rates and charges of the district and has determined that the revenues are insufficient to provide reasonable funds for operation, maintenance, and replacements to the sewerage systems or that the rates need to better consistently recover fixed costs associated with the operation, maintenance and replacements to systems; and

WHEREAS, The Board has determined that changing rates and charges over all classes of users over the next three (3) years beginning on **September 1, 2023**, is necessary to provide sufficient revenues for operation, maintenance, and replacements to the sewerage systems; and

WHEREAS, The Board now desires to change the currently established sewer use rates for all classes of users,

NOW, THEREFORE, BE IT RESOLVED by the Board of Sanitary Commissioners of the Sanitary District of the Town of Highland, Indiana, and the Department of Public Sanitation that the following provisions and associated rates and charges for the disposal of sewage and other waste discharged into the sewerage system be changed subject to IC 36-9-25-11(c):

Section 1. That Section 12.20.350 (C) of the Highland Municipal Code be hereby repealed in its entirety and amended to add a new section to be numbered Section 12.20.350 (C), which shall read as follows:

12.20.350 Wastewater Rates and Charges; Collection and Billing.

(C) Rates and charges for wastewater treatment and management services are hereby fixed and shall be comprised of the following metered rates and base charges to be effective beginning **September 1, 2023:**

(1) A Monthly Base rate as set forth in this schedule, which shall be charged unrelated to metered usage:

Meter Size	Base Rate Total
5/8″	**$8.42**
¾″	**$12.62**
1″	**$21.43**
1 ¼″	**$33.52**
1 ½″	**$47.40**
2″	**$82.15**
3″	**$186.49**
4″	**$331.37**

(2) A monthly rate based upon metered usage:

Year	Metered Rate
2023	**$7.27** per 1,000 metered gallons
2024	**$7.56** per 1,000 metered gallons
2025	**$7.86** per 1,000 metered gallons
2026	**$8.16** per 1,000 metered gallons

(3) For users of the sewage works that are unmetered users of the municipal water works, the monthly charge shall be determined by equivalent single-family residential units, except as otherwise herein provided. Sewage service bills shall be rendered pursuant to Section 12.20.350 (A). The schedule on which said rates shall be determined is as follows:

Year	Unmetered monthly User Charge:
2023	**$56.01** per unit.
2024	**$57.17** per unit.
2025	**$58.37** per unit.
2026	**$59.57** per unit

(4) An additional surcharge for each dwelling unit over one serviced through a single water meter shall be added to the above rates and charged according to the following schedule:

Year	Monthly surcharge:
2023	**$8.49** per unit.
2024	**$8.49** per unit.
2025	**$8.49** per unit.
2026	**$8.49** per unit.

Section 2. That pursuant to IC 36-9-25-11(c), the fees and charges imposed by the passage and adoption of this resolution shall become and be effective upon all users whose property is within the district, upon approval by ordinance passed and approved by the municipal legislative body, which is the Highland Town Council;

Section 3. That the Secretary of the Board of Sanitary Commissioners is hereby directed to forward a copy of this resolution to the Office of the Clerk-Treasurer as clerk of the legislative body, with a request that the Town Council of the Town of Highland, take up the matter for consideration and action at its earliest opportunity.

Introduced on July 18, 2023. Ordered for a public hearing on August 1, 2023, all, pursuant to IC 36-9-25-11.

Duly Adopted and approved this _____ Day of _____ 2023, by the Board of Sanitary Commissioners of the Town of Highland Sanitary District, Lake County, Indiana by a vote of ____ in favor and ____ opposed.

SANITARY DISTRICT of HIGHLAND
By Its BOARD of COMMISSIONERS:

_____
Richard Garcia, President

Attest:

_____
David Jones, Secretary

ATTACHMENT J

2016-2022 FINANCIAL REPORTS

March 2019; Revised June 2019; Revised March 2020; Revised February 2021; Revised January 2024

Sewage Works □ Highland Sanitary District

Gals/1000 — 2016

Month	WW Billed	WW Received	Customers	Consumption	SW Billed	SW Received	Deposited in Special San Dist Operating Fund: Solid Waste Billed	Solid Waste Received
January	$233,530.12	$231,872.43	8,905	55488.00	$114,423.50	$116,257.61	$146,577.31	$151,591.07
February	$188,419.42	$191,417.36	8,907	39470.00	$116,668.11	$113,295.62	$148,831.02	$147,097.47
March	$246,309.89	$242,534.04	8,889	59,005.00	$116,411.57	$119,138.10	$148,607.54	$152,097.42
April	$184,902.99	$180,147.82	8,967	**33,651.00**	$116,605.11	$116,538.09	$155,026.93	$152,157.40
May	$217,478.55	$283,601.37	8,966	**50,375.00**	$116,641.39	$149,383.69	$155,485.21	$200,732.40
June	$221,942.32	$189,039.21	8,956	**44,337.00**	$126,910.42	$113,977.36	$158,344.72	$154,773.27
*** July	$235,518.16	$238,295.80	8,082	**50,614.00**	$124,259.80	$135,184.54	$153,183.75	$176,449.93
August	$205,556.40	$225,579.98	8,950	**40,092.00**	$125,623.12	$120,566.44	$156,139.25	$153,631.41
September	$219,981.38	$213,035.73	8,943	**45,661.00**	$125,674.11	$129,098.45	$155,665.79	$161,539.34
October**	$206,097.61	$212,919.24	8,945	**62,704.00**	$124,889.13	$123,068.04	$155,543.55	$152,400.17
November	$215,033.28	$270,729.26	8,925	**43,171.00**	$124,996.81	$125,299.95	$155,759.33	$157,424.14
December	$246,486.98	$214,680.91	8,921	**53,288.00**	$124,126.62	$120,037.38	$154,737.69	$153,722.50
Total	**$2,621,257.10**	**$2,693,853.15**		577,856.00	**$1,457,229.69**	**$1,481,845.27**	**$1,843,902.09**	**$1,913,616.52**

2016

Solid Waste	Customers	Low Volume	Solid Waste	Customers	Low Volume
January	7,971	1,525	July	8,003	$ 1,524
February	8,011	1,525	August	8,015	$ 1,518
March	7,963	1,527	September	8,014	1,525
April	8,001	1,521	October	8,012	1,518
May	8,062	1,525	November	8,004	1,515
June	8,011	1,526	December	8,041	1,511
Totals:			**Totals:**		

Solid Waste Aged Trial balance

Current:	$21,780.46
30 Days	$3,376.82
60 days	$720.23
90 days	$240.84
Over 90 Days	$1,357.98
Total Receivable	**$27,476.33**

Deposited into the Sanitary District Special Operating Fund

Revised: 02/02/19
04:52 PM

Hammond Sanitary District
Billed Treatment

	Million Gallons	Consumption Difference
January	122.599	(55,365.401)
February	95.255	(39,374.7)
March	116.046	(58,889.0)
April	112.005	(33,539.0)
May	116.273	(50,258.7)
June	72.804	(44,264.2)
July	92.144	(50,521.9)
August	115.713	(39,976.3)
September	80.006	(45,581.0)
October	80.006	(62,624.0)
November	97.636	(43,073.4)
December	**98.224**	(53,189.8)
Total:	1,198.711	
	Total:	(576,657.289)

Expenditure by Fund Enterprise

Month	Operating	Hammond SD Monthly Charges	Improvement
January	$307,958.23	$93,226.67	$114,532.64
February	$246,225.69	$80,253.25	$33,492.71
March	$243,347.66	$86,710.50	$0.00
April	$280,915.21	$86,058.75	$18,895.08
May	$226,132.65	$89,221.71	$129,357.39
June	$364,737.65	$73,316.55	$15,326.42
July	$284,492.99	$93,484.57	$4,160.00
August	$209,562.02	$92,708.42	$0.00
September	$394,239.72	$75,174.50	$40,129.16
October	$249,007.43	$77,161.04	$34,656.47
November	$298,064.00	$89,171.70	$10,490.00
December	$359,659.76	**$90,703.65**	$3,618.30
Totals:	$3,464,343.01	$1,027,191.31	$404,658.17
Avg Exp	$288,695.25		
-48106.45%			

Months of Expenditures: **12**

$3,869,001.18 **Disbursements**

Waste Water Aged Trial balance

Current:	$28,901.25
30 Days	$3,327.38
60 days	$725.06
90 days	$691.75
Over 90 Days	$3,854.77
Total Receivable	**$37,500.21**

Storm Water Aged Trial balance

Current:	$13,384.42
30 Days	$1,914.47
60 days	$648.17
90 days	$410.70
Over 90 Days	$2,349.11
Total Receivable	**$18,706.87**

Office of the Clerk-Treasurer
Michael W. Griffin, Clerk-Treasurer
Kathryn A. Minchuk, Deputy

Dec-16

Reserve Balance Should be: $800,000.00			Operating Balance Should be: $700,000.00		Dec-16			Bond & Interest
Enterprise Fun Fund	**Sewage Improvement**	**Extension (Revolving)**	**Sewage Cash Reserve**	**Operating Fund**	Capital Fund			1965 Revenue Bonds
Balances:	**$800,000**	**$236,364.72**	**$225,270.87**	**$700,000.00**	**Cash:**	$6,931,282.32		**$1,244.00**
	$0.00			**$0.00**	**Approp & P.O.**	$6,942,500.16	Due to Sewage Imp.	
Revenue YTI	**$ 776,288.63**	**$ -**	$ 225,270.87	#########	**Delta**	($11,217.84)	$0.00	$ -

Gross Revenue YTD: **$4,710,139.35**
Adjusted **$4,710,139.35**

San Dist Coop Equipment Fund	$0.00
San Dist Pub Safety fund	$0.00
San Dist Excess Levy Fund	$ -
San Dist Judgement Bond Fund	$ -

Rate per 1,000 gallons since August 2014	**$2.80**
2016 **Rate per 1,000 gallons since July 2015**	**$3.02**
Rate per 1,000 gallons since July 2016	**$3.26**

San Dist Imp Loan	**$ 525,000.00**
Principal Paid to Date	$287,899.24
Interest Paid to Date	$12,100.76
Principal Payable	**$ 237,100.76**

Sewage Works □ Highland Sanitary District

Gals/1000 | DECEMBER | 2017

Month	WW Billed	WW Received	Customers	Consumption	SW Billed	SW Received	Deposited in Special San Dist Operating Fund: Solid Waste Billed	Solid Waste Received
January	$218,845.98	$246,175.20	8,918	44,071.00	$124,644.16	$127,987.82	$154,389.48	$161,839.69
February	$235,645.74	$202,983.40	8,910	49,656.00	$124,411.38	$115,607.76	$154,377.83	$142,795.44
March	$207,380.94	$227,800.63	9,003	40,878.00	$125,295.50	$123,696.13	$161,698.18	$156,526.14
April	$200,259.86	$209,908.60	8,992	38,914.00	$123,777.25	$122,518.14	$159,391.21	$156,427.77
May	$225,274.64	$199,291.46	8,999	46,482.00	$124,913.81	$124,145.03	$160,989.75	$159,152.05
June	$211,646.29	$216,547.71	8,985	41,847.00	$114,648.48	$127,107.95	$160,318.26	$160,977.06
July	$240,220.97	$209,553.23	8,981	50,812.00	$132,034.45	$125,058.46	$160,027.02	$156,806.19
August	$224,121.15	$238,603.19	8,980	45,611.00	$116,777.77	$125,078.82	$161,193.57	$160,327.04
September	$202,334.19	$226,955.48	9,006	39,302.00	$123,632.60	$129,308.28	$159,695.47	$167,788.46
October	$267,902.82	$208,794.74	8,998	**59,169.00**	$124,295.16	$124,611.59	$160,508.63	$155,443.80
November	$234,207.44	$254,618.57	8,998	49,155.00	$124,914.02	$123,361.79	$160,978.17	$157,101.65
December	$225,215.61	$238,474.06	8,987	**46,170.00**	$122,389.46	$126,161.04	$159,860.15	$160,996.40
Total	**$2,693,055.63**	**$2,679,706.27**		552,067.00	**$1,481,734.04**	**$1,494,642.81**	**$1,913,427.72**	**$1,896,181.69**

2017

Solid Waste	Customers	Low Volume (Included in count)	Solid Waste	Customers	Low Volume (Included in count)
January	7,979	1,512	July	8,028	$ 1,513
February	7,991	1,515	August	8,028	$ 1,507
March	8,049	1,520	September	8,033	1,502
April	8,046	1,517	October	8,023	1,505
May	8,046	1,514	November	8,021	1,517
June	8,033	1,512	December	8,010	1,508
Totals:			**Totals:**		

Solid Waste Aged Trial balance	
Current:	$22,846.18
30 Days	$8,703.09
60 days	$3,057.00
90 days	$1,010.50
Over 90 Days	$2,627.26
Total Receivable	**$38,244.03**

Deposited into the Sanitary District Special Operating Fund

Revised: 02/02/19
04:50 PM

Hammond Sanitary District Billed Treatment	Million Gallons	Consumption Difference
January	118.806	(43,952.19)
February	90.350	(49,565.65)
March	132.410	(40,745.59)
April	142.189	(38,771.81)
May	125.586	(46,356.41)
June	72.969	(41,774.03)
July	84.777	(50,727.22)
August	71.436	(45,539.56)
September	63.055	(39,238.95)
October	108.102	(59,060.90)
November	104.859	(49,050.14)
December	**77.223**	(46,092.78)
Total:	1,191.762	
	Total:	**(550,875.24)**

FY 2017

Expenditure by Fund Enterprise Month	Operating	Hammond SD Monthly Charges	Improvement
January	$216,192.20	$89,606.28	$13,339.50
February	$376,342.03	$82,070.43	$108,184.84
March	$351,073.57	$131,124.56	$0.00
April	$262,134.91	$170,634.49	$0.00
May	$345,109.86	$151,910.89	$0.00
June	$447,737.60	$87,518.89	$43,257.92
July	$379,102.80	$101,740.09	$33,112.96
August	$345,736.83	$85,518.89	$13,104.56
September	$356,921.08	$75,673.69	$0.00
October	$290,640.12	$129,730.09	$0.00
November	$276,639.90	$125,838.49	$32,009.78
December	$382,939.61	$92,675.29	$87,956.25
Totals:	$4,030,570.51	$1,324,042.08	$330,965.81
Avg Exp	$335,880.88	Months of Expenditures 12	**$4,361,536.32** Disbursements

-46223.59%

Waste Water Aged Trial balance	
Current:	$27,378.71
30 Days	$9,611.36
60 days	$2,676.76
90 days	$1,037.94
Over 90 Days	$5,877.33
Total Receivable	**$46,582.10**

Storm Water Aged Trial balance	
Current:	$14,177.63
30 Days	$6,735.09
60 days	$2,187.00
90 days	$532.24
Over 90 Days	$3,307.79
Total Receivable	**$26,939.75**

Office of the Clerk-Treasurer
Michael W. Griffin, Clerk-Treasurer
Kathryn A. Minchuk, Deputy

FUND BALANCES

Reserve Balance — **Should be: $800,000.00**
Operating Balance — **Should be: $700,000.00**
Dec-17

Enterprise Funds Fund Balances:	Sewage Improvement	Extension (Revolving)	Sewage Cash Reserve	Operating Fund	Capital Fund			Bond & Interest 1965 Revenue Bonds
	$727,144	**$240,637.42**	**$602,702.81**	**$700,000.00**	**Cash:**	$4,473,112.20	**$ 3,710,000.00**	**$1,244.00**
Delta	($72,856.27)			$0.00	**Approp & P.O.**	$4,763,112.20		
Revenue YTD	**$ 258,109.54**	**$ 4,272.70**	**$ 714,931.84**	**$ 3,991,443.68**	**Delta**	**($290,000.00)**		$ -

Gross Revenue YTD: **$4,253,825.92**
Adjusted **$4,249,553.22**

San Dist Coop Equipment Fund	$0.00
San Dist Pub Safety fund	$0.00
San Dist Excess Levy Fund	$ -
San Dist Judgement Bond Fund	$ -

San Dist Imp Loan	**$ 525,000.00**
Principal Paid to Date	$415,493.88
Interest Paid to Date	$14,506.12
Principal Payable	**$ 109,506.12**

Principal Paid
79%

Rate per 1,000 gallons since August 2014	**$2.80**
Rate per 1,000 gallons since July 2015	**$3.02**
Rate per 1,000 gallons since July 2016	**$3.26**

Sewage Works • Highland Sanitary District

Gals/1000 | DECEMBER | 2018

Month	WW Billed	WW Received	Customers	Consumption	SW Billed	SW Received	Deposited in Special San Dist Operating Fund: Solid Waste Billed	Solid Waste Received
January	$251,157.38	$243,538.78	8,986	54,054.00	$124,568.45	$137,710.15	$160,216.41	$177,812.16
February	$227,267.00	$239,929.00	8,986	47,241.00	$123,854.55	$121,597.37	$159,821.80	$159,160.10
March	$213,711.15	$229,113.56	8,991	42,683.00	$123,502.26	$130,307.53	$166,292.03	$159,072.71
April	$207,222.54	$208,877.19	8,999	40,967.00	$122,508.71	$127,366.04	$165,819.01	$163,627.58
May	$226,073.20	$196,116.25	9,032	47,212.00	$123,836.51	$119,918.25	$166,881.22	$158,377.56
June	$215,498.34	$222,566.93	9,036	43,174.00	$124,133.85	$124,984.08	$166,929.69	$163,349.53
July	$206,828.79	$214,272.85	9,037	40,678.00	$123,914.19	$127,919.46	$166,778.26	$168,263.96
August	$210,855.04	$206,228.01	9,033	41,755.00	$124,076.00	$123,085.41	$166,781.38	$162,497.35
September	$217,729.76	$201,674.82	9,049	43,802.00	$124,532.77	$124,058.69	$167,373.16	$161,950.83
October	$232,907.75	$215,808.37	9,021	**48,494.00**	$124,310.53	$126,881.75	$166,919.69	$167,770.75
November	$221,502.87	$226,169.88	9,013	45,022.00	$123,813.92	$124,277.50	$166,655.57	$161,227.46
December	$202,747.53	$215,492.02	8,036	**39,262.00**	$124,810.48	$123,277.28	$166,861.09	$162,457.81
Total	**$2,633,501.35**	**$2,619,787.66**		534,344.00	**$1,487,862.22**	**$1,511,383.51**	**$1,987,329.31**	**$1,965,567.80**

2018

Solid Waste	Customers	Low Volume (included in count)	Solid Waste	Customers	Low Volume (included in count)
January	8,010	1,512	July	8,049	1,515
February	8,013	1,513	August	8,050	1,509
March	8,013	1,511	September	8,062	1,508
April	8,024	1,506	October	8,039	1,508
May	8,049	1,510	November	8,036	1,508
June	8,050	1,513	December	8,036	1,514
Totals:			**Totals:**		

Solid Waste Aged Trial balance

Current:	$16,057.88
30 Days	$3,644.03
60 days	$385.41
90 days	$621.55
Over 90 Days	$4,604.38
Total Receivable	**$25,313.25**

Deposited into the Sanitary District Special Operating Fund

Revised: 02/02/19
04:50 PM

Hammond Sanitary District
Billed Treatment

	Million Gallons	Consumption Difference
January	78,836.00	24,782.00
February	119,438.000	72,197.00
March	109,299.000	66,616.00
April	96,749.500	55,782.50
May	99,211.000	51,999.00
June	92,355.000	49,181.00
July	132,825.000	92,147.00
August	93,497.000	51,742.00
September	**86,542.000**	42,740.00
October	93,407.000	44,913.00
November	98,148.000	53,126.00
December	115,977.000	76,715.00
Total:	1,216,284.500	
	Total:	**681,940.50**

FY 2018

Expenditure by Fund Enterprise Month	Operating	Hammond SD Monthly Charges	Improvement
January	$336,283.14	$94,610.89	$49,510.80
February	$303,719.50	$143,333.29	$7,538.70
March	$354,864.75	$131,166.49	$0.00
April	$353,704.80	$116,107.09	$107,924.84
May	$331,805.02	$119,060.89	$0.00
June	$360,547.97	$110,833.69	$4,901.32
July	$335,190.34	$159,397.69	$42,285.12
August	$402,819.35	$112,204.09	$51,993.26
September	$399,674.80	$103,858.09	$25,325.88
October	$352,768.15	$112,088.40	$0.00
November	$312,658.54	$117,785.29	$459,925.70
December	$290,241.59	$139,180.09	$301,631.75
Totals:	**$4,134,277.95**	$1,459,625.99	**$1,051,037.37**
Avg Exp	$344,523.16		
56.07%			

Months of Expenditures
12

$5,185,315.32
Disbursements

Waste Water Aged Trial balance

Current:	$18,648.74
30 Days	$2,124.16
60 days	$281.97
90 days	$388.45
Over 90 Days	$7,962.87
Total Receivable	**$29,406.19**

Storm Water Aged Trial balance

Current:	$10,488.37
30 Days	$2,319.14
60 days	$475.11
90 days	$499.75
Over 90 Days	$4,142.84
Total Receivable	**$17,925.21**

Office of the Clerk-Treasurer
Michael W. Griffin, Clerk-Treasurer
Erin K. Stojic, Deputy Clerk-Treasurer

FUND BALANCES — **Dec-18**

Improvement Balance Should be: $800,000.00
Operating Balance Should be: $700,000.00

Enterprise Funds Fund Balances:	Sewage Improvement	Extension (Revolving)	Sewage Cash Reserve	Operating Fund	Capital Fund	
	$258,384	**$248,892.35**	**$541,984.96**	**$700,000.00**	Cash:	$3,207,782.96
Delta	($541,616.08)			**$0.00**	Approp & P.O.	$3,207,239.94
Revenue YTD	**$ 574,189.54**	**$ 8,254.93**	**$ 276,782.15**	**$ 4,102,799.34**	Delta	**$543.02**

	Original	Bond & Interest
	$ 3,710,000.00	1965 Revenue Bonds
		$1,244.00
		$ -

Gross Revenue YTD: **$4,685,243.81**
Adjusted **$4,676,988.88**

San Dist Coop Equipment Fund	$0.00
San Dist Pub Safety fund	$0.00
San Dist Excess Levy Fund	$ -
San Dist Judgement Bond Fund	$ -

Rate per 1,000 gallons since August 2014	**$2.80**
Rate per 1,000 gallons since July 2015	**$3.02**
Rate per 1,000 gallons since July 2016	**$3.26**

REVISED from REVIEW INTERNALLY

San Dist Imp Loan	**$ 525,000.00**	**Principal Paid**
Principal Paid to Date	$523,935.66	99.8%
Interest Paid to Date	$16,064.34	
Principal Payable	**$ 1,064.34**	

Sewage Works • Highland Sanitary District

Month	WW Billed	WW Received	Customers	Gals/1000 Consumption	SW Billed	SW Received	Deposited in Special San Dist Operating Fund: Solid Waste Billed	Solid Waste Received
January	$224,938.52	$204,348.93	9,014	46,036.00	$124,363.92	$129,075.21	$166,838.05	$169,335.18
February	$223,006.45	$252,149.02	9,021	45,555.00	$124,707.84	$124,623.13	$166,758.64	$161,920.26
March	$206,220.25	$222,856.51	9,013	40,459.00	$124,713.63	$126,980.29	$166,700.94	$167,605.27
April	$217,570.26	$199,786.01	9,030	43,835.00	$124,945.06	$125,052.38	$166,861.90	$161,545.93
May	$208,815.06	$215,565.98	9,042	41,158.00	$124,443.88	$126,238.26	$167,079.94	$165,988.14
June	$214,881.19	$206,195.07	9,045	43,048.00	$124,589.41	$126,543.81	$188,327.59	$165,575.06
July	$208,874.06	$211,338.08	9,034	41,478.00	$124,382.40	$123,959.17	$193,897.66	$183,583.74
August	$213,522.72	$206,310.19	9,045	42,578.00	$124,985.62	$125,870.86	$194,574.68	$183,564.32
September	$216,560.77	$210,301.90	9,022	43,536.00	$124,785.82	$126,536.52	$194,187.45	$191,373.72
October	$228,802.25	$209,954.36	9,034	47,496.00	$124,680.92	$123,492.90	$188,166.08	$182,435.39
November	$219,003.00	$220,272.08	9,011	44,347.00	$124,698.00	$124,653.91	$193,929.28	$184,439.07
December	$212,957.28	$216,864.52	9,025	42,437.00	$124,833.40	$127,524.29	$194,066.41	$192,177.92
Total	**$2,595,151.81**	**$2,575,942.65**	**9,028**	**521,963.00**	**$1,496,129.90**	**$1,510,550.73**	**$2,181,388.62**	**$2,109,544.00**

DECEMBER 2019

2019

Solid Waste	Customers	Low Volume (included in count)	Solid Waste	Customers	*Former low volume*
January	8,032	1,515	July	8,053	1,518
February	8,037	1,515	August	8,062	1,518
March	8,035	1,510	September	8,048	1,515
April	8,042	1,508	October	8,056	1,520
May	8,059	1,510	November	9,139	1,507
June	8,058	1,511	December	8,049	1,513
Totals:			**Totals:**	8,139	

Solid Waste Aged Trial balance

Current:	$14,274.80
30 Days	$2,439.70
60 days	$426.40
90 days	$128.40
Over 90 Days	$688.64
Total Receivable	**$17,957.94**

Deposited into the Sanitary District Special Operating Fund

Revised: 12/05/23
02:17 PM

Hammond Sanitary District
Billed Treatment

	1,000 Gallons	Consumption Difference
January	106,619	60,583.00
February	118,358	72,803.00
March	113,757	73,298.00
April	144,988	101,153.00
May	188,208	147,050.00
June	132,189	89,141.00
July	104,517	63,039.00
August	77,142	34,564.00
September	94,892	51,356.00
October	124,534	77,038.00
November	114,113	69,766.00
December	92,576	50,139.00
Total:	1,411,893	
	Total:	**889,930.00**

2019

Expenditure by Fund Enterprise Month	Operating	Hammond SD Monthly Charges	Improvement
January	$351,880.58	$127,950.49	$87,257.00
February	$395,626.35	$142,037.29	$37,529.13
March	$292,350.70	$136,516.09	$352,607.03
April	$322,363.89	$173,993.29	$34,105.60
May	$333,301.86	$225,849.60	$0.00
June	$370,212.00	$158,634.49	$0.00
July	$343,289.92	$125,428.09	$0.00
August	$361,379.43	$92,578.09	$0.00
September	$260,355.51	$113,878.09	$0.00
October	$268,917.74	$154,248.49	$0.00
November	$260,714.97	$136,943.29	$0.00
December	$312,209.40	$111,098.89	$6,220.00
Totals:	**$3,872,602.35**	$1,699,156.19	**$517,718.76**
Avg Exp	$322,716.86	Months of Expenditures 12	$4,390,321.11
63.03%		$141,596.35	Disbursements

Waste Water Aged Trial balance

Current:	$15,120.24
30 Days	$1,604.42
60 days	$359.59
90 days	$109.68
Over 90 Days	$1,001.39
Total Receivable	**$18,195.32**

Storm Water Aged Trial balance

Current:	$7,416.84
30 Days	$1,872.49
60 days	$467.58
90 days	$49.61
Over 90 Days	$344.64
Total Receivable	**$10,151.16**

Office of the Clerk-Treasurer
Michael W. Griffin, Clerk-Treasurer
Kelli A. Strbjak, Deputy Clerk-Treasurer

FUND BALANCES

Improvement Balance
Should be: $800,000.00

Operating Balance
Should be: $700,000.00

DECEMBER

Enterprise Funds	Sewage Improvement	Extension (Revolving)	Sewage Cash Reserve	Operating Fund	Capital Fund	
Balances:	**$247,344**	**$255,820.05**	**$106,821.10**	**$700,000.00**	**Cash:**	$2,142,245.78
Delta	($552,656.16)			$0.00	**Approp & P.O.**	$2,121,606.38
Revenue YTD	**$ 476,414.19**	**$ 6,927.70**	**$ -**	**$ 3,882,453.59**	**Delta**	**$20,639.40**
					Temp Loan to B&I	$ -
					Delta	*$ 20,639.40*

(minus extension receipts)

	Original	Bond & Interest 1965 Revenue Bonds
	$ 3,710,000.00	**$1,244.00**
		$ -

Interest

Gross Revenue YTD: **$4,365,795.48**
Adjusted **$4,358,867.78**

San Dist Coop Equipment Fund	$0.00
San Dist Pub Safety fund	$0.00
San Dist Excess Levy Fund	$ -
San Dist Judgement Bond Fund	$ -

San Dist Imp Loan	**$ 525,000.00**
Principal Paid to Date	$525,000.00
Interest Paid to Date	$16,064.53
Principal Payable	$ -

Principal Paid
100.0%

Rate per 1,000 gallons since August 2014	**$2.80**
Rate per 1,000 gallons since July 2015	**$3.02**
Rate per 1,000 gallons since July 2016	**$3.26**

Sewage Works • Highland Sanitary District

Gals/1000 | DECEMBER | 2020

Deposited in Special San Dist Operating Fund

Month	WW Billed	WW Received	Customers	Consumption	SW Billed	SW Received	Solid Waste Billed	Solid Waste Received
January	$215,714.51	$211,960.27	9,031	43,184.00	$125,072.02	$128,072.33	$194,710.23	$194,066.77
February	$215,471.69	$212,269.11	9,019	43,199.00	$124,818.63	$126,333.03	$194,231.45	$192,665.21
March	$210,604.92	$208,664.02	9,039	42,065.00	$124,264.84	$127,963.55	$202,952.55	$188,844.98
April	$211,619.27	$192,795.80	9,021	42,200.00	$124,718.21	$118,353.16	$194,140.11	$193,735.02
May	$252,178.59	$239,662.84	9,030	45,352.00	$124,659.40	$118,622.71	$202,466.52	$187,526.13
June	$208,459.77	$218,863.48	9,013	41,258.00	$124,411.32	$130,708.44	$202,072.96	$199,860.27
July	$217,456.56	$214,727.94	9,021	44,409.00	$122,547.72	$129,184.74	$200,482.08	$206,584.86
August	$217,582.35	$210,862.65	9,064	43,980.00	$124,446.17	$123,863.41	$202,633.73	$194,297.36
September	$219,219.69	$210,380.26	9,177	44,464.00	$124,500.48	$122,265.75	$202,824.03	$195,436.22
October	$247,308.74	$216,305.34	9,075	53,679.00	$123,095.23	$124,766.15	$200,471.44	$200,158.18
November	$215,664.22	$225,120.96	9,029	43,479.00	$124,374.80	$114,925.15	$202,355.01	$197,198.91
December	$142,466.70	$236,888.77	8,992	41,621.00	$122,005.24	$140,017.18	$192,490.26	$209,065.72
Total	**$2,573,747.01**	**$2,598,501.44**		**528,890.00**	**$1,488,914.06**	**$1,505,075.60**	**$2,391,830.37**	**$2,359,439.63**

2020

Solid Waste	Customers	*Former low volume*		Solid Waste	Customers	*Former low volume*
January	8,052	1,510		July	8,040	1,510
February	8,043	1,511		August	8,075	1,510
March	8,056	1,511		September	8,068	1,512
April	8,035	1,502		October	8,092	1,507
May	8,043	1,511		November	8,048	1,511
June	8,029	1,504		December	8,026	1,509
Totals:				**Totals:**	8,051	

Solid Waste Aged Trial balance

Current:	$14,121.61
30 Days	$3,536.08
60 days	$256,059.00
90 days	$1,192.57
Over 90 Days	$8,200.68
Total Receivable	**$283,109.94**

Deposited into the Sanitary District Special Operating Fund

Revised: 12/05/23

02:17 PM

Hammond Sanitary District

Billed Treatment

	1,000 Gallons	Consumption Difference
January	131,176	87,992.00
February	98,024	54,825.00
March	112,257	70,192.00
April	128,112	85,912.00
May	193,012	147,660.00
June	116,022	74,764.00
July	105,696	61,287.00
August	76,987	33,007.00
September	71,057	26,593.00
October	69,389	15,710.00
November	69,173	25,694.00
December	77,561	35,940.00
Total:	1,248,466	
	Total:	**719,576.00**

2020

Expenditure by Fund Enterprise Month	Operating	Hammond SD Monthly Charges	Improvement
January	$302,754.17	$157,418.89	$0.00
February	$290,548.02	$117,636.49	$0.00
March	$346,645.74	$134,716.09	$0.00
April	$264,144.67	$153,742.09	$15,729.63
May	$320,449.86	$231,322.09	$87,014.83
June	$361,712.54	$139,234.09	$0.00
July	$454,983.45	$126,842.89	$31,403.54
August	$258,813.38	$92,392.09	$638.24
September	$247,228.84	$85,276.09	$0.00
October	$240,120.77	$83,274.49	$0.00
November	$219,986.91	$83,007.60	$9,140.00
December	$224,017.61	$93,080.89	$0.00
Totals:	**$3,531,405.96**	$1,497,943.79	**$143,926.24**
Avg Exp	**$294,283.83**	Months of Expenditures 12	**$3,675,332.20**
57.64%		$124,828.65	**Disbursements**

Waste Water Aged Trial balance

Current:	$14,121.61
30 Days	$3,536.08
60 days	$256.59
90 days	$1,192.57
Over 90 Days	$8,200.68
Total Receivable	**$27,307.53**

Storm Water Aged Trial balance

Current:	$6,187.78
30 Days	$2,451.15
60 days	$107.52
90 days	$922.38
Over 90 Days	$5,686.72
Total Receivable	**$15,355.55**

Office of the Clerk-Treasurer
Michael W. Griffin, Clerk-Treasurer
Kelli A. Strbjak, Deputy Clerk-Treasurer

FUND BALANCES

Improvement Balance — Should be: $800,000.00

Operating Balance — Should be: $700,000.00

DECEMBER

Enterprise Funds	Sewage Improvement	Extension (Revolving)	Sewage Cash Reserve**	Operating Fund	Capital Fund		Original	Bond & Interest 1965 Revenue Bonds
Balances:	**$760,510**	**$260,092.75**	**$1,821.10**	**$700,000.00**	**Cash:**	$1,308,472.49	**$ 3,710,000.00**	**$1,244.00**
Delta	($39,490.47)			$0.00	**Approp & P.O.**	$6,141,303.76		
Revenue YTD	**$ 654,384.61**	**$ 4,272.70**	**$ -**	**$ 3,543,298.04**	**Delta**	**($4,832,831.27)**		$ -
		$ 9,250.00			**NEW APPROP**	$ 4,860,000.00		
		Gross Revenue YTD:		**$4,201,955.35**	Delta	*$ 27,168.73*	**Interest**	
			Adjusted	**$4,197,682.65**	(minus extension receipts)			

$0.00 ** $105,000 was transferred to the Town

$0.00

$ -

$ -

San Dist Imp Loan	**$**	**525,000.00**
Principal Paid to Date		$525,000.00
Interest Paid to Date		$16,064.53
Principal Payable	$	-

Principal Paid
100.0%

Rate per 1,000 gallons since August 2014	$2.80
Rate per 1,000 gallons since July 2015	$3.02
Rate per 1,000 gallons since July 2016	$3.26

Sewage Works • Highland Sanitary District

Month	WW Billed	WW Received	Customers	Gals/1000 Consumption	SW Billed	SW Received	Deposited in Special San Dist Operating Fund: Solid Waste Billed	Solid Waste Received	
January	$336,422.02	$216,610.56	9,064	46,481.00	$187,031.03	$126,959.10	$203,728.72	$207,687.32	
February	$352,196.57	$301,271.78	9,015	49,332.00	$186,328.90	$174,869.20	$204,238.33	$195,218.35	
March	$345,263.26	$355,740.46	9,043	47,554.00	$187,367.20	$199,556.60	$208,393.41	$207,641.14	
April	$327,189.94	$338,903.56	9,079	43,523.00	$188,379.08	$186,841.60	$195,123.88	$205,080.86	
May	$337,718.08	$321,273.01	9,079	45,601.00	$187,439.22	$187,230.08	$209,077.71	$205,303.36	
June	$323,357.47	$332,227.72	9,102	42,401.00	$189,070.27	$189,075.79	$210,570.80	$206,626.96	
July	$331,889.33	$318,632.03	9,105	44,346.00	$188,912.99	$190,104.11	$210,479.62	$209,388.01	
August	$333,524.53	$328,025.76	9,104	44,674.00	$188,690.43	$190,052.19	$210,376.24	$207,375.08	
September	$281,299.02	$325,630.38	9,119	33,824.00	$188,579.95	$188,124.61	$210,290.44	$207,930.33	
October	$377,846.72	$324,159.34	9,110	53,683.00	$189,190.71	$189,173.92	$210,393.22	$207,006.87	
November	$345,542.12	$327,849.78	9,099	42,890.00	$189,254.56	$192,009.73	$210,084.35	$207,314.90	In trial balance
December	$354,996.80	$302,418.78	9,081	48,778.00	$189,161.95	$186,039.30	$210,326.45	$202,660.77	
Total	**$4,047,245.86**	**$3,792,743.16**		**543,087.00**	**$2,259,406.29**	**$2,200,036.23**	**$2,493,083.17**	**$2,469,233.95**	$ 1,863,960.41
									$ (605,273.54)

2021

Solid Waste	Customers	*Former low volume*		Solid Waste	Customers	*Former low volume*
January	8,080	1,506		July	8,112	1,510
February	8,051	1,511		August	8,112	1,509
March	8,065	1,505		September	8,122	1,509
April	8,094	1,509		October	8,119	1,507
May	8,080	1,512		November	8,112	
June	8,113	1,510		December	8,090	
Totals:				**Totals:**	8,096	

Solid Waste Aged Trial balance

Current:	$14,892.83
30 Days	$1,317.97
60 days	$465.34
90 days	$888.02
Over 90 Days	$9,734.09
Total Receivable	**$27,298.25**

Deposited into the Sanitary District Special Operating Fund

Revised: 12/05/23
02:18 PM

Hammond Sanitary District
Billed Treatment

	1,000 Gallons	Consumption Difference
January	84,405	37,924.00
February	78,671	29,339.00
March	104,220	56,666.00
April	78,621	35,098.00
May	94,909	49,308.00
June	110,277	67,876.00
July	107,951	63,605.00
August	73,986	29,312.00
September	64,141	30,317.00
October	104,899	
November		
December		
Total:	902,080	
	Total:	**358,993.00**

2021

Expenditure by Fund Enterprise Month	Operating	Hammond SD Monthly Charges	Improvement
January	$176,981.32	$101,293.69	$0.00
February	$322,631.25	$94,412.89	$0.00
March	$263,658.44	$125,071.69	$5,000.00
April	$302,448.75	$94,352.89	$87,562.74
May	$278,114.21	$113,898.49	$0.00
June	$210,898.23	$132,340.09	$743.42
July	$376,083.29	$129,548.89	$31,090.11
August	$278,704.17	$88,790.89	$617.50
September	$274,821.44	$76,976.89	$1,216.08
October	$254,423.52	$125,886.49	$108,255.86
November	$246,286.95		$59,694.68
December	$359,829.95		$74,217.50
Totals:	**$3,344,881.52**	$1,082,572.90	**$368,397.89**
Avg Operating Expense	**$278,740.13**	Months of Expenditures **12**	$3,713,279.41
		$90,214.41	Disbursements

Waste Water Aged Trial balance

Current:	$30,738.95
30 Days	$1,142.26
60 days	$385.78
90 days	$994.76
Over 90 Days	$10,923.55
Total Receivable	**$44,185.30**

Storm Water Aged Trial balance

Current:	$12,057.96
30 Days	$1,252.50
60 days	$579.90
90 days	$936.03
Over 90 Days	$7,914.65
Total Receivable	**$22,741.04**

Office of the Clerk-Treasurer
Mark Herak, Clerk-Treasurer
Janice Figueroa, Acting Deputy Clerk-Treasurer

FUND BALANCES

December

Improvement Balance Should be: $800,000.00			Operating Balance Should be: $700,000.00		Capital Fund		Original	Bond & Interest
Enterprise Funds Fund Balances:	Sewage Improvement $800,000	Extension (Revolving) $267,046.45	Sewage Cash Reserve** $2,463,491.42	Operating Fund $700,000.00	Cash:	$285,745.95	$ 3,710,000.00	1965 Revenue Bonds $1,244.00
Delta	$0.00			$0.00	Encumbered YTD plus Unencumbered Balance	$605,701.04		
Revenue YTD	$ 407,888.46	$ 6,953.70	$ 2,461,670.32	$ 3,594,204.93	Delta	($319,955.09)		$ -
		$ -			NEW APPROP	$ -		
		Gross Revenue YTD:		$ 4,009,047.09	Delta	$ (319,955.09)	Interest	
			Adjusted	$ 4,002,093.39	(minus extension receipts)			

** $105,000 was transferred to the Town

San Dist Imp Loan	$	-
Principal Paid to Date		$0.00
Interest Paid to Date		$0.00
Principal Payable	$	-

Principal Paid

Rate per 1,000 gallons since August 2014	**$2.80**
Rate per 1,000 gallons since July 2015	**$3.02**
Rate per 1,000 gallons since July 2016	**$3.26**
Rate per 1,000 gallons since Feb 2021	**$4.85**

2021	Water Consumption	Water Consumption Minus Dyer	Sewage Consumption	Sewage as percent of San Dist Water Consumption	Dyer Consumption	San Dist Percent Difference
January	79,114	47,181	46,481	99%	31,933.00	1.51%
February	81,797	50,131	49,332	98%	31,666.00	1.62%
March	85,044	48,311	47,554	98%	36,733.00	1.59%
April	79,677	44,194	43,523	98%	35,483.00	1.54%
May	87,425	47,888	45,601	95%	39,537.00	5.02%
June	106,978	44,920	42,401	94%	62,058.00	**5.94%**
July	119,277	64,031	44,346	69%	55,246.00	**44.39%**
August	133,137	69,551	44,674	64%	63,586.00	**55.69%**
September	113,674	56,458	33,824	60%	57,216.00	**66.92%**
October	101,648	65,005	53,683	83%	36,643.00	21.09%
November	81,204	43,564	42,890	98%	37,640.00	1.57%
December	83,355	46,410	48,778	105%	36,945.00	-4.85%

Receipts by Month	FUND SEWAGE OPERATING RECEIPTS	FUND SEWAGE IMPROVEMENT RECEIPTS	FUND SEWAGE CASH RESERVE RECEIPTS	FUND EXTENSION & IMPROVEMENT RECEIPTS	SUB TOTAL of OPERATING & IMPROVEMENT RECEIPTS	Disbursements TOTAL DISBURSEMENTS of OPERATING & IMPROVEMENT	2021 O&M plus Improvement NET RECEIPTS for MONTH	TOTAL RECEIPTS from O&M, IMPROVEMENT & RESERVE	GROSS NET RECEIPTS for MONTH
January	$ 350,188.29	$ 39,490.47	$136,376.85	$ -	$ 389,678.76	$176,981.32	$ 212,697.44	$ 526,055.61	$ 349,074.29
February	$ 380,932.48	$ -	$160,296.75	$ -	$ 380,932.48	$322,631.25	$ 58,301.23	$ 541,229.23	$ 218,597.98
March	$ 238,236.42	$ 5,000.00	$290,204.81	$ -	$ 243,236.42	$268,658.44	$ (25,422.02)	$ 533,441.23	$ 264,782.79
April	$ 287,110.09	$ 87,562.74	$144,310.58	$ 4,459.57	$ 374,672.83	$390,011.49	$ (15,338.66)	$ 518,983.41	$ 128,971.92
May	$ 295,060.70	$0.00	$234,424.41	$ 2,494.13	$ 295,060.70	$278,114.21	$ 16,946.49	$ 529,485.11	$ 251,370.90
June	$ 230,666.42	$0.00	$282,954.04	$0.00	$ 230,666.42	$211,641.65	$ 19,024.77	$ 513,620.46	$ 301,978.81
July	$ 349,951.22	$31,833.53	$143,030.42	$ -	$ 381,784.75	$407,173.40	$ (25,388.65)	$ 524,815.17	$ 117,641.77
August	$ 280,102.92	$ 617.50	$242,825.60	$ -	$ 280,720.42	$279,321.67	$ 1,398.75	$ 523,546.02	$ 244,224.35

September	$ 228,764.24	$ 1,216.08	$261,817.16	$ -	$ 229,980.32	$276,037.52	$ (46,057.20)	$ 491,797.48	$ 215,759.96
October	$ 304,285.55	$ 108,255.86	$216,542.55	$ -	$ 412,541.41	$362,679.38	$ 49,862.03	$ 629,083.96	$ 266,404.58
November	$ 238,470.63	$ 59,694.78	$283,341.29		$ 298,165.41	$305,981.63	$ (7,816.22)	$ 581,506.70	$ 275,525.07
December	$ 410,435.97	$ 74,217.50	$65,545.86		$ 484,653.47	$434,047.45	$ 50,606.02	$ 550,199.33	$ 116,151.88
Total:	$ 3,594,204.93	$ 407,888.46	$ 2,461,670.32	$ 6,953.70	$ 4,002,093.39	$ 3,713,279.41	$ 288,813.98	$ 6,463,763.71	$ 2,750,484.30

	Receipts by Month					Disbursements	2020		
	FUND	FUND	FUND	FUND					
	SEWAGE OPERATING RECEIPTS	SEWAGE IMPROVEMENT RECEIPTS	SEWAGE CASH RESERVE RECEIPTS	EXTENSION & IMPROVEMENT RECEIPTS	SUB TOTAL of OPERATING & IMPROVEMENT RECEIPTS	TOTAL DISBURSEMENTS of OPERATING & IMPROVEMENT	O&M plus Improvement NET RECEIPTS for MONTH	TOTAL RECEIPTS from O&M, IMPROVEMENT & RESERVE	GROSS NET RECEIPTS for MONTH
January	$ 295,181.83	$ 47,938.91	$ -	$ -	$ 343,120.74	$ 302,754.17	$ 40,366.57	$ 343,120.74	$ 40,366.57
February	$ 290,024.57	$ 52,011.04	$ -	$ -	$ 342,035.61	$ 290,548.02	$ 51,487.59	$ 342,035.61	$ 51,487.59
March	$ 338,133.25	$ -	$ -	$ 1,778.57	$ 338,133.25	$ 346,645.74	$ (8,512.49)	$ 338,133.25	$ (8,512.49)
April	$ 293,490.19	$ 44,282.35	$ -	$ -	$ 337,772.54	$ 279,874.30	$ 57,898.24	$ 337,772.54	$ 57,898.24
May	$ 339,440.48	$ 7,279.42	$ -	$ 2,494.13	$ 346,719.90	$ 407,464.69	$ (60,744.79)	$ 346,719.90	$ (60,744.79)
June	$ 338,362.22	$0.00	$0.00	$0.00	$ 338,362.22	$361,712.54	$ (23,350.32)	$ 338,362.22	$ (23,350.32)
July	$ 346,754.74	$0.00	$0.00	$ -	$ 346,754.74	$486,386.99	$ (139,632.25)	$ 346,754.74	$ (139,632.25)
August	$ 347,129.94	$ 4,570.00	$0.00	$ -	$ 351,699.94	$259,451.62	$ 92,248.32	$ 351,699.94	$ 92,248.32
September	$ 285,085.36	$ 104,820.15	$0.00	$ -	$ 389,905.51	$247,228.84	$ 142,676.67	$ 389,905.51	$ 142,676.67
October	$ 274,341.12	$ 107,753.78	$0.00	$ -	$ 382,094.90	$240,120.77	$ 141,974.13	$ 382,094.90	$ 141,974.13
November	$ 220,471.32	$ 121,227.42	$0.00	$ -	$ 341,698.74	$229,126.91	$ 112,571.83	$ 341,698.74	$ 112,571.83
December	$ 174,883.02	$ 121,227.42	$0.00	$ -	$ 296,110.44	$229,126.91	$ 66,983.53	$ 296,110.44	$ 66,983.53
Total:	$ 3,543,298.04	$ 611,110.49	$ -	$ 4,272.70	$ 4,154,408.53	$ 3,680,441.50	$ 473,967.03	$ 4,154,408.53	$ 473,967.03

Sewage Works • Highland Sanitary District

Gals/1000 — December — 2022

Month	WW Billed	WW Received	Customers	Consumption	SW Billed	SW Received	Solid Waste Billed	Solid Waste Received
							Deposited in Special San Dist Operating Fund	
January	$325,061.53	$358,477.77	9,080	42,928.00	$188,990.53	$193,514.56	$209,779.31	$213,362.77
February	$309,602.54	$318,983.61	9,057	39,706.00	$188,679.62	$187,022.70	$209,660.34	$204,666.89
March	$319,831.23	$310,983.34	9,087	41,931.00	$188,763.88	$192,977.24	$211,618.65	$210,929.56
April	$330,160.23	$312,141.41	9,110	43,759.00	$189,479.59	$190,869.22	$210,941.67	$209,110.65
May	$323,824.00	$323,450.63	9,107	42,683.00	$187,835.14	$190,737.29	$210,137.78	$210,811.66
June	$323,690.42	$317,573.21	9,091	42,423.00	$187,718.66	$186,892.72	$210,581.74	$209,052.22
July	$323,386.80	$314,768.17	9,124	42,725.00	$187,162.62	$187,278.45	$214,810.41	$207,141.31
August	$321,236.43	$317,769.43	9,111	41,950.00	$186,579.67	$191,413.88	$210,254.42	$211,521.44
September	$329,191.74	$316,578.83	9,135	49,165.00	$186,456.73	$185,800.55	$210,998.60	$206,710.40
October	$313,111.50	$326,421.85	9,104	40,155.00	$184,185.37	$187,532.15	$210,581.77	$209,808.90
November	$299,322.18	$304,082.11	9,076	37,650.00	$186,094.82	$186,091.28	$210,338.18	$207,918.67
December	$350,823.78	$287,468.18	9,132	49,658.00	$191,956.99	$184,383.79	$210,579.43	$204,176.73
Total	$3,869,242.38	$3,808,698.54		514,733.00	$2,253,903.62	$2,264,513.83	$2,530,282.30	$2,505,211.20

In trial balance

2022

Solid Waste	Customers	*Former low volume*		Solid Waste	Customers	*Former low volume*
January	8,090	1,507		July	8,116	1,504
February	8,071	1,508		August	8,108	1,508
March	8,092	1,509		September	8,125	1,504
April	8,111	1,509		October	8,094	1,507
May	8,103	1,506		November	8,083	1,509
June	8,091	1,510		December	8,125	1,509
Totals:				Totals:	8,101	

Solid Waste Aged Trial balance

Current:	$10,763.76
30 Days	$1,742.26
60 days	$622.87
90 days	$1,209.93
Over 90 Days	$12,554.12
Total Receivable	$26,892.94

Deposited into the Sanitary District Special Operating Fund

Revised: 01/13/23
04:57 PM

Hammond Sanitary District
Billed Treatment

	1,000 Gallons	Consumption Difference
January	79,289	36,361.00
February	100,331	60,625.00
March	110,183	68,252.00
April	112,352	68,593.00
May	118,748	76,065.00
June	80,188	37,765.00
July	77,195	34,470.00
August	72,345	30,395.00
September	71,285	22,120.00
October	76,980	
November	71,254	
December		
Total:	970,150	
	Total:	421,813.00

2022

Expenditure by Fund Enterprise — Month	Operating	Hammond SD Monthly Charges	Improvement
January	$291,698.48	$95,154.49	$2,400.00
February	$261,139.45	$120,404.89	$77,764.83
March	$270,168.90	$132,227.29	$23,792.50
April	$308,571.07	$134,830.09	$137,767.91
May	$324,481.47	$142,505.29	$96,807.00
June	$264,707.51	$96,233.29	$85,725.46
July	$358,057.80	$180,180.82	$110,032.00
August	$317,097.26	$169,584.37	$135,245.84
September	$253,121.32	$167,099.73	$89,410.21
October	$267,837.03	$180,448.81	$115,701.96
November	$203,109.73	$167,019.38	$40,536.88
December	$518,427.05	$186,090.82	$39,491.00
Totals:	$3,638,417.07	$1,771,779.27	$954,675.59
		Months of Expenditures	
Avg Operating Expense	$404,268.56	9	$4,593,092.66
	43.18%	$196,864.36	Disbursements

Waste Water Aged Trial balance

Current:	$13,511.54
30 Days	$1,597.99
60 days	$665.82
90 days	$995.97
Over 90 Days	$14,544.89
Total Receivable	$31,316.21

Storm Water Aged Trial balance

Current:	$8,675.57
30 Days	$1,793.26
60 days	$643.28
90 days	$1,232.28
Over 90 Days	$10,245.58
Total Receivable	$22,589.97

Office of the Clerk-Treasurer
Mark Herak, Clerk-Treasurer

19-20-21

FUND BALANCES

Enterprise Funds Fund	Sewage Improvement	Extension (Revolving)	Sewage Cash Reserve**	Operating Fund
Improvement Balance — Should be: $900,000.00			Operating Balance — Should be: $700,000.00	
Balances:	$1,589,517.32	$271,311.43	$3,119,118.75	$700,000.00
Delta	$689,517.32			$0.00
Revenue YTD	$ 1,666,428.08	$ 4,264.98	$ 2,156,887.80	$ 3,912,288.19
		$ -		
$908,000.00	$0.00	Gross Revenue YTD:		$ 5,582,991.25
$ 689,517.32			Adjusted	$ 5,578,716.27

** $105,000 was transferred to the Town

October

Capital Fund	
Cash	$255,012.11
Expenditures available balance	$170,842.19
Delta	$84,169.92
NEW APPROP	$ -
Delta	$ *84,169.92*

(minus estimated receipts)

	Original	Bond & Interest
	$ 3,710,000.00	1965 Revenue Bonds
		$1,244.00
	$ -	

Interest

San Dist Imp Loan $ -
Principal Paid to Date $0.00
Interest Paid to Date $0.00
Principal Payable $ -

Principal Paid

Rate per 1,000 gallons since August 2014	$2.80
Rate per 1,000 gallons since July 2015	$3.02
Rate per 1,000 gallons since July 2016	$3.26
Rate per 1,000 gallons since Feb 2021	$4.85

2022	Water Consumption	Water Consumption Minus Dyer	Sewage Consumption	[illegible]	Dyer Consumption	San Dist Percent Difference
January	80,207	43,590	42,928	98%	36,617	1.54%
February	77,340	40,395	39,706	98%	36,945	1.74%
March	82,313	42,562	47,554	112%	39,751	-10.50%
April	81,687	44,464	43,523	98%	37,223	2.16%
May	90,803	43,388	42,683	98%	47,415	1.65%
June	131,353	65,741	42,423	65%	65,612	54.97%
July	134,218	69,951	42,725	61%	64,267	63.72%
August	125,194	61,805	44,674	72%	63,389	38.35%
September	110,910	61,738	43,616	71%	49,172	41.55%
October	85,073	48,882	40,155	82%	36,191	21.73%
November	69,303	38,311	42,890	112%	30,992	-10.66%
December	85,855	50,459	48,778	97%	35,396	3.45%

Receipts by Month	FUND: SEWAGE OPERATING RECEIPTS	FUND: SEWAGE IMPROVEMENT RECEIPTS	FUND: SEWAGE CASH RESERVE RECEIPTS	FUND: EXTENSION & IMPROVEMENT RECEIPTS	SUB TOTAL of OPERATING & IMPROVEMENT RECEIPTS	Disbursements: TOTAL DISBURSEMENTS of OPERATING & IMPROVEMENT	2022: O&M plus Improvement NET RECEIPTS for MONTH	TOTAL RECEIPTS from O&M, IMPROVEMENT & RESERVE	GROSS NET RECEIPTS for MONTH
January	$ 249,735.93	$ 102,400.00	$163,783.56	$ -	$ 352,135.93	$ 294,098.48	$ 58,037.45	$ 515,919.49	$ 221,821.01
February	$ 499,395.52	$ -	$ -	$ -	$ 499,395.52	$ 338,904.28	$ 160,491.24	$ 499,395.52	$ 160,491.24
March	$ 269,262.66	$ 23,792.50	$223,011.64	$ -	$ 293,055.16	$ 293,961.40	$ (906.24)	$ 516,056.80	$ 222,105.40
April	$ 321,174.82	$ 1,610,356.91	$62,805.85	$ 595.53	$ 1,931,531.73	$ 446,338.98	$ 1,485,192.75	$ 1,994,337.58	$ 1,547,998.60
May	$ 514,887.21	$0.00	$0.00	$ 1,227.69	$ 514,887.21	$ 421,288.47	$ 93,598.74	$ 514,887.21	$ 93,598.74
June	$ 120,444.19	$183,000.00	$252,490.71	$ -	$ 303,444.19	$ 350,432.97	$ (46,988.78)	$ 555,934.90	$ 205,501.93
July	$ 313,184.14	($305,211.54)	$562,954.95	$ -	$ 7,972.60	$ 468,089.80	$ (460,117.20)	$ 570,927.55	$ 102,837.75
August	$ 312,270.39	$ 51,448.84	$145,275.84	$ -	$ 363,719.23	$ 452,343.10	$ (88,623.87)	$ 508,995.07	$ 56,651.97
September	$ 263,198.06	$ 641.37	$255,418.59	$ 2,441.76	$ 263,839.43	$ 342,531.53	$ (78,692.10)	$ 519,258.02	$ 176,726.49
October	$ 248,400.09	$ -	$253,290.18	$ -	$ 248,400.09	$ 383,538.99	$ (135,138.90)	$ 501,690.27	$ 118,151.28
November	$ 248,738.40	$ -	$237,856.48		$ 248,738.40	$243,646.61	$ 5,091.79	$ 486,594.88	$ 242,948.27
December	$ 551,596.78	$ -	$0.00	$ -	$ 551,596.78	$557,918.05	$ (6,321.27)	$ 551,596.78	$ (6,321.27)
Total:	$ 3,912,288.19	$ 1,666,428.08	$ 2,156,887.80	$ 4,264.98	$ 5,578,716.27	$ 4,593,092.66	$ 985,623.61	$ 7,735,804.07	$ 3,142,511.41

Receipts by Month	FUND: SEWAGE OPERATING RECEIPTS	FUND: SEWAGE IMPROVEMENT RECEIPTS	FUND: SEWAGE CASH RESERVE RECEIPTS	FUND: EXTENSION & IMPROVEMENT RECEIPTS	SUB TOTAL of OPERATING & IMPROVEMENT RECEIPTS	Disbursements: TOTAL DISBURSEMENTS of OPERATING & IMPROVEMENT	2021: O&M plus Improvement NET RECEIPTS for MONTH	TOTAL RECEIPTS from O&M, IMPROVEMENT & RESERVE	GROSS NET RECEIPTS for MONTH
January	$ 350,188.29	$ 39,490.47	$136,376.85	$ -	$ 389,678.76	$ 176,981.32	$ 212,697.44	$ 526,055.61	$ 349,074.29
February	$ 380,932.48	$ -	$160,296.75	$ -	$ 380,932.48	$ 322,631.25	$ 58,301.23	$ 541,229.23	$ 218,597.98
March	$ 238,236.42	$ 5,000.00	$290,204.81	$ -	$ 243,236.42	$ 268,658.44	$ (25,422.02)	$ 533,441.23	$ 264,782.79

April	$	287,110.09	$	87,562.74	$144,310.58	$	4,459.57	$	374,672.83	$	390,011.49	$	(15,338.66)	$	518,983.41	$	128,971.92
May	$	295,060.70		$0.00	$234,424.41	$	2,494.13	$	295,060.70	$	278,114.21	$	16,946.49	$	529,485.11	$	251,370.90
June	$	230,666.42		$0.00	$282,954.04		$0.00	$	230,666.42	$	211,641.65	$	19,024.77	$	513,620.46	$	301,978.81
July	$	349,951.22		$31,833.53	$143,030.42	$	-	$	381,784.75	$	407,173.40	$	(25,388.65)	$	524,815.17	$	117,641.77
August	$	280,102.92	$	617.50	$242,825.60	$	-	$	280,720.42	$	279,321.67	$	1,398.75	$	523,546.02	$	244,224.35
September	$	228,764.24	$	1,216.08	$261,817.16	$	-	$	229,980.32	$	276,037.52	$	(46,057.20)	$	491,797.48	$	215,759.96
October	$	304,285.55	$	108,255.86	$216,542.55	$	-	$	412,541.41	$	362,679.38	$	49,862.03	$	629,083.96	$	266,404.58
November	$	238,470.63	$	59,694.78	$283,341.29			$	298,165.41	$	305,981.63	$	(7,816.22)	$	581,506.70	$	275,525.07
December	$	410,435.97	$	74,217.50	$65,545.86			$	484,653.47	$	434,047.45	$	50,606.02	$	550,199.33	$	116,151.88
Total	$	3,594,204.93	$	407,888.46	$ 2,461,670.32	$	6,953.70	$	4,002,093.39	$	3,713,279.41	$	288,813.98	$	6,463,763.71	$	2,750,484.30

ATTACHMENT K

SEWAGE COLLECTION

AND TREATMENT AGREEMENT WITH HAMMOND

March 2019; Revised June 2019; Revised March 2020;
Revised February 2021; Revised January 2024

FIRST AMENDMENT TO SEWAGE COLLECTION AND TREATMENT AGREEMENT BETWEEN THE SANITARY DISTRICT OF THE CITY OF HAMMOND, INDIANA, AND TOWN OF HIGHLAND (CUSTOMER CITY)

This First Amendment is made and entered into this _____ day of May, 2023 by and between the Sanitary District of the City of Hammond, Indiana (the "District"), and the Town of Highland, Indiana ("Customer City") (the "First Amendment"). District and Customer City may be referred to herein as the "Parties".

RECITALS

1. District owns and operates a publicly owned treatment works ("POTW") for the collection and treatment of sanitary sewage wastewater.

2. Customer City has, for many years, transmitted, and District has received, Customer City's wastewater which has been treated at the District's POTW. Customer City desires to continue to transmit its locally generated wastewater to the District for collection and treatment, and District is willing to continue to provide that service to Customer City upon the terms and conditions stated herein.

3. District and Customer City first entered into an agreement for sewage collection and treatment on June 13, 1994 (the "Agreement") that gave Customer City the right to transmit wastewater to District in a volume equal to an instantaneous flow rate of 7.5 million gallons of wastewater per day ("MGD").

4. Pursuant to Section 2 of the Agreement, Customer City exercised its option to extend the initial term of the Agreement for an additional 25 years beginning January 1, 2019, resulting in the term of the Agreement running up to and including December 31, 2043.

5. On February 13, 2017, District and Customer City entered into a Binding Letter of Intent & Settlement Agreement (the "LOI") which provided, among other things, that Customer City was to pay an interim rate of $1.20/1,000 gallons and that future rates would be set pursuant to a cost-of-service study and the interim rate shall apply until implementation of the rate structure established by the cost-of-service study.

6. The LOI further provided that Customer City would pay District for Customer City's proportionate share of the capital cost of District's Long Term Control Plan ("LTCP") improvements.

7. On August 21, 2019, the Parties met and exchanged a preliminary list of LTCP improvements with estimated costs for which Customer City would be responsible. On May 10, 2022, District provided Customer City with a revised list of LTCP improvements with estimated costs which is provided in **Exhibit A**, not including interest and financing costs.

8. On January 7, 2020, District issued to Customer City a capital cost contribution notice for the remainder of Bond Issue (SP7) and Near-Term Headworks Improvement Project in

the amount of $2,022,252, which Customer City has not yet paid. These costs are identified as the Secondary Clarifier, Aeration Tank Diffusers, and Headworks on **Exhibit A**.

9. The cost-of-service study was completed on March 14, 2022, and District notified Customer City on May 10, 2022 that its new rate is $2.344/1,000 gallons for FY 2022, effective July 1, 2022. A copy of the May 10, 2022 notification is provided as **Exhibit B**. Per the District's and Customer City's request, the cost-of-service study calculated a return on investment which could be implemented under certain circumstances, under which Highland would be allocated approximately $848,000 per year.

10. On September 18, 2020, District submitted a LTCP for the control of Combined Sewer Overflows ("CSOs"), subject to United States Environmental Protection Agency ("EPA") and Indiana Department of Environmental Management ("IDEM") approval. On March 17, 2021, EPA and IDEM conditionally approved District's LTCP. A schematic of District's Selected Alternative for the LTCP is shown as **Exhibit C**.

11. On April 7, 2022, Customer City, EPA, and IDEM entered into a consent decree which was filed with the U.S. District Court for the Northern District of Indiana (the "SSO Consent Decree") requiring Customer City to construct improvements capable of sending an increased instantaneous maximum peak flow up to 32.2 MGD per day to District for treatment by August 31, 2027.

12. On May 8, 2017, District, EPA, and IDEM entered into a consent decree which was filed with the U.S. District Court for the Northern District of Indiana which required District to develop and implement an approved LTCP. On March 17, 2021, the USEPA issued partial approval of the District's LTCP, which proposed construction of improvements sufficient to increase its capacity to accept up to a 40 MGD maximum peak flow from Customer City for treatment, subject to final agreement with the Customer City and resolution of the Customer City's SSO plan with EPA and IDEM.

13. The LOI required Customer City pay District an expanded capacity operating charge of $255,000 per MGD for each additional MGD of instantaneous peak flow capacity required for Customer City to resolve its SSO issues, adjusted for inflation as necessary. As per the Customer City's SSO Consent Decree, the Customer City requires additional instantaneous max peak capacity of 25 MGD for a total instantaneous maximum peak flow of 32.2 MGD by August 31, 2027, which the District is willing to provide subject to the terms of this First Amendment.

14. The Parties now desire to amend the Agreement with this First Amendment consistent with the foregoing events and conditions.

COVENANTS

NOW, THEREFORE, in consideration of the recitals and other mutual obligations and promises of the Parties herein expressed, District and Customer City do agree as follows:

1. Section 4.E of the Agreement be added as set forth below:

4.E Notwithstanding Section 4.D, Customer City agrees to pay District $269,000.00 for each additional MGD of instantaneous peak flow capacity which represents $255,000.00 per MGD adjusted for inflation. Customer City shall pay District a total of $2,286,500 in twelve equal monthly installments of $190,541.67 for the right to transmit to District an additional 8.5 MGD for a new maximum instantaneous flow rate of 16 MGD, which shall become effective upon execution of this First Amendment. The initial monthly payment set forth in this paragraph shall be due 120 days following the last day of the month of execution of this First Amendment. This amount shall be in addition to all other amounts due to District pursuant to the Agreement, as amended by the First Amendment. In addition, upon completion of the Southeast Quadrant Projects under the District's LTCP improvements, Customer City shall pay a total of $4,357,800 for the right to transmit to District an additional 16.2 MGD of wastewater per day for a final total maximum instantaneous flow rate of 32.2 MGD, which amount shall be in addition to all other amounts due to District pursuant to the Agreement, as amended by the First Amendment. Upon completion of both the Southeast Quadrant Projects under District's LTCP improvements and Phase I of Customer City's remedial measures project under the SSO Consent Decree, Customer City's instantaneous max peak flow (32.2 MGD) shall be limited to 7.2 MGD at the 81st Street Pump Station and 25 MGD at the newly constructed 5th Street Pump Station. If maintained by Highland after completion of the Southeast Quadrant Projects, the existing 5th Street Pump Station shall be used for dry weather flows only and use for wet weather flow through shall be prohibited.

2. Section 6.A.1 of the Agreement be deleted in its entirety and substituted with the following:

6.A.1(a) Operation and Maintenance Costs.

i. Customer City shall pay for its proportionate use of the District's POTW and Transmission Facilities in a manner consistent with the findings presented in the March 14, 2022 cost-of-service study and the May 10, 2022 notice provided in Exhibit B. Subject to Section 6.A.1(a)(ii)-(iv), the Effective Rates for the Customer City shall be as follows:

FY 2023: $2.344/1,000 gallons

FY 2024: $2.484/1,000 gallons

FY 2025: $2.625/1,000 gallons

FY 2026: $2.767/1,000 gallons

ii The FY 2023 rates shall be retroactive to and effective as of January 1, 2023, with the initial monthly payment being due 120 days following the last day of the month of execution of the First Amendment. Customer City and District shall calculate a true-up amount for the time period of January 1, 2023 to the date of the initial monthly payment, and Customer City shall pay such true-up amount to District through twelve equal monthly installments, the first of which will be due 120 days following the last day of the month of execution of this First Amendment. After FY 2023 and through 2026, the Customer City rates shall increase in proportion to the yearly O&M budget established by District compared to the prior year, but in no event shall the rates exceed those set forth in Section 6.A.1(a)(i). District may implement rates up to the foregoing amounts at the same time it implements rate increases to its other wholesale customers, including customers served by District as provided for in the March 14, 2022 cost of service study.

iii. The foregoing rates include a return on investment of approximately $848,000 per year. In exchange for inclusion of such return, District shall provide to Customer City no later than March 1st of each year: (A) an annual accounting of actual revenue collected by customer class compared to anticipated revenues to be collected to cover the District's cost-of-service for the prior year as shown in the March 14, 2022 cost of service study and Table 2 of Exhibit B; (B) an annual accounting of actual operating costs incurred compared to the budgeted costs for the prior year as shown in the March 14, 2022 cost of service study and the most recent District budget; and (C) the District's budget, including O&M, capital expenditures and PILOT for the current year.

iv. The foregoing rates include recovery of funds to create a repair and replacement reserve for the District. The District agrees to provide Customer City no later than March 1st of each year, a yearly: (A) capital project plan; (B) plan to govern use of the repair and replacement reserve and (C) accounting of: (1) the monies collected from each of its customer classes and wholesale customers to fund the repair and replacement reserve; (2) monies spent from the repair and replacement reserve and an overview of the projects undertaken; and (3) the remaining balance of the repair and replacement reserve.

v. After FY 2026, Customer City's rates shall increase in proportion to the yearly O&M budget established by the District compared to the prior year until such time that an update to the March 14, 2022 cost-of-service study is conducted after completion of the Southeast Quadrant Projects under the District's LTCP for the purpose of evaluating and incorporating the cost-of-service for the Southeast Quadrant Projects and any associated POTW upgrades or infrastructure constructed pursuant to District's LTCP completed as of the date of the commencement of the study. The updated cost-of-service study shall be conducted by a third-party consultant mutually agreed upon by the parties, the cost of which will be shared on a pro rata basis by the District and its customer communities.

vi. The Customer City rates determined by the updated cost-of-service study in Section 6.A.1(a)(v) shall go into effect on January 1 of the year following finalization of the study.

vii. The parties shall reserve the right to have the cost-of-service study updated prior to the conditions set forth in Paragraph 6.A.1(a)(i) or (ii) for changed circumstances, as provided for in Exhibit C of the LOI.

3. **Capacity Certification.** If Customer City is in compliance with the Agreement, including current on all payments due to District pursuant to the Agreement and operating within the instantaneous maximum peak capacity limit, as amended by this First Amendment, District will in good faith review and, if satisfactory, approve capacity certifications for any construction permits submitted by Customer City attributable to its remedial measures project under the SSO Consent Decree with a capacity that allow Customer City to transmit no more than an instantaneous maximum peak flow of 32.2 MGD to the District. District will in good faith review and, if satisfactory, approve capacity certifications for any other construction permits submitted or approved by Customer City, including those submitted by private developers in Customer City's service territory, in the ordinary course. Any disputes regarding capacity certifications for construction permits submitted or approved by Customer City to District shall be resolved in the manner provided for under Section 10 of the Agreement.

4. **True Up**. Customer City agrees to pay District $35,000 monthly for a term of sixty-eight months in satisfaction of the terms set forth in Section 1(d) of the LOI, which totals $2,380,000. The foregoing amount reconciles the amount paid by Customer City as compared to the rate structure established in the March 14, 2022 cost-of-service study. The initial monthly payment set forth in this paragraph shall be due 120 days following the last day of the month of execution of this First Amendment.

5. **Payment for Completed Capital Projects.** Customer City agrees to pay District in equal monthly instalments over a 24-month period for a total of $2,022,252 for its share for the remainder of Bond Issue SP7 and Near-Term Headworks Improvement Project identified in **Exhibit A**. The initial monthly payment set forth in this paragraph shall be due 120 days following the last day of the month of execution of this First Amendment. Upon satisfaction of this provision, District shall waive any late penalties, interest, and financing costs owed by Customer City under the Agreement for these already completed capital projects.

6. **LTCP Costs.** Customer City shall deposit its allocated portion of the costs of each project under the LTCP provided in **Exhibit A** into an escrow account (the "Escrow Account") not later than the date the District awards a construction contract for each project. Upon receipt by the District of construction cost estimates from a qualified professional for a particular project, the District shall notify the Customer City of the maximum anticipated amount of the Customer City's required contribution for such project. The Customer City shall then have one hundred twenty (120) days in which to complete all authorizing actions for the issuance of its bonds (other than the actual sale thereof) to fund such contribution. The District shall schedule the receipt of construction bids to occur after such one hundred twenty (120) day period. Within thirty (30) days after the District receives construction bids for the project and

provides the Customer City with the Customer City's actual allocable share (which shall occur prior to the District's award of the construction contract for the project), Customer City shall sell and issue its bonds in an amount that generates net proceeds sufficient to fund its contribution and deposit such net proceeds into the Escrow Account. Customer City shall receive a pro rata credit for any reduction in the cost of LTCP projects in **Exhibit A**. If District receives grant funding for any portion of the LTCP projects in **Exhibit A**, Customer City shall receive a pro rata credit for the amount of the grant funding. After construction of each project provided for in **Exhibit A**, the District shall submit a notice to Customer City reconciling the estimated and actual construction costs of the project and indicate either a debit or credit from Customer City, which shall be paid by the Customer City or the District within 180 days of the notice.

7. This First Amendment does not amend any other provisions of the Agreement, including that the term of the Agreement shall be until December 31, 2043.

SANITARY DISTRICT OF THE
CITY OF HAMMOND, INDIANA

Marty T. Wielgos

Marty Wielgos,
Chief Executive Officer

ATTEST: Rachel Moon, Business Manager

DATE: 5/1/23

TOWN COUNCIL OF THE
TOWN OF HIGHLAND, INDIANA

_____
President

_____
Member

_____
Member

_____
Member

_____
Member

ATTEST:_____

DATE:_____

EXHIBIT A
Highland LTCP Capital Cost Allocations

Item	Construction Cost	Allocation	Estimated Date of First Construction Debt Service Payment	5th Street Pump Station Max Peak Capacity (MGD) 25
CMDF & UV[1]	$ 40,631,000	13.0%	5/1/2024	$ 5,282,030
Force Main[1]	$ 9,000,000	25%	5/1/2024	$ 2,228,725
Kennedy Ejector Pumps[1,9]	$ 1,136,988	0%	N/A	
LTCP Sub-Total	**$ 50,768,000**			**$ 7,510,000**
Secondary Clarifier[4]	$ 5,686,000	9.2%	Due[8]	$ 523,112
Aeration Tank Diffusers[4]	$ 1,995,000	9.2%	Due[8]	$ 183,540
Headworks[4]	$ 14,300,000	9.2%	Due[8]	$ 1,315,600
SSPS Upgrades[1,5]	$ 3,307,000	15.3%	Upon Completion of Design	$ 505,972
WWTP Upgrades[1,4]	$ 37,372,000	9.2%	Upon Completion of Design	$ 3,438,224
WWTP CMDF[1,6]	$ 44,093,000	6.0%	Upon Completion of Design	$ 2,645,580
Fine Screens[1,9,10]	$ 574,000	0.0%	N/A	$ -
Other Project Sub-Total	**$ 107,000,000**			**$ 8,612,028**
Total Capital Cost[3]	**$ 158,000,000**			**$ 16,122,028**
Capacity Charge[2]				$ 6,644,300
Total Cost[7]				**$ 22,770,000**

Notes:

1. Including 30% contingency & 15% engineering.
2. $269,000 per MGD for an additional 24.7 MGD for a total instantaneous max peak flow of 32.2 MGD
3. Total Capital Cost only includes projects listed above. There may be additional future capital projects.
4. WWTP project costs allocated as percentage of total annual pollutant load.
5. Percentage of peak flow pump as per Simulated Tracer Study.
6. WWTP CMDF costs allocated as percentage of peak wet weather flow reaching the WWTP as per Simulated Tracer Study.
7. Does not include interest and cost of finance.
8. Per January 7, 2020 letter RE: Capital Cost Cotnribution for Remainder of SP7 and Near Term Headworks Improvement Project.
9. Assumes all Highland wet weather flow will be conveyed to the CMDF.
10. Highland will need to fund their portion of the cost to screen flows to the CMDF.

EXHIBIT B

SANITARY DISTRICT of HAMMOND

5143 COLUMBIA AVENUE
HAMMOND, INDIANA 46327-1794
TELEPHONE (219) 853-6413
FAX (219) 853-6321

Board of Sanitary Commissioners

SAM DIMOPOLOS
MICHAEL DYE
HEATHER GARAY
MICHAEL R. HAWKINS SR.
OWANA MILLER

THOMAS MCDERMOTT JR.
Mayor

MARTY WIELGOS
Chief Executive Officer

RACHEL MONTES
Business Manager

JOSEPH P. ALLEGRETTI
Legal Counsel

May 10, 2022

Mr. Mark Knesek
Sanitary District Superintendent
3333 Ridge Road
Highland, Indiana 46319

RE: Notice of Cost-of-Service Rate and Return Payment

Dear Mr. Knesek:

As per the February 13, 2017 Binding Letter of Intent & Settlement Agreement (the "LOI") between the Town of Highland, Indiana ("Highland") and the Sanitary District of the City of Hammond ("HSD"), HSD hereby provides notice to Highland of the commencement of the cost-of-service rate established by the Cost-of-Service Study (the "COS Study") conducted by NewGen Strategies and Solutions ("NewGen") dated March 14, 2022.

Background

The LOI established an interim rate for Highland of $1.20/1,000 gallons plus a $7.69/month customer charge for wastewater treatment ("Interim Rate") that became effective on March 15, 2017. Section 2.b of the LOI further provides that, "Highland and HSD agree that future rates shall be set pursuant to a cost-of-service study conducted in accordance with the parameters provided by Exhibit C." According to the LOI, the Interim Rate shall apply "until the implementation of the rate structure established by the cost-of-service study, as provided in Section 2.b."

According to the LOI, "Upon implementation of the rate structure established by the cost-of-service study, the Parties shall reconcile the two rates by retroactively applying the rate structure established by the cost-of-service study to the charges incurred by Highland during the Interim Rate period. HSD shall then issue Highland within thirty (30) days a credit or debit for the difference, which shall be applied to Highland's future invoices in equal monthly installments over the same number of months that the Interim Rate was in effect or such other time agreed upon by the parties in writing."

COS Study Rate Details

The COS Study determined that Highland's rate to meet its remaining share of the wholesale cost of service revenue requirements for HSD for FY2022 is $2.344 per thousand gallons, which includes a "Return on Investment" as a non-owner of HSD's system. A summary of NewGen's analysis is provided as Attachment A.

Reconciliation of the Interim Rate and Cost-of-Service Rate

The Interim Rate will have been in effect since March 15, 2017. As per Section 1.d of the LOI, HSD will issue Highland within thirty (30) days a reconciliation of the interim rate and the rate structure established by the cost-of-service study during the Interim Rate period and issue Highland a credit or debit for the difference, to be paid in equal monthly installments over the same number of months that will be included on future invoices.

Timing of Rate Billing and Payment

Highland's cost-of-service rate for FY2022 will become effective on July 1, 2022. Highland will receive an invoice reflecting this rate on August 15, 2022, which will be payable upon receipt. Future invoices will also include a credit or debit installment detailed above.

Please contact Diana Hamilton at dhamilton@sycamoreadvisors.com or HSD's outside legal counsel at h.max.kelln@faegredrinker.com if you have any questions.

Regards,

Marty Wielgos

District Manager

CC: Robert Tweedle, Counsel for Highland Sanitary District

Bernie Zemen, Highland Town Council President

John Reed, Town of Highland Attorney

Joe Allegretti, Counsel for HSD (via e-mail)

Attachment A

Annual Wholesale Revenue Requirement

The following table shows the total wholesale revenue requirement forecast resulting from the wholesale cost of service study assuming that the phase-in increase of R&R Reserve contributions begins in FY 2023.

Table 1
Five-Year Wholesale Revenue Requirement Forecast

Category	FY 2020 Test Year	FY 2021 Forecast	FY 2022 Forecast	FY 2023 Forecast	FY 2024 Forecast	FY 2025 Forecast
Maintenance	$2,843,745	$2,936,127	$3,031,511	$3,129,994	$3,231,676	$3,336,661
Administration	$3,229,861	$3,334,787	$3,443,122	$3,554,976	$3,670,464	$3,789,703
Laboratory	$1,209,562	$1,248,857	$1,289,427	$1,331,316	$1,374,565	$1,419,220
Treatment	$7,382,153	$7,621,972	$7,869,581	$8,125,234	$8,389,193	$8,661,726
Pumping	$2,703,618	$2,791,448	$2,882,132	$2,975,762	$3,072,433	$3,172,245
Collection	$250,725	$258,870	$267,280	$275,963	$284,928	$294,184
GIS	$171,076	$176,634	$182,372	$188,296	$194,413	$200,729
Lease Payment	$1,150,000	$1,150,000	$1,150,000	$1,150,000	$1,150,000	$1,150,000
R&R Reserve	$600,000	$600,000	$600,000	$1,569,027	$2,538,054	$3,507,082
PILOT	$1,700,000	$2,052,553	$2,405,105	$2,757,658	$3,110,210	$3,462,763
Return	$0	$1,678,014	$1,678,014	$1,678,014	$1,678,014	$1,678,014
Total O&M RR	**$21,240,740**	**$23,849,261**	**$24,798,544**	**$26,736,240**	**$28,693,951**	**$30,672,327**
Less: Offsetting Revenues	($826,452)	($853,300)	($881,021)	($908,741)	($936,462)	($964,182)
Net O&M RR	**$20,414,288**	**$22,995,961**	**$23,917,523**	**$25,827,498**	**$27,757,489**	**$29,708,144**
% Change		*12.6%*	*4.0%*	*8.0%*	*7.5%*	*7.0%*

Table 2 shows a breakdown of annual wholesale revenue requirements to be collected from each customer community consistent with the forecast shown in Table 1 and the wholesale cost of service study's allocations.

Table 2
Wholesale Revenue Requirement Detail by Customer Community

	FY 2020 Test Year	FY 2021 Forecast	FY 2022 Forecast	FY 2023 Forecast	FY 2024 Forecast	FY 2025 Forecast
HSD						
Net O&M	$14,087,775	$14,546,738	$15,020,522	$15,515,272	$16,026,212	$16,553,988
Lease Payment	$955,003	$955,088	$955,166	$955,538	$955,860	$956,143
R&R Reserve	$498,262	$498,307	$498,347	$1,303,708	$2,109,587	$2,915,889
PILOT	$1,411,743	$1,704,669	$1,997,629	$2,291,344	$2,585,154	$2,879,041
Return	$0	$0	$0	$0	$0	$0
Retail Billing Costs	$83,548	$86,263	$89,065	$91,958	$94,946	$98,030
Total	**$17,036,332**	**$17,791,065**	**$18,560,729**	**$20,157,820**	**$21,771,759**	**$23,403,092**
Griffith						
Net O&M	$875,758	$903,811	$932,803	$961,313	$990,988	$1,021,829
Lease Payment	$59,367	$59,341	$59,318	$59,204	$59,106	$59,020
R&R Reserve	$30,974	$30,961	$30,948	$80,777	$130,447	$179,989
PILOT	$87,760	$105,914	$124,057	$141,970	$159,854	$177,715
Return	$0	$540,478	$540,478	$540,478	$540,478	$540,478
Total	**$1,053,859**	**$1,640,505**	**$1,687,603**	**$1,783,742**	**$1,880,874**	**$1,979,031**
Highland						
Net O&M	$1,580,377	$1,631,001	$1,683,319	$1,734,768	$1,788,319	$1,843,974
Lease Payment	$107,133	$107,086	$107,043	$106,839	$106,662	$106,506
R&R Reserve	$55,895	$55,871	$55,849	$145,768	$235,403	$324,805
PILOT	$158,370	$191,130	$223,870	$256,196	$288,470	$320,701
Return	$0	$848,862	$848,862	$848,862	$848,862	$848,862
Total	**$1,901,776**	**$2,833,950**	**$2,918,944**	**$3,092,434**	**$3,267,716**	**$3,444,849**
Whiting						
Net O&M	$420,378	$433,844	$447,760	$461,446	$475,690	$490,494
Lease Payment	$28,497	$28,485	$28,473	$28,419	$28,372	$28,331
R&R Reserve	$14,868	$14,862	$14,856	$38,774	$62,617	$86,398
PILOT	$42,126	$50,840	$59,549	$68,148	$76,733	$85,306
Return	$0	$288,674	$288,674	$288,674	$288,674	$288,674
Total	**$505,869**	**$816,704**	**$839,312**	**$885,460**	**$932,085**	**$979,202**

Cost of Service Rate Forecast

Table 3 shows the forecasted rate necessary to generate the revenue for each customer community to meet the wholesale cost of service revenue requirements shown in Table 2. Estimated volumes are shown in millions of gallons (MG) per year. Effective rates are per 1,000 gallons (kgal). Note that the rates in each year FY 2021 – FY 2025 are lower than shown in the cost of service study report due to the delay in phasing in the increase in R&R Reserve contributions.

Table 3
Cost of Service Rate Forecast

	FY 2020 Test Year	FY 2021 Forecast	FY 2022 Forecast	FY 2023 Forecast	FY 2024 Forecast	FY 2025 Forecast
HSD						
Revenue Requirement	$17,036,332	$17,791,065	$18,560,729	$20,157,820	$21,771,759	$23,403,092
Estimated Volume (MG)	11,650	11,650	11,650	11,650	11,650	11,650
Effective Rate per kgal	**$1.462**	**$1.527**	**$1.593**	**$1.730**	**$1.869**	**$2.009**
Griffith						
Revenue Requirement	$1,053,859	$1,640,505	$1,687,603	$1,783,742	$1,880,874	$1,979,031
Estimated Volume (MG)	905	905	905	905	905	905
Effective Rate per kgal	**$1.164**	**$1.812**	**$1.864**	**$1.970**	**$2.078**	**$2.186**
Highland						
Revenue Requirement	$1,901,776	$2,833,950	$2,918,944	$3,092,434	$3,267,716	$3,444,849
Estimated Volume (MG)	1,245	1,245	1,245	1,245	1,245	1,245
Effective Rate per kgal	**$1.527**	**$2.276**	**$2.344**	**$2.484**	**$2.625**	**$2.767**
Whiting						
Revenue Requirement	$505,869	$816,704	$839,312	$885,460	$932,085	$979,202
Estimated Volume (MG)	523	523	523	523	523	523
Effective Rate per kgal	**$0.966**	**$1.560**	**$1.604**	**$1.692**	**$1.781**	**$1.871**

EXHIBIT C

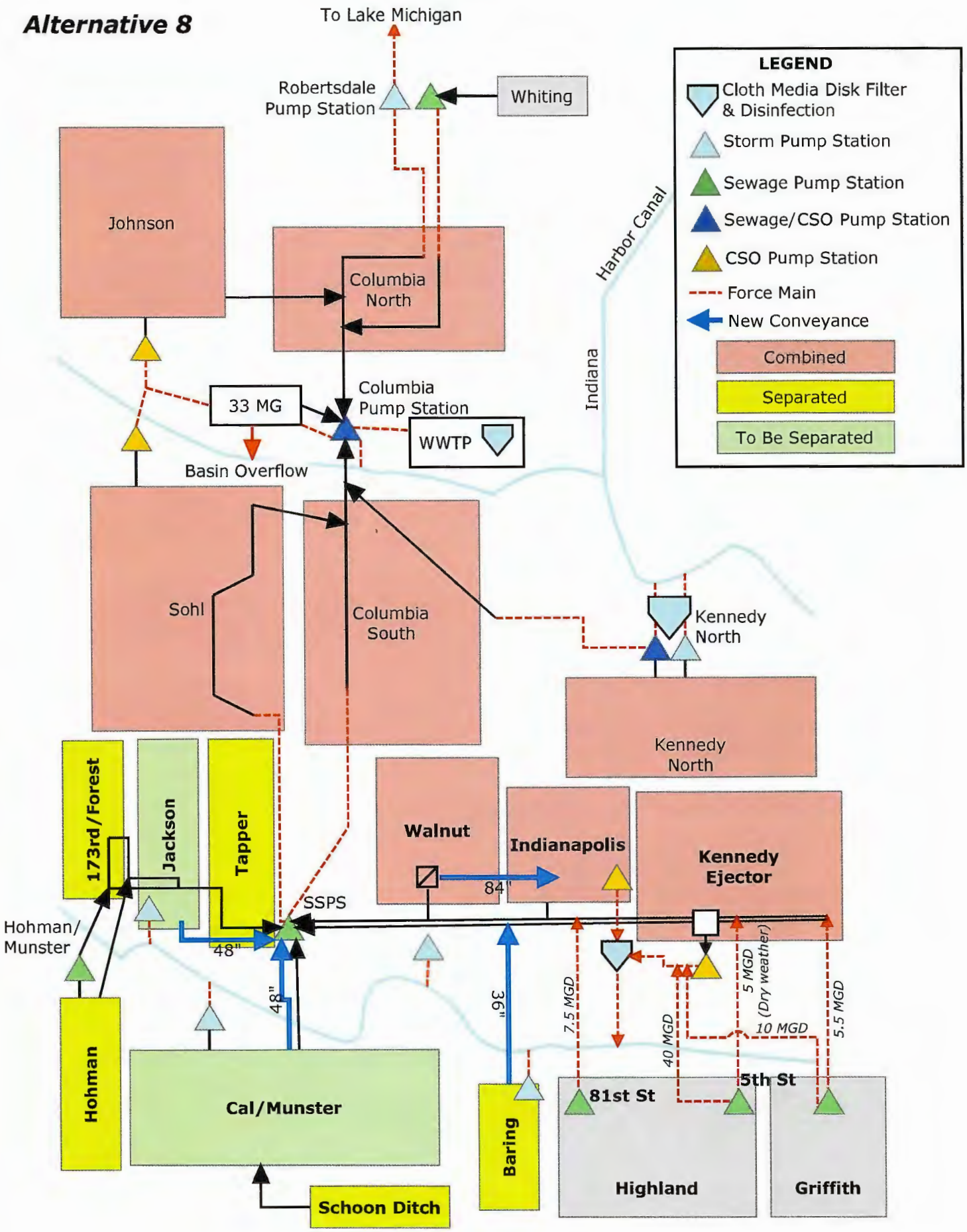
Alternative 8
To Lake Michigan
Robertsdale Pump Station
Whiting
LEGEND
Cloth Media Disk Filter & Disinfection
Storm Pump Station
Sewage Pump Station
Sewage/CSO Pump Station
CSO Pump Station
Force Main
New Conveyance
Combined
Separated
To Be Separated
Johnson
Columbia North
Harbor Canal
Indiana
33 MG
Columbia Pump Station
WWTP
Basin Overflow
Sohl
Columbia South
Kennedy North
Kennedy North
173rd/Forest
Jackson
Tapper
Walnut
Indianapolis
Kennedy Ejector
84"
SSPS
Hohman/ Munster
48"
48"
36"
7.5 MGD
40 MGD
5 MGD (Dry weather)
10 MGD
5.5 MGD
Hohman
Cal/Munster
Baring
81st St
5th St
Highland
Griffith
Schoon Ditch

ATTACHMENT L

MUNICIPAL EMPLOYEE HANDBOOK

March 2019; Revised June 2019; Revised March 2020; Revised February 2021

INCORPORATED TOWN OF HIGHLAND

LAKE COUNTY, INDIANA

MUNICIPAL EMPLOYEE HANDBOOK

Compensation and Benefits Ordinance

NEPOTISM POLICY found in Section 3.05, pages 12-13.

Adopted by the Highland Town Council as Ordinance No. 1378
Introduced December 10, 2007; Passed December 27, 2007
Revised 24 August 2009 by Ordinance No. 1432
Revised further June 25, 2012 by Ordinance No. 1513
Revised 26 November 2012 By Ordinance No. 1527
Revised 22 July 2013 by Enactment No. 2013-28.
Revised 11 November 2014 by Ordinance No. 1572
Revised 08 December 2014 by Ordinance No. 1576
Revised 22 December 2014 by Ordinance No. 1577
Revised 12 January 2015 by Ordinance No. 1580
Revised 28 December 2015 by Ordinance No. 1610
Revised 23 May 2016 by Ordinance No. 1615
Revised 24 April 2017 by Ordinance No. 1646
Revised 28 August 2017 by Ordinance No. 1653
Revised 11 December 2017 by Ordinance No. 1662
Revised 12 March 2018 by Ordinance No. 1671
Revised 26 March 2018 by Ordinance No. 1673
Revised 12 November 2018 by Ordinance No. 1689
Revised 26 November 2018 by Ordinance No. 1690
Revised 25 February 2019 by Ordinance No. 1696

Introduction *7*

Overview and History of Highland Municipal Government *8*

§ 1.00 EQUAL EMPLOYMENT OPPORTUNITY *13*

§ 1.01 Policy Statement 13

§ 1.02 Hiring Procedures 13

§ 1.03 Job Descriptions 13

§ 1.04 Reasonable Accommodation 13

§ 1.05 Pre-Employment Physical Examination 13

§ 1.06 Job Performance 14

§ 1.07 Performance Review 14

§ 2.00 EMPLOYEE CLASSIFICATIONS AND DEFINITIONS *14*

§ 2.01 Exempt Employees 14

§ 2.02 Non-Exempt Employees 14

§ 2.03 Probationary Employees 14

§ 2.04 Regular Full-Time Employees 15

§ 2.05 Regular Part-Time Employees 15

§ 2.06 Temporary Employees 15

§ 2.07 Job Sharing 15

§ 3.00 GENERAL EMPLOYMENT POLICIES *16*

§ 3.01 Handbook Updates 16

§ 3.02 Employment-At-Will 16

§ 3.03 Governing Board Notice and Approval of Hiring 16

§ 3.04 Elective Waiver of Benefits 16

§ 3.06 Attendance and Tardiness 18

§ 3.07 Use of Telephones and Computers 19

§ 3.08 Cooperation and Teamwork 19

§ 3.09 Code of Ethics and Values 19

§ 3.09.01 Honesty/Integrity 20
§ 3.09.02 Respect/Civility 20
§ 3.09.03 Accountability/Responsibility 20
§ 3.09.04 Fairness/Justice 20
§ 3.09.05 Inappropriate Ethical Behavior 21

§ 3.10 Political Activity 21

§ 3.11 Solicitation and Distribution 21

§ 3.12 References 21

§ 3.13 Personnel and Payroll Records; Personal Information Changes 21

§ 3.14 Appropriate Dress and Grooming 22
§ 3.15 Outside Employment 22
§ 3.16 Use of Municipal Property and Facilities 22
§ 3.17 Confidential Information 22
§ 3.18 Residency 23
§ 3.19 Seniority 23
§ 3.20 Bridging of Service 23
§ 3.21 Promotions 23
§ 3.22 Transfers 23
§ 3.23 Layoffs 24
§ 4.00 HOURS OF WORK AND COMPENSATION POLICIES 25
§ 4.01 Work Day and Work Week 25
§ 4.02 Overtime Work 25
§ 4.03 Work Schedules and Overtime Pay 25
§ 4.04 Longevity Pay 26
§ 4.05 Call-Out Pay 28
§ 4.06 Reporting Pay 28
§ 4.07 Minimum Wage 28
§ 4.08 Methodology for Computing Partial Pay for Salaried Employees 28
§ 4.09 Pay Day 29
§ 4.10 Payroll Deductions 29
§ 4.11 Pay for Temporarily Replacing another Employee at a Higher Grade Level 29
§ 4.12 Service Awards 30
§ 4.13 Day off with Pay for Commendations 30
§ 4.14 Severance Pay Upon Retirement 30
§ 4.15 Pay on Death of Active Employee 31
§ 5.00 EMPLOYMENT BENEFITS 32
§ 5.01 Sickness/Disability Leave 32
§ 5.01.01 Purpose 32
§ 5.01.02 Sickness/Disability Leave Schedule 32
§ 5.02 Vacation Leave 34
§ 5.02.09 Vacation Buy-Back Option 35
§ 5.02.10 Medical Disability Vacation Buy Back Option 35
§ 5.02.11 Scheduling of Vacations 35
§ 5.03 Personal Leave 36
§ 5.04 Use of Donated Leave 36

§ 5.05 Holidays 36

§ 5.06 Jury Duty/Witness Leave 37

§ 5.07 Bereavement Leave 37

§ 5.09 Uncompensated Leaves of Absence 38

§ 5.10 Family and Medical Leave 39
§ 5.10.01 Eligibility 39
§ 5.10.02 Medical Certification 39

§ 5.11 Special Administrative Leaves 40
§ 5.11.01 Special Administrative (non-disciplinary) Law Enforcement Leave 40
§ 5.11.02 Special Administrative Leave 41

§ 5.12 Public Employees' Retirement Fund Pension Plan 41

§ 5.13 Deferred Compensation Plans (IRS Section 457 Plans) 42

§ 5.14 1925 Police Officers' Pension Plan 42

§ 5.15 1977 Police Officers' and Firefighters' Pension Plan 42

§ 5.16 Deferred Retirement Option Plan for Police Officers 42

§ 5.17 Authorized Use of Town Owned and/or Leased Vehicles 43

§ 5.18 Use of Personal Vehicle for Public Business 44

§ 5.19 Police Department Clothing Allowance 45
§ 5.19.01 Incumbent Radio Operators and Sworn Officers 45
§ 5.19.02 Newly Hired Officers 45
§ 5.19.03 Motor Cycle Officers 45
§ 5.19.04 Part-time Support Services Clerks and the Animal Warden 45
§ 5.19.05 Special Programs 45

§ 5.20 Fire Department Allowances 46

§ 5.21 Clothing for Public Works Personnel 46

§ 5.22 Clothing for Parks and Recreation Personnel 46

§ 5.23 Educational Assistance 47

§ 5.24 Use of Mobile/Cellular Phones 47
§ 5.24.01 Approval of Transactions 48
§ 5.24.02 Criteria for Purchasing 48
§ 5.24.03 Incidental Personal Use 48
§ 5.24.04 Use Agreement 49
§ 5.24.06 Reimbursement for Business Use of Personal Cellular Phones 50
§ 5.24.07 Confidentiality 50
§ 5.24.08 Employee Discounts 50
§ 5.24.09 Use of a Mobile/Cellular Phones While Operating a Motor Vehicle 50
§ 5.24.10 Administration and Responsibilities 50

§ 5.25 Travel and Conferences 51
§ 5.25.01 Registration Fees 51
§ 5.25.02 Transportation 51
§ 5.25.03 Lodging 51
§ 5.25.04 Meals 52

§ 6.00 GROUP INSURANCE *52*

§ 6.01 Unemployment Compensation Insurance **52**

§ 6.02 Workers Compensation Insurance **52**

§ 6.03 Group Health Insurance **53**
§ 6.03.01 Town Council Member Eligibility 53
§ 6.03.02 IRC Section 125 "Flex Plan" 53

§ 6.03.03 Health Savings Accounts (HSA Accounts) *53*
§ 6.03.04 Employee Contribution for Certain Group Insurance Premiums 54
§ 6.03.05 Group Dental Insurance Plan 56
§ 6.03.06 Eligible Employees Defined 56
§ 6.03.07 Group Vision Insurance Plan 56

§ 6.04 Group Life, Accidental Death and Dismemberment Insurance **56**

§ 6.05 Insurance for Deceased Employee's Dependent Family **56**

§ 6.06 Extension of Insurance Plan Coverage for Terminated or Separating Employee **57**

§ 6.07 Insurance Plan for Retired and Separating "Public Safety" Employees **57**

(Amended by Ordinance No. 1646 24 April 2017) **58**

§ 6.08 Insurance Plan for Retired and Separating "Public" Employees **58**

§ 7.00 COMMUNICATIONS *61*

§ 7.01 Bulletin Boards **61**

§ 7.02 Resolving Employee Complaints **61**

§ 7.03 Complaint Procedure **61**

§ 8.00 EMPLOYEE CONDUCT AND DISCIPLINE *62*

§ 8.01 Work Rules **62**
§ 8.01.01 Authority for Leaves with pay during the pendency of investigations. 62

§ 8.02 Major Infractions **63**

§ 8.03 Minor Infractions **63**

§9.00 SPECIFIC EMPLOYMENT POLICIES *65*

§9.01 Non-Smoking Policy **65**

§9.02 Anti-Theft Policy **65**

§ 9.03.01 Sexual Harassment Prohibition **65**

§9.03.02 Prohibited Relationships among employees where there is direct supervision or control between the parties **65**

§ 9.04 Computer Use Policy **66**
§ 9.04.01 Acceptable Use Policy 66
§ 9.04.02 Internet 67
§ 9.04.03 Terms and Conditions of Computer Network Use 67

§ 9.05 Substance Abuse Policy **69**
§ 9.05.01 Drug and Alcohol Use 69
§ 9.05.02 Drug and Alcohol Policy for Commercial Drivers License (CDL) Drivers 70

§ 9.06 Workplace Safety Rules 74

Acknowledgement of Receipt **76**

Print Name: _____ ***76***

Introduction

This Handbook is promulgated by the Highland Town Council, which has authority to determine compensation and matters related to the administration of the Town's workforce. Your participation in the workforce of the Town of Highland is welcomed and commended. The workforce of the Town of Highland assists in the delivery of a diverse array of public services. Public safety services are provided by our Police and Fire Departments. The Public Works Department provides for the maintenance and improvement of streets, public ways, water, sanitary sewer, storm sewer and drainage systems; buildings, grounds and equipment maintenance; sanitation and waste disposal services. Culture and recreation services are provided by the Parks and Recreation Department. Development and redevelopment is managed by our Building, Inspection and Redevelopment Departments.

This Handbook has been prepared to provide employees with answers to questions that frequently arise regarding the Town's employment policies. It does not anticipate every situation that may arise. However, it does address the most common issues where questions have been raised in the past. If you have questions about this Handbook, contact your Department Head or the employment benefits clerk in the Office of the Clerk-Treasurer.

Ordinance No. 1053 adopted December 30, 1996 authorized the initial version of this Handbook. This update to the Handbook incorporates all amendments to Ordinance No. 1053 adopted prior to January 1, 2008. It excludes wages, rates of pay and related topics that may change year-to-year to focus exclusively upon employment benefits, personnel administration policies, procedures and rules pertaining to topics such as employee ethics, use of computers, cell phones, drug and alcohol, sexual harassment and workplace safety.

This Handbook replaces all prior Handbooks, employment polices and procedures. It not intended to nor does it serve as a contract for employment or benefits. The Town Council reserves the right to make changes in employment policies and practices that are necessary to ensure efficient operations. Any past or future written or verbal statements contrary or in addition to the policies outlined in this Handbook must be approved by the Town Council as an amendment to this Handbook to be valid.

While this Handbook is provided as general information for all employees of the Town of Highland, each department of the Town may adopt operating rules and personnel policies that are not specifically covered or that may be more prescriptive than those contained in this Handbook. Any conflicts between this Handbook and a departmental policy relating to compensation will be governed by this Handbook. This Handbook does not apply to Volunteer Firefighters for which there are separate departmental personnel policies.

Thanks for your service to the Town of Highland!

Town of Highland, Lake County, Indiana
Municipal Building
3333 Ridge Road
Highland, Indiana 46322-2089

Phone: (219) 838-1080
Fax: (219) 972-5097
Website: www.highland.in.gov • E-mail: **highland@highland.in.gov**

Overview and History of Highland Municipal Government

Highland was almost entirely wetlands before it was first settled in 1848. Only a high sand ridge, where Ridge Road presently exists, stood above water. Highland is often called one of the "Ridge Communities" because of the high ground that runs east-to-west through the northern part of town. The "Ridge" was once a beach front for Ice Age Lake Chicago, now Lake Michigan. The wetlands of the area were drained by the Spring Ditch, the Cady Marsh Ditch and the Hart Ditch in the late 19th century to enable agricultural use of the land.

The community did not significantly develop until the mid 20th century when agricultural uses began to give way to residential land uses to accommodate families whose wage earners were employed in northern Lake County industries. In the 1940's, Highland's population nearly doubled. In the 1950's the population exploded, growing from 5,878 to 16,284 by 1960. The town's economic base changed from agricultural to residential and commercial. The downtown area saw marked development and growth.

At the year 2000 census, the population of Highland was 23,546 in 9,925 housing units. Highland is the 8th largest municipality in Lake County and its population ranks 30th out of 567 municipalities in Indiana. The area within the town's boundaries consists of 6.9 square miles. The town is now an almost fully built-out community completely surrounded by other municipalities: Hammond on the north; Munster on the west; Schererville on the south and Griffith on the east.

The net assessed valuation of Highland in 2006 was $1.173 billion. The Public Works Department maintains 89 miles of roadway; 88 miles of water mains; 74 miles of sanitary sewer and 58 miles of storm sewer. There are 22 community and neighborhood parks consisting of 250 acres and 4 miles of bike trails maintained by the Parks and Recreation Department pursuant to a license granted by Northern Indiana Public Service Company (NIPSCO), the region's investor owned electric and gas utility. The Highland Police Department, one of 17 law enforcement agencies in Metropolitan Lake County, consists of 41 sworn officers and civilian staff dedicated to protect the quality of community life. Highland enjoys a Class 4 Rating from the Insurance Services Office, testimony to the knowledge, skill, ability, equipment and capability of its Fire Department and the quality of the community water storage and distribution system. Public schools in Highland are governed by the School Town of Highland, a political subdivision unit independent of the civil town.

Civil Town Government

The Town of Highland as a civil town government was incorporated on April 4, 1910. The original plat of survey contained approximately five square miles. The Town was initially governed by a three member Board of Trustees, an elected Town Marshal, elected Town Clerk and elected Town Treasurer. The Town Marshal became an appointed position after 1915. The Board of Trustees was expanded to five members after 1925. The offices of Clerk and Treasurer were combined into a single Clerk-Treasurer elected office after 1935. In 1990, the Board of Trustees was renamed the Town Council. In 2005, the Town Council voted to convert to a council-manager form of local government. This form was abandoned in 2008 in favor of a weak executive form, whereby most administrative powers and responsibilities are retained by the Town Council or the governing board of jurisdiction.

Although the state of Indiana has provided enabling authority for municipal government home rule, a town may govern its own affairs and provide services only if a state statute has <u>not</u> pre-empted authority for a town to assume a responsibility, provide a service and levy taxes, assessments, fees or user charges to underwrite the expenditures.

The Town Council is the legislative and fiscal authority for the Town and among other things is responsible for selecting a Council President, passing ordinances, resolutions and adopting the annual budget. The entire five member Town Council is elected on a partisan basis from five wards every four years by the voters of the whole town. The council members serve for a term of four years.

A President of the Town Council is elected by members of the council from its membership to serve as the chief executive officer of the municipality. By tradition, the Council President serves for a term of one year. The President presides at meeting of the Council and appoints persons to boards, commissions and committees when law indicates that is a responsibility of the municipal executive.

The Clerk-Treasurer is the clerk of the Town Council (the legislative body), the custodian of the town seal and the chief fiscal officer of the civil town and its executive departments (including the Parks and Recreation Department, the Sanitary District and the Municipal Water Utility). The voters of the whole town elect the Clerk-Treasurer on a partisan basis every four years to a four year term of office.

Metropolitan Police Department

The Highland Police Department was organized as a Town Marshal system until 1955, when the Town adopted the Town Board of Metropolitan Police Commissioners system, which requires participation in a special law enforcement pension system and governance by a Board of Metropolitan Police Commissioners. There are five members appointed to the Metropolitan Police Commission who serve staggered three-year terms of office. The Commission is responsible for the management and administration of the Police Department. The Commission is the appointment authority for the Police Chief, sworn and civilian members of the Police Department. Once hired, decisions to promote demote or discipline employees of the Police Department are exclusively vested in the Commission. The Commission promulgates rules, regulations, general and special orders for departmental operations through the Police Chief. The Police Chief is the executive head of the department. Appropriation and budgetary authority for departmental expenditures is retained by the Town Council.

Fire Department

The Highland Fire Department is made up of active firefighters, probationary firefighters, reserve members, a full-time Fire Chief and a part-time Secretary. A Personnel Committee prescribes volunteer firefighter standard operating procedures, personnel policies and rules. The Personnel Committee consists of three command officers and three representatives of the Firefighter's Association elected on an annual basis. Once appointed, decisions to promote demote or discipline volunteer firefighters are exclusively vested in the Personnel Committee. The Fire Chief is the executive head of the department. Subject to an employment agreement, the Fire Chief serves at the pleasure of the Town Council for an indefinite term of office. Appropriation and budgetary authority for departmental expenditures is retained by the Town Council.

Parks and Recreation Department

The Parks and Recreation Department had its origins in a Recreation Commission, formed in 1947 as a volunteer group to develop plans for play and programmed activity for playgrounds of schools and parks. In 1966, the Town Council established a Parks and Recreation Department as an executive department of the municipality under the direction of a Parks and Recreation Board. The Parks and Recreation Board consist of six persons: four members are appointed by the Council President to serve staggered four-year terms of office; one member is appointed by the School Board; another member is appointed by the Lake County Library Board. The Parks and Recreation Board is responsible for the management and administration of the Department. The Board is the appointment authority for the Superintendent of Parks & Recreation, who is the executive heard of the department. Once hired, decisions to promote demote or discipline employees of the Department are exclusively vested in the

Parks and Recreation Board. Appropriation and budgetary authority for departmental expenditures is retained by the Town Council.

Public Works Department (Agency)

The Public Works Department was established as the first executive department of the municipality. It has the responsibility for trash and yard waste collection; construction, operation and maintenance of streets, public ways, water, sanitary sewer, storm sewer and drainage systems; vehicular fleet equipment maintenance, buildings and grounds. Labor and equipment is pooled for departmental functions and managed by the Public Works Director and departmental supervisors. The Public Works Director is the executive head of the department. Subject to an employment agreement, the Public Works Director serves at the pleasure of the Town Council for an indefinite term of office. Except for water and sewer operations, appropriation and budgetary authority for departmental expenditures is retained by the Town Council acting as the "Board of Works".

Sanitary District

The municipal sanitary and storm sewer works was originally managed exclusively by the Town Board of Trustees as the Board of Works for the Town. This remained so until the establishment of the Highland Sanitary District and its Board of Sanitary Commissioners in 1970. The Board of Sanitary Commissioners consists of five members who serve staggered three-year terms of office. The Public Works Director is the executive head of the department acting as the Superintendent of the Sanitary District. Wastewater collected in sanitary sewers is pumped to the City of Hammond for wastewater treatment. Storm water is collected in storm sewers and drainage ditches and discharged to the Little Calumet River. The Board of Sanitary Commissioners has appropriation and budget authority for Sanitary District expenditures and, subject to statutory limits, the power to levy a property tax for operations and debt. The authority to alter sewer user charges is retained by the Town Council.

Department of Waterworks

The Highland Water & Power Company provided potable water to the Town pursuant to a lease and service contract that began May 1, 1912. In 1932, the Town created a water department managed by a superintendent under a board which consisted of two members of the Board of Trustees and the Town Marshal. In 1966, an Executive Board for the Water Department was established consisting of the President of the Town Trustees, another member of the Town Trustees, the Clerk-Treasurer, the Town Attorney, the Town Engineer and the Water Works Superintendent. In 1968, the Town dissolved the Water Works Executive Board and placed the water department under the exclusive control of the Board of Trustees. In 1972, the Town re-established the Department of Waterworks as an executive department and provided for its management by a Board of Waterworks, which consisted of two members of Town Board of Trustees, the Clerk-Treasurer, the Town Engineer and the Public Works Director.

In March of 1983, the Town established the current organizational arrangement for the municipal water utility pursuant to enabling authority of a new state statute. Presently, there is a Department of Waterworks under the control of a five-member Waterworks Board of Directors. The Directors serve staggered three-year terms of office. The department's executive is the Public Works Director, acting as the Superintendent of Waterworks. Potable water is purchased from the City of Hammond. The Waterworks Board of Directors has budget authority for departmental expenditures and, subject to statutory limits, the power to levy a property tax for debt. The authority to establish and alter water user charges is subject to approval by the Town Council.

Building & Inspection Department

The Building and Inspection Department provides staffing for the Plan Commission, the Board of Zoning Appeals and for the administration/enforcement of the town's building, flood plain management, property maintenance, nuisance, zoning, sign and subdivision control ordinances. Members of the Plan Commission who are elected or appointed officials or employees of the municipal government serve at the pleasure of the Town Council until a successor is appointed and qualified. The Building Commissioner is the executive head of the department. Subject to an employment agreement, the Building Commissioner serves at the pleasure of the Town Council for an indefinite term of office. Appropriation and budgetary authority for departmental expenditures is retained by the Town Council.

Economic Development & Redevelopment Department

The Redevelopment Department, re-established in 1994 is Highland's newest executive department. It consists of the Redevelopment Commission and such persons the Commission may employ. The Redevelopment Commission consists of five members appointed to a one year term of office; the Council President appoints three members; the Town Council appoints two members. A three member Economic Development Commission appointed by the Council President to three year staggered terms of office was created in 2007 to enhance the Town's ability to incur debt and offer tax abatement for projects that will retain and create jobs and eventually increase the assessed value of the Town. Subject to statutory limits, a property tax may be levied upon all territory within the corporate boundaries of the Town for redevelopment purposes. The Redevelopment Director is the executive head of the department. Subject to an employment agreement, the Redevelopment Director serves at the pleasure of the Redevelopment Commission for an indefinite term of office. Appropriation and budgetary authority for departmental expenditures is retained by the Town Council.

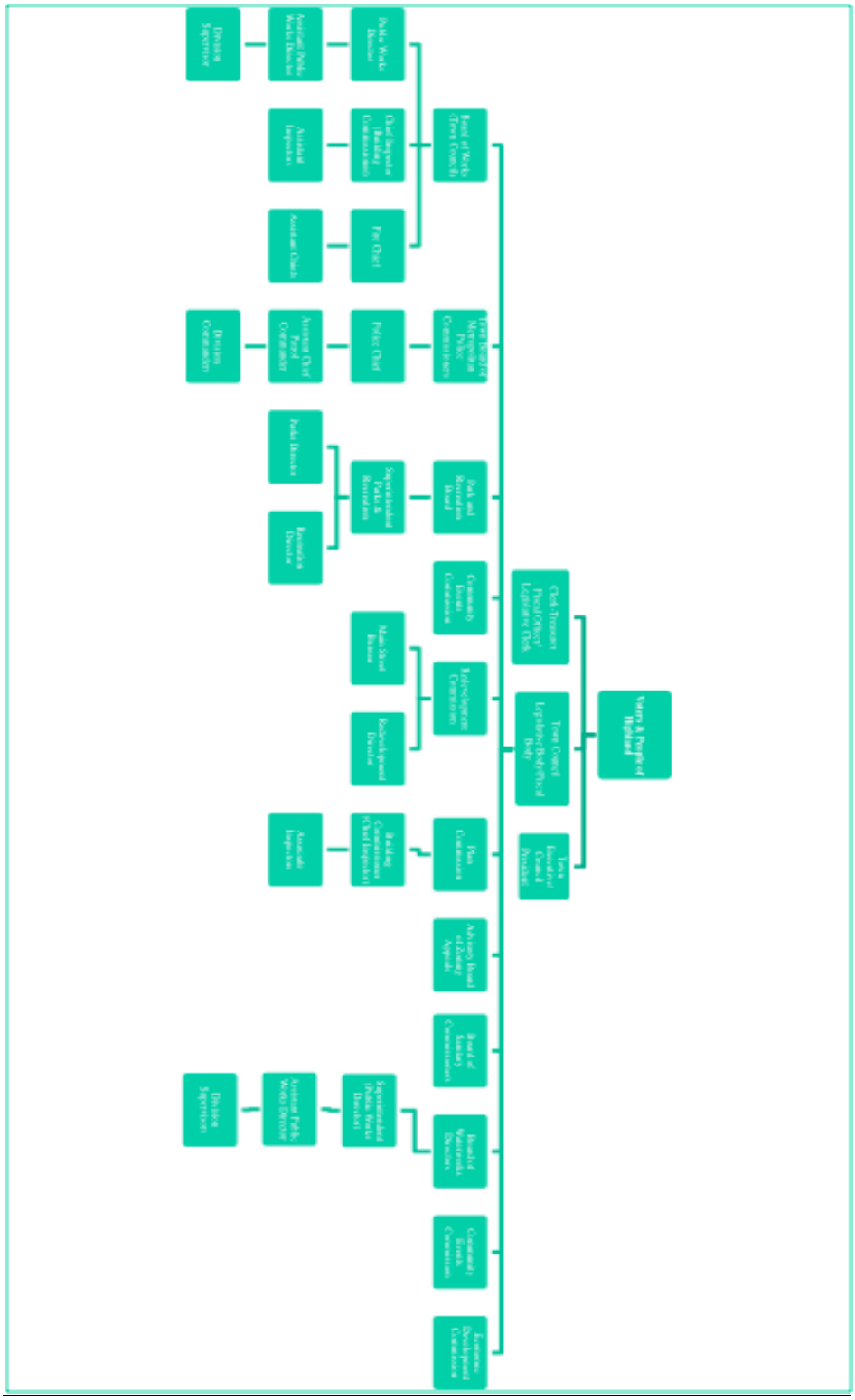

TOWN of HIGHLAND

§ 1.00 EQUAL EMPLOYMENT OPPORTUNITY

§ 1.01 Policy Statement

We are proud to be an equal opportunity employer. It is our policy to provide equal employment opportunities to all qualified employees and applicants for employment without regard to race, religion, color, sex, age, mental or physical disability unrelated to ability, national origin, marital status, veteran status or any other protected status consistent with applicable law. Our intent is to recruit and retain qualified employees through objective measures and qualifications, education, training and performance.

§ 1.02 Hiring Procedures

The Town of Highland has a common set of hiring procedures for all departments except the Police Department for which explicit hiring procedures are prescribed by state statute. For all departments, there is a written application required of applicants. The application forms contain the "equal employment opportunity statement" and a written authorization to investigate statements contained in the application. Criminal background and motor vehicle driving record investigations are required for applicants after an employment offer has been made for jobs for which Department Managers perceive a liability exposure and periodically thereafter with just cause. Sex offenders are identified on a web site that is accessible via a link from the Police Department's web page. All other criminal background investigations are performed by a state agency. It can take 30 days before the state agency completes a criminal background investigation.

§ 1.03 Job Descriptions

A job description has been developed for each position of the Town. The job description contains the minimum duties, essential functions, tasks, physical demands, occupational exposures and required qualifications of the position. Duties unique to a particular job may be assigned in addition to those prescribed by a generic job description used for position classification and compensation.

§ 1.04 Reasonable Accommodation

The Town will afford reasonable accommodation to qualified applicants and employees with a known mental or physical disability, unless to provide such accommodation creates an undue hardship on the Town's operations in performing an essential function of the job.

§ 1.05 Pre-Employment Physical Examination

A pre-employment physical examination (including a drug screen) is required for all full-time employees. If applying for a truck driving position or a position requiring the applicant to hold a Commercial Drivers License, please note the provisions in the Substance Abuse Policy, Section § 9.05 of this Handbook. Less than full disclosure is reason for denial of benefits and disciplinary action. In addition, the employee will acknowledge the extent of coverage in our benefit program and agree to its conditions. The employer shall pay for no less than one-half the cost of the baseline statewide physical and mental examination for police officer candidates as prescribed by IC 36-8-8-19(d).

§ 1.06 Job Performance

Any employee who believes that he/she is having difficulty in continuing to meet the performance requirements of the job due to a physical or mental disability is encouraged to advise their supervisor regarding the nature of the disability, the work limitations covered by the disability and any suggested reasonable accommodation. This information is confidential and will be used only to evaluate reasonable alternatives to permit you to perform the essential functions of the job in a safe and efficient manner.

§ 1.07 Performance Review

During your first year of employment with the Town, your job performance will be evaluated throughout the year as deemed necessary by your Supervisor and Department Manager. After receiving your one-year review, you will receive a performance review at least annually thereafter. At each of your reviews, your supervisor will discuss your progress with the Town, your accomplishments, your performance shortcomings (if any), your attendance, your safety record and your overall performance on the job.

§ 2.00 EMPLOYEE CLASSIFICATIONS AND DEFINITIONS

§ 2.01 Exempt Employees

Exempt employees refer**s to workers who are** exempt from certain provisions of the Fair Labor Standards Act pertaining to overtime. It also means that you are in a supervisory or professional position and not eligible for overtime payments for work in excess of 40 hours per week, **except as provided by this handbook.**

Exempt Salaried Positions

Director of Public Works	Ass't. Public Works Director
Water & Sewer Supervisor	Street Supervisor
Maintenance Supervisor	Facilities Supervisor
Building Commissioner/Chief Inspector	Deputy Clerk-Treasurer
Superintendent of Parks & Recreation	Park Director
Director of Recreation	Recreation Supervisor(s)
Metropolitan Police Division Commander(s)	Chief of Police
Metropolitan Police Ass't. Div. Commander(s)	Fire Chief
Metropolitan Police Administration Officer(s)	Redevelopment Director

§ 2.02 Non-Exempt Employees

Non-exempt employee status means that you are eligible for overtime payments for work in excess of 40 hours per week.

§ 2.03 Probationary Employees

There is a probationary period for new employees who are hired for employment for twelve (12) continuous calendar months from the date of hire. During this period you will have an opportunity to evaluate whether the work for which you were hired, the people with whom you work, the general atmosphere and the employment conditions meet your expectations. At the same time, we will evaluate your performance. The attitude and aptitude you show in your work habits during the

probationary period, in particular attendance, punctuality, your ability to learn and ability to get along with people, will be primary factors used in determining whether you will be assigned to regular employment status. The probationary period is meant to be an introductory period. You have no obligation to stay for the probationary period and the Town has no obligation to retain you as an employee for this entire period if, in our view, your performance or other business considerations warrant termination of your employment.

Evaluations may occur throughout the probationary period as deemed necessary by your supervisor and department head. At the end of the probationary period, your supervisor and department head will evaluate you and either (1) terminate your employment or (2) recommend you receive the designation as a regular full-time or regular part-time employee. In some circumstances and with your consent, your probationary period may be extended for a period of time not too exceed six months if not prohibited by law.

§ 2.04 Regular Full-Time Employees

Regular full-time employees are those salaried or hourly paid employees who are regularly scheduled to work at least 40 hours per week, who have been appointed for ongoing employment to a position **identified as "full-time"** as established in the Wage and Salary Ordinance and the annual budget and who have completed their probationary period. All probationary and regular full-time employees are eligible for benefits identified in this Handbook after the prescribed applicable waiting period.
(Amended by Enactment No. 2013-28 July 22, 2013)

§ 2.05 Regular Part-Time Employees

Regular part-time employees are those salaried or hourly paid employees who are hired with the understanding that they will regularly work less than **70** hours per pay period. Part-time employees are not eligible for employee benefits, except as set forth in this Handbook if they meet the eligibility requirements or as required by law, **subject to the legal requirements of the Affordable Health Care Act.** A part-time employee who becomes a full-time employee will have seniority and benefits based on the date the employee becomes full-time.
(Amended by Enactment No. 2013-28 July 22, 2013)

§ 2.06 Temporary Employees

Temporary employees are those salaried or hourly paid employees who are hired with the understanding that their tenure with the Town is for a fixed period of time. Temporary employees may work any number of hours including **forty (40) or more hours per week**. Temporary employees will not receive any benefits from the Town, except as required by law. A temporary employee who becomes a regular full-time employee will have seniority and benefits based on the date the employee becomes full-time.
(Amended by Enactment No. 2013-28 July 22, 2013)

§ 2.07 Job Sharing

The Town may allow two employees to share a full time equivalent (FTE) position authorized by the Salary Ordinance. In these circumstances, salary and benefits will be prorated between the employees, but the total expenditure for pay and benefits shall not exceed one FTE.

§ 3.00 GENERAL EMPLOYMENT POLICIES

§ 3.01 Handbook Updates

It is the responsibility of our employees to use common sense, sound judgment and to conscientiously perform your work duties while following our policies and management directives in the performance of your job. You should familiarize yourself with our employment policies and keep yourself abreast of changes in them. When new or revised sections of this Handbook are issued, you are responsible for inserting those sections in your copy of the Handbook, discarding sections that have been replaced and signing acknowledgement of receipt of new sections.

§ 3.02 Employment-At-Will

Full and part-time employment is for no definite term. This means that you and the Town have an "employment-at-will" relationship. In such a relationship you may end your employment with the Town at any time and the Town may do likewise. The Town does request that you give at least two week's notice prior to leaving. No written or oral promises have been made to employees regarding the length of their employment or the reason for which their employment can be terminated.

§ 3.03 Governing Board Notice and Approval of Hiring

No employee is authorized to commit the Town to an offer for full time employment until the appointment is approved by the governing board of jurisdiction. Subject to the provisions of I.C. 36-5-6 et seq. governing the Office of the Clerk-Treasurer, the provisions of IC 36-10-3-10 (4) & (5), IC 36-8-9-4, IC 36-9-25-10 (15), IC 36-7-14-12.2, IC 8-1.5-4-4 governing other boards or governing authorities of jurisdiction as well as such other ordinances that the Town Council may from time to time adopt regarding approved staffing levels, a full-time employee may not be hired unless the department head has the written approval of at least three (3) members of the governing board of jurisdiction.

Hiring of replacement part-time and temporary employees will be at the discretion of departmental directors but limited by staffing levels approved with the budget. Boards and Commissions of jurisdiction will be informed when the Council has declined to approve replacement employees. In addition and where applicable, the proper board of jurisdiction over a given department may make additional rules pursuant to law.

§ 3.04 Elective Waiver of Benefits

Any employee or elected officer of the municipality, may decline and waive any of the benefits conferred and set forth in the Compensation and Benefits Ordinance, provided such waiver be in writing, in a form approved by the Town Attorney, a copy of which shall be retained and placed on file with the municipality and that any such waiver may not be rescinded once executed without authorization and approval of the municipal legislative body.

§ 3.05 Nepotism and Employment

§ 3.05.01 All elected and appointed officials as well as employees of the Town of Highland are hereby directed to fully comply with the provisions of IC 36-1-20.2, which is adopted as the policy of the Town of Highland;

§ 3.05.02 Individuals who are relatives may not be employed by the Town of Highland, its executive departments, or utilities, in a position that results in one (1) relative being in the direct line of supervision of the other relative.

§ 3.05.03 For the purposes of this policy, "direct line of supervision" means an elected officer or employee who is in a position to affect the terms and conditions of another individual's employment, including making decisions about work assignments, compensation, grievances, advancement, or performance evaluation. The term does not include the responsibilities of the executive, legislative body, or fiscal body of a unit, as provided by law, to make decisions regarding salary ordinances, budgets, or personnel policies of the Town.

§ 3.05.04 (a) For the purposes of this policy, *"relative"* means any of the following:
(1) A spouse.
(2) A parent or stepparent.
(3) A child or stepchild.
(4) A brother, sister, stepbrother, or stepsister.
(5) A niece or nephew.
(6) An aunt or uncle.
(7) A daughter-in-law or son-in-law.
(b) For purposes of this section, an adopted child of an individual is treated as a natural child of the individual.
(c) For purposes of this section, the terms "brother" and "sister" include a brother or sister by the half blood.

§ 3.05.05 For the purposes of this policy, *"employed,"* means an individual who is employed by the Town of Highland on a full-time, part-time, temporary, intermittent, or hourly basis. The term does not include an individual who holds only an elected office. *The term includes an individual who is a party to an employment contract with the unit.*

§ 3.05.06 For the purposes of this policy, "member of the fire department" means the fire chief or a firefighter appointed to the department. The performance of the duties of a volunteer firefighter is not considered employment by the Town under the terms of this policy. Furthermore, "member of the police department" means the police chief or a police officer appointed to the department. ;

§ 3.05.07 *Exemption.* For the purposes of this policy, an individual who is employed by a unit on July 1, 2012, is not subject to this policy unless the individual has a break in employment with the Town of Highland. The following are not considered a break in employment with the unit: (1) The individual is absent from the workplace while on paid or unpaid leave, including vacation, sick, or family medical leave, or worker's compensation; and (2) The individual's employment with the Town of Highland is terminated followed by immediate reemployment by the unit, without loss of payroll time.

§ 3.05.08 An individual who is employed by the Town of Highland on the date an individual's relative begins serving a term of an elected office of the Town; and that individual is not subject to the exemption under Section 3.05.07, may remain employed by the Town of Highland and maintain the individual's position or rank even if the individual's employment would violate Section § 3.05.02 of this ordinance. However, that individual may not be promoted to a position if the new position would result in a violation of Section 3.05.02 of this ordinance.

§ 3.05.09 *Duties of Elected Officers.* Each elected officer of the Town shall annually certify in writing, subject to the penalties for perjury, that the officer has not violated Section § 3.05 and

IC 36-1-20.2. An officer shall submit the certification to the executive (Town Council President) of the Town not later than December 31 of each year. Furthermore, the annual report filed by the Town of Highland with the state board of accounts under IC 5-11-13-1 must include a statement by the executive (Town Council President) of the Town of Highland stating whether the unit has implemented a policy under this chapter.

Amended by Ordinance No. 1513 adopted June 26, 2012

§ 3.06 Attendance and Tardiness

You were very carefully screened, interviewed, and selected as a Town employee based upon many important factors. One such factor is attendance. We define proper attendance as: Being here on time, all day and every scheduled workday. While this is a simple definition, it also describes an ideal situation that is sometimes unattainable. Regular attendance is your individual responsibility. However, we will help you in any way possible to keep your attendance record untarnished. We all know that an occasional absence may be necessary. But, remember your absence does have a direct effect on the lives of other Town employees and citizens. As a result of excessive absenteeism, tardiness, and/or leaving early, disciplinary action may be required and will be based on frequency of occurrences in accordance with the following:

§ 3.06.01 Any day that an employee is absent or tardy is considered an occurrence for absenteeism purposes, although consecutive absences will be recorded as "one occurrence" regardless of the number of days of duration.

§ 3.06.02 If you agree to work overtime when asked, and then you fail to report for that overtime work, such absence will count as an absence occurrence. If you are excused, in advance, from scheduled overtime work, such absence will not count as an absence occurrence.

§ 3.06.03 Three (3) consecutive workdays of absence without notifying your Supervisor will be considered a voluntary termination.

§ 3.06.04 If you are absent from work because of illness for more than five (5) consecutive days, you must make application for a Medical Leave of Absence. If you are absent for three (3) consecutive days or more because of illness, you must bring a statement from your doctor releasing you to return to work. (Your attendance record will also directly affect your performance review.)

§ 3.06.05 Chronic Absenteeism. If an employee appears to be a chronic absentee, notice shall be given for the employee to be examined by our designated health facility and be given a health evaluation. If the health facility and the Department Manager agree that the employee is not physically capable of doing their job, appropriate action will be taken. Also, if an employee does not follow the prescribed medical facility recommendation of improved health, appropriate disciplinary action will be taken.

§ 3.06.06 Reporting of Absences and Tardiness. The Town does not hire more employees than needed to meet our citizen's needs. Because of this, any absence generally requires that department supervision make alternate plans and temporary changes to continue to meet requirements. When temporary changes are made, fellow employees become involved and generally perform work on which they are less familiar and less productive, and in many cases overtime is required. The following policy statement is intended to clarify the actions necessary to avoid undue hardship for other employees caused by your absence.

If you know in advance you are going to be late or absent from a scheduled shift, you are to advise your Supervisor at least one day before the start of the shift so that your position can be filled if

necessary. In the event there was no prior knowledge of absence or tardiness, you must notify your Supervisor or the Department Manager prior to the shift or as soon as possible. When reporting an absence, be sure to include:

(1) Name
(2) Department
(3) Name of Supervisor
(4) Reason for Absence
(5) Expected Date of Return
(6) Name of person talked to

§ 3.06.07 Absence records will be maintained for a consecutive 12-month period, starting with the employee's first occurrence of absence, tardiness, or lateness. All absence records and warning slips which are (1) year old or older shall not be considered for purposes of disciplinary action under this policy. However, you are reminded that a pattern of absences or tardiness, or habitual or chronic absenteeism or tardiness, regardless of your number of occurrences is grounds for disciplinary action up to and including termination.

Corrective discipline will be administered progressively according to the following:

(1) ORAL WARNING
(2) WRITTEN WARNING
(3) FINAL WRITTEN WARNING
(4) DISCHARGE

§ 3.07 Use of Telephones and Computers

Although we recognize that there will be times when personal phone calls or messages must be made or received during business hours, personal phone calls or e-mails (both incoming and outgoing) shall be kept to a minimum. This will enable us to keep our telephone lines and computer networks available for business. Make personal calls or e-mails and take care of personal business on your breaks or during your meal period.

§ 3.08 Cooperation and Teamwork

We believe that teamwork is the foundation of a successful employment relationship. As one member of our team, you can expect to be treated with courtesy and respect from the other members of the team. Likewise, you are expected to be cooperative, polite and positive in relations with co-workers, supervisors, the public and others you come into contact with through your employment. We strongly endorse cooperation and teamwork as independent job requirements and performance in these areas will be an integral part of the performance evaluation process.

§ 3.09 Code of Ethics and Values

The proper operation of the government of our town requires that all official representatives be effective, independent, objective and accountable to the people they serve. To ensure these qualities are upheld, we have adopted a Code of Ethics and Values to promote and maintain the highest standards of personal and professional conduct in our community. All elected and appointed officials, employees, volunteers and others who participate in our government are required to subscribe to this Code, understand how it applies to their specific responsibilities and practice these core values in their work. Because we value the public's confidence and trust in our services and its decision-makers, our

character and behaviors must meet the most demanding ethical standards and demonstrate the highest levels of achievement in following this code.

Our Values

§ 3.09.01 Honesty/Integrity

(A) To act with moral courage.
(B) To make decisions for the public's best interests, even when they may not be popular.
(C) To not engage in any business that would be – directly or indirectly – inconsistent with the conscientious performance of my public duties.
(D) To make no private promises of any kind that may unduly influence my public duties.
(E) To accept the responsibility to: (1) expose corrupt practices and/or behaviors and, (2) where empowered to do so, protect any public employee from retaliation who has exposed corrupt practices and/or behaviors.

§ 3.09.02 Respect/Civility

(A) To treat others as I would wish to be treated.
(B) To accomplish the goals and responsibilities of my individual position, while respecting my role as a member of a team and the community at large.
(C) To act in a professional and responsive manner.
(D) To work together in a spirit of tolerance and understanding.
(E) To work to build consensus and accommodate diverse opinions.
(F) To communicate effectively by listening carefully, asking questions and responding in a way that adds value to conversations.

§ 3.09.03 Accountability/Responsibility

(A) To not participate in any decision where I have a conflict of interest or from which my family, business and professional associates or I may personally benefit.
(B) To not use my position, public property or public resources for the personal benefit of myself, my family or my business and professional associates.
(C) To never solicit or accept any favor or benefit for my family, my business and professional associates or myself that might be construed as influencing the performance of my public duties.
(D) To make full public disclosure of the nature of any conflict of interest prior to any action taken.
(E) To avoid disclosing or abusing the information that I gain by virtue of my position for the personal benefit of myself, my family or businesses and professional associates.
(F) To not engage in direct competition with our neighboring communities while I am an employee, an appointed official or an elected official.
(G) To support the public's right to know the truth and encourage diverse and civil public debate in the decision-making process.

§ 3.09.04 Fairness/Justice

(A) To promote non-discrimination in my decision-making and to make decisions based upon the merits of the issue at hand.
(B) To recognize the function of government to serve the best interests of the citizens.
(C) To use my authority to promote the efficient and effective delivery of public services.
(D) To refrain from proposing services where adequate resources are not available.

(E) To work to remedy the imbalance where inadequate resources adversely affect the best interests of the citizens.

§ 3.09.05 Inappropriate Ethical Behavior

Behavior inconsistent with the values set forth in our Code of Ethics & Values may be redressed by the traditional instruments of governance including state law, ordinances, work rules and disciplinary procedures.

§ 3.10 Political Activity

No employee of the Town shall solicit any money, influence, service or thing of value or otherwise aid or promote any political committee or the nomination or election of any person to public office while on the job or during working hours. However, nothing in this section is intended to restrict the right of town employees from expressing their personal political views, to vote in any election or to support candidates or ballot issues as long as it is done outside of working hours.

§ 3.11 Solicitation and Distribution

Solicitation is verbal communication for the purpose of selling, political campaigning, organizing for civic activities or any other cause. Distribution is an exchange of printed materials such as handbills, letters and pamphlets for any sale, candidate or cause. Solicitation by an employee of another employee is prohibited while either the person doing the soliciting or the person being solicited is on working time. Solicitations must be limited to meal and break periods. Employees may not distribute literature for any purpose during working time or in work areas.

§ 3.12 References

Employees who leave our employment will be given the option of authorizing us to release information regarding their work performance, attendance, inter-personal relations, length of employment, position, pay rate and other job related information. When employees leave our employment without giving us written authorization to release more detailed information, we will as general practice release only information about their length of employment, position and pay rate. All reference requests should be directed to the Department Manager.

§ 3.13 Personnel and Payroll Records; Personal Information Changes

Your personnel file will be established upon your employment with the Town. Your file will include information and records relating to your pay, insurance benefits, attendance and other important state and federal laws. It is important that your personnel records be kept up to date. It is your responsibility to notify the Office of the Clerk-Treasurer in writing of any changes as they occur in personal status that can affect your income tax, insurance benefits and other important records. This includes the following:

(A) Address
(B) Telephone number
(C) Driver's License Number
(D) Marital status
(E) Military service status
(F) Births or deaths and increases or decreases in immediate family members
(G) Individual to contact in case of emergency
(H) Number of tax exemptions
(I) Beneficiary of insurance

(J) Change of legal name

§ 3.14 Appropriate Dress and Grooming

As an employee of the Town, you are a representative of the Town and a role model to the public. Although we do not have a formal dress code, you are required to be neatly groomed and to wear suitable clothing for your work environment, including approved uniforms as required by your Department.

§ 3.15 Outside Employment

We expect that your employment with the Town to be your major obligation. In order to avoid any misunderstandings or potential conflict of interests, any outside employment must be approved in advance by your Department Manager. Generally, we have no objection to employees holding other jobs or being self-employed as long as: you are able to meet the performance, attendance, overtime and other requirements of your job; your off-duty work activities do not constitute a conflict of interest, interfere or negatively reflect on the interests and reputation of the Town; and you do not engage in off duty work activities that directly compete with the Town or obligate the Town to overtime under FLSA requirements. During scheduled work hours, employees are required to conduct only the business of the Town.

§ 3.16 Use of Municipal Property and Facilities

Employees who operate vehicles owned by the Town will lock the vehicle when it is not occupied or otherwise secured in a facility that is locked down. The use of Town postage stamps or the postage meter for personal use is strictly prohibited. **Except as otherwise provided in Sections §5.17 et seq., §5.24.03 and § 5.24.04**, **u**se **of** Town tools, material, **facilities** or equipment for personal use **is prohibited.**

This prohibition does not prevent the use of facsimile or photo-coping machines provided the authorized fees for such uses are paid. Still further, this does not prohibit the use of personal properties that are otherwise made available to the public subject to a rental or user fee, provided the employee applies for the use as would any member of the public and pays the appropriate user fees. Further, this prohibition does not affect the reasonable use of telephones for personal use that does not adversely affect the performance of an employee's official duties or the functions of an employee's department.

If, for any reason, you leave our employment, you must return any property of the Town in your possession. These items should be returned not later than your last day of work.

(Amended 24 August 2009; Ordinance No. 1432)

§ 3.17 Confidential Information

In the course of your employment with the Town, you may have access to information which is confidential, including, but not limited to, information about new Town projects, accounting records, insurance records, personnel records and information about our citizens. You shall not use, disclose or divulge the confidential information of the Town or its citizens to any third party, without prior authorization.

§ 3.18 Residency

Employees are encouraged to live within the Town limits; however, residency will not be a condition of employment or continued employment.

§ 3.19 Seniority

Seniority means your length of continuous service with the Town from your most recent date of hire.

§ 3.20 Bridging of Service

§ 3.20.01 All service of previous town employment, will be bridged as continuous service after completing five (5) consecutive years service for longevity and vacation purposes only.

§ 3.20.02 For Police Department Pension purposes actual time of service will be the factor in gaining full pension rights on retirement.

§ 3.20.03 For elected Town Officials all previous and future Town employment or elected service will be bridged as continuous service immediately. This provision shall be construed pursuant to the provisions of IC 36-5-3-2.

§ 3.21 Promotions

Promotions are based on the belief that it is in the best interest of all of us to have the most qualified person on every job. It is our policy to fill vacancies whenever practical by promoting current, qualified employees who deserve such promotions. Various positions will be posted on the Town's bulletin boards for five workdays. If you want to be considered for the position, notify your supervisor. Promotions will be made on the basis of factors such as job performance, efficiency, training, knowledge, job qualifications, skills, ability and the supervisors' evaluation of the employees' potential abilities. To be eligible for promotion, an employee must meet minimum requirements of the higher-level position and must have a current satisfactory performance rating in the present position. **Final decisions whether to promote a current employee or to hire someone outside the organization resides solely with the Department Manager and, for some jobs, the governing board of jurisdiction.** A six (6) month trial period is required. After an employee accepts a promotion, the employee cannot return to the prior position unless the position is available.

§ 3.22 Transfers

It is our policy, where possible, to give employees the opportunity to transfer from one position to another and into different departments should they so desire and have the required skills and abilities. You may request a transfer to a position more to your liking by informing your supervisor of your desire. Your supervisor will keep a record of your request(s) for a transfer. Such request(s) will be reviewed when the opportunity arises and considered if it is practical in light of present or future conditions. A six (6) month trial period is required. After an employee accepts a transfer, the employee cannot return to the prior position unless the position is available. The Town reserves the right to temporarily transfer an employee to any position, in any department, when it is deemed to be in the best interest of the Town provided the employee being transferred meets the minimum qualifications for the position.

§ 3.23 Layoffs

§ 3.23.01 It is our desire to maintain a steady work force and we always strive to avoid layoffs. Although we hope this never happens, if budgets or income were reduced substantially, we might then be forced to decrease our work force. Altered priorities of governing boards, reorganization of work and services, lack of work, lack of funds or other reasons may affect our employment needs. In the event we decide it is necessary to eliminate or consolidate jobs or otherwise curtail staff, layoffs may be necessary. The decision as to which individuals to be laid off will be made by the governing board of jurisdiction. Employees will receive at least ten (10) working days notice of layoff.

§ 3.23.02 In the event the position from which the employee was laid off becomes available within twelve (12) months after the effective date of the layoff, the employee who was laid off will be offered the position provided the employee is in good standing with the most recent performance evaluation being satisfactory and if they accept the position within ten (10) days notice by the Town that the position is available. Notice of the position vacancy will be sent to the employee's last known address by certified mail, return receipt requested.

§ 4.00 HOURS OF WORK AND COMPENSATION POLICIES

§ 4.01 Work Day and Work Week

Your supervisor will tell you the starting and quitting time for your shift. Unpaid lunch periods are normally 30 to 60 minutes long. Most personnel will be expected to work a five (5) consecutive day work week. Employees are expected to work an actual eight (8) hours with the Town providing two (2) fifteen (15) minute breaks to be taken at the direction of each department manager. The fifteen (15) minute breaks shall include any necessary travel time. The lunch period shall be designated by each department manager. Personnel of the Police Department and the Parks & Recreation Departments may be assigned to different work day and work week schedules as described in Section § 4.03.

§ 4.02 Overtime Work

On occasion, we have to work overtime to satisfy our citizen's needs. Therefore, you are expected to work a reasonable amount of overtime when required. When overtime is necessary, you will receive as much advance notice as possible. If for some reason you are unable to work overtime, please discuss it with your supervisor. No overtime may be worked unless specifically authorized by your supervisor. Regular full time employees of the job will receive preference and an effort will be made to equalize such overtime among those able to perform the available work.

§ 4.03 Work Schedules and Overtime Pay

§ 4.03.01 All non-exempt, non-salaried employees will be paid time and one-half the regular rate of pay OR will receive compensatory time at one and one-half the time for all work performed in excess of forty (40) hours per week excluding Police Department personnel as hereinafter provided. For all full-time employees, holidays and vacation days will be counted as hours worked for purposes of calculating your overtime hours provided the vacation leave has been requested and approved at least 48 hours before the beginning of the work week. Other time off of work shall not count toward overtime. Overtime pay will be computed in fifteen-minute increments. **E**xempt salaried employees **may** receive overtime pay *or compensatory time off***.** *(Amended Ordinance 1577 Dec 22, 2014)*

§ 4.03.02 Except as provided in Section 4.03.03, with the approval of the department head, all salaried supervisory personnel exempt from the Fair Labor Standards Act may be scheduled and receive appropriate overtime pay or compensatory time off. Such pay will not be calculated at any time and one half premium but rather at the straight time hourly calculation of the particular worker's composite pay, unless otherwise provided in this handbook or the wage and salary ordinance.

§ 4.03.03 No department head may receive overtime pay or compensatory time off, without the express written permission of the President or Chair of the relevant Board of Jurisdiction.

§ 4.03.04 In all cases, when the overtime assignment involves a task or duty that is not part of the regular task or duty associated with the exempt supervisory worker, the rate of pay must authorized in an ordinance of the Town Council.

§ 4.03.05 Patrol Division Police Officers work on a twenty-four day work cycle beginning with the first day of the cycle on a 4 days on and 2 days off schedule with an 8.5 hour work day, 39.88 hour work week. Pursuant to the Fair Labor Standards Act (FLSA), the maximum number of hours to be worked prior to time and one-half compensation for overtime is 147 hours for the twenty-four day work cycle.

§ 4.03.06 Criminal Investigations Division Police Officers and officers assigned to administration and specialty positions (School Resource Officer, Technology & Training Officer, Support Services Administrator, etc.) work on a 5 days on 2 days off schedule with an 8 hour work day, 40 hour work week in a twenty-eight (28) day work cycle beginning on a Monday and ending on a Saturday of the twenty-eighth day of the cycle. No additional compensation will be given for the disparity between this schedule and the schedule for the Patrol Division.

§ 4.03.07 Criminal Investigations Division officers and other officers assigned to a twenty-eight day work cycle must work one hundred seventy-one (171) physical hours before being paid at time and one-half during the twenty-eight day cycle. Any overtime hours under one hundred seventy-two (172) will be paid at straight time. Straight-time (hour for hour) in the form of compensatory time or the employee's hourly rate of pay, will be given for overtime worked up to the FLSA maximums, at which the rate of payment will be one and one half time, in the form of compensatory time or the employee's hourly rate of pay, for those hours worked above the maximums as set forth in the FLSA overtime rules.

§ 4.03.08 Criminal Investigations Division (CID) officers may be assigned duties by the Chief of the Metropolitan Police Department in which the CID officer may be in coordinated schedule with Patrol Division. In such a case, the Criminal Investigations Division officers may be subject to the work cycle of the patrol division as directed by the Chief.

§ 4.03.09 An Officer who is on authorized assignment to a multi-agency Federal, State and Local Law Enforcement agency will work on a seven-day work cycle beginning with the first day of the seven-day workweek. Such an officer must work forty-three (43) physical hours before being paid at time and one-half during the seven-day cycle. Any overtime hours under forty-three (43) will be paid at straight time.

§ 4.03.10 Police Department **Lead Support Services Clerk, Support Services Clerks, Support Services Training Coordinator who** work a 40 hour work week and are eligible for overtime after 40 hours, subject to the same restrictions as other regular employees. They differ from other departmental civilian hourly employees only where holidays are concerned. Their holidays are scheduled rather than taken off on the holiday itself.

§ 4.03.11 The schedule for employees of the Parks and Recreation Department may deviate from a five (5) consecutive day work week to accommodate staffing needs for recreation programs and special events as directed by the Superintendent of Parks & Recreation, his or her designee.

§ 4.03.12 Regular full-time Town employees who are also members of the Highland Fire Department shall not be entitled to additional compensation when responding to fire or ambulance calls while on duty at their regular full-time position. When responding to emergency calls or participating in training outside of the normal workday, they shall be compensated at an hourly rate prescribed by the Wage and Salary Ordinance. When assigned to station work outside of the normal workday that is equivalent to work performed for the Town, they shall be compensated at hourly rates as required by the Fair Labor Standards Act.

§ 4.04 Longevity Pay

All regular full-time employees from all departments who have completed a specified consecutive number of years of service and who have not taken the elective waiver for this benefit will be paid a longevity benefit. Longevity pay will be combined with the regular hourly or bi-weekly rate of pay to create a composite rate of pay. This composite rate of pay will begin and increase, as scheduled beginning with the payroll period in which the associated pay date will be the first **full pay period** ~~pay~~

~~date of the month of~~ **following** the employee's service anniversary date. The composite rate shall be the base rate for the purposes of calculating any overtime premium where such premium applies. For the purposes of establishing the value of the longevity benefit for the purposes of IC 36-8 et seq., the annual longevity benefit will be unchanged. Effective from **2016**, the annual longevity benefit will be **$2,059.20** or 2,080 times the hourly longevity rate for 20 years. The composite rate for longevity shall be applied according to the following schedule:

Years of Service Completed	Current Hourly	Bi-weekly
1	$ 0.07	$ 5.60
2	$ 0.12	$ 9.60
3	$ 0.17	$ 13.60
4	**$ 0.22**	**$ 17.60**
5	$ 0.27	$ 21.60
6	$ 0.32	$ 25.60
7	**$ 0.37**	**$ 29.60**
8	$ 0.42	$ 33.60
9	$ 0.47	$ 37.60
10	**$ 0.52**	**$ 41.60**
11	$ 0.57	$ 45.60
12	$ 0.62	$ 49.60
Years of Service Completed	Current Hourly	Bi-weekly
13	**$ 0.67**	**$ 53.60**
14	$ 0.72	$ 57.60
15	$ 0.77	$ 61.60
16	**$ 0.82**	**$ 65.60**
17	$ 0.87	$ 69.60
18	**$ 0.92**	**$ 73.60**
19	$ 0.97	$ 77.60
20	**$ 0.99**	**$ 79.20**
21	$ 1.07	$ 85.60
22	**$ 1.12**	**$ 89.60**
23	$ 1.16	$ 92.80
24	$ 1.18	$ 94.40
25	$ 1.20	$ 96.00
26	$ 1.22	$ 97.60
27	$ 1.24	$ 99.20
28	$ 1.26	$ 100.80
29	$ 1.28	$ 102.40
30	$ 1.30	$ 104.00

Elected Officials who have completed a specified number of years of service, and who have not taken the elective waiver for this benefit will be paid a longevity benefit according to the following schedule:

Completion of 4 consecutive years	$ 10 per month
Completion of 7 consecutive years	$ 30 per month
Completion of 10 consecutive years	$ 40 per month
Completion of 13 consecutive years	$ 50 per month
Completion of 16 consecutive years	$ 60 per month
Completion of 18 consecutive years	$ 70 per month
Completion of 20 consecutive years	$ 85 per month
Completion of 22 consecutive years	$100 per month

§ 4.05 Call-Out Pay

Callout time for full-time and non-salaried employees will be paid at the rate of one and one-half their regular rate. This rate is paid until the job is complete or the start of the next regularly scheduled shift. You will be guaranteed at least two (2) hours of pay.

§ 4.06 Reporting Pay

If you report to work on a scheduled shift, without having proper notice NOT to report, you will be given two (2) hours work or, if no work is available, you will be paid two (2) hours at regular pay. We may assign you to any available job that you are capable of performing. If you refuse the work, no reporting pay will be awarded. This arrangement does not apply in the event of fires, storms, snow or sleet, tornadoes, power outages, gas supply stops, strikes, or other causes beyond the control of the Town that may interfere with work being provided. You are requested to inquire through public announcements and broadcasting sources the seriousness of the natural disaster as it affects each employee. In the event that it appears severe, you should contact the Town to confirm the operating schedule for that day. If you are absent from work on the previous scheduled workday, benefits of this provision are not applicable.

§ 4.07 Minimum Wage

All employees of the Town must be paid at least the minimum hourly rate set by the Federal and State Governments. All pay should be consistent with the most recently enacted Wage and Salary Ordinance.

§ 4.08 Methodology for Computing Partial Pay for Salaried Employees

This protocol will be used for calculating partial or pro-rata pay for salaried employees:

§ 4.08.01 In order to determine a daily rate of pay, divide the bi-weekly salary by ten (10).

§ 4.08.02 In order to determine an hourly rate of pay, divide the bi-weekly salary by eighty (80).

§ 4.08.03 This calculation protocol shall not be construed to abridge or alter the fourteen-day pay period. This calculation protocol shall not be construed to abridge or alter the special provisions for determining overtime pay for law enforcement officers.

§ 4.09 Pay Day

§ 4.09.01 All probationary, regular full-time, regular part-time and temporary employees as well as the Clerk-Treasurer shall be paid bi-weekly in a manner **set pursuant to IC 36-5-6-6**.

§ 4.09.02 Beginning with the March 14, 2008 pay day, employees shall only be paid by direct deposit to a checking or savings account as identified by the employee.

§ 4.09.03 For those payees mentioned in the foregoing subsection §4.09.01, the pay period is hereby defined as bi-weekly. The bi-weekly term for such pay represents the fourteen (14) day period, commencing at 12:01 a.m. Sunday and extending to and concluding on Midnight of the second following Saturday, immediately preceding the week of the scheduled payday. If a payday falls on a holiday, your payday is then to be determined by the Clerk-Treasurer.

§ 4.09.04 All elected and appointed officers as well as paid-on-call members of the Highland Fire Department shall be paid according to a frequency fixed by state law and ordinance and in a manner **set pursuant to IC 36-5-6-6**.

§ 4.09.05 All pension or survivors beneficiaries of the 1925 Police Pension Fund, who are receiving a recurring or on-going benefit shall be paid by direct deposit to be deposited by monthly to the proper savings or draw account as identified by the fund beneficiary. However, benefits outlined in IC 36-8-6-9.8 and IC 36-6-8-20 may be paid in any lawful manner including direct deposit at the option of the beneficiary.

§ 4.09.06 If there is any question concerning your salary or wages, please notify your supervisor as soon as possible to take steps to correct any errors or make adjustments. There will be no advances of wages as it is prohibited under Indiana law. (IC 5-7-3-1.)

§ 4.09.07 Nothing in this Handbook shall be construed to be in derogation of the provisions of **IC 36-5-6-6(a)(4).**

§ 4.10 Payroll Deductions

The law requires that we make certain deductions from your paycheck for federal income tax, state income tax, Social Security, any other applicable taxes and court orders. These deductions will vary depending upon how much you earn and how many dependents you have. This is another good reason for you to report any change in marital status or number of dependents to the Office of the Clerk-Treasurer immediately. You may request a payroll deduction for other purposes upon a written request to the Office of the Clerk-Treasurer. Except where expressly indicated otherwise, no deduction, other than those named above, will be made from your check without your consent. If you have any questions about any deductions, do not hesitate to ask your supervisor.

§ 4.11 Pay for Temporarily Replacing another Employee at a Higher Grade Level

If a regular full time employee is assigned to temporarily replace another employee at a higher grade-level for an extended period of time, that employee will begin to receive a greater rate of pay after completing thirty (30) calendar days in that position. ***The actual rate will be subject to approval by the Town Council.*** All other benefits remain the same.

§ 4.12 Service Awards

Service awards will be made to regular full-time employees, regular part-time employees (scheduled to work 15 hours or more per week), Fire Department employees and Volunteers in Police Service (VIPS) for the completion of each five (5) years of service to the Town. The annual recognition to the recipients will be at a time each year determined by the Town Council or at time of separation.

5 years of service	$ 20.00
10 years of service	$ 40.00
15 years of service	$ 50.00
20 years of service	$ 60.00
25 years of service	$ 70.00
30 years of service	$ 80.00
35 years of service	$ 90.00
40 years of service	$100.00
45 years of service	$110.00
50 years of service	$120.00

§ 4.13 Day off with Pay for Commendations

Departmental Managers and the Clerk-Treasurer may award a single day off with pay in consequence of a written letter of commendation for exemplary public service on approval by the governing board of jurisdiction **and the Town Council.**

§ 4.14 Severance Pay Upon Retirement

§ 4.14.01 All regular full-time employees *hired before January 1, 1998* who have completed at least ten (10) years of full-time continuous employment and who have attained 62 years of age, shall be entitled to receive severance pay based upon their last straight time pay period, exclusive of reductions due to disability compensation, upon retirement as follows:

YEARS OF SERVICE	AMOUNT OF SEVERANCE PAY
10 years	Two (2) weeks
15 years	Three (3) weeks

§ 4.14.02 All regular full-time employees *regardless of date of hire* who have completed at least ten (10) years of full-time continuous employment shall be entitled to receive severance pay based upon their last straight time pay period, exclusive of reductions due to disability compensation, **upon retirement as follows**:

YEARS OF SERVICE	AMOUNT OF SEVERANCE PAY
20 years	four (4) weeks

§ 4.14.03 Each regular full-time employee who is entitled to receive severance pay pursuant to this section must have completed the requisite period of time employed full-time by the Town and cannot apply his or her weeks of severance pay or compensatory time towards that requisite period of time

employed by the Town. For example, a full-time employee of the Town of Highland is not entitled to severance pay if in fact said employee completes nine (9) years and fifty (50) weeks of service and the attempts to apply his two (2) weeks of severance pay towards the ten (10) year requisite period of time making that employee eligible for said severance pay. In order to so qualify and be entitled to the two (2) weeks severance pay, said employee must have completed ten (10) actual years of employment with the Town. The only exceptions to this general rule are the police officers covered by the 1925 pension plan. These details are outlined in Ordinance 876Q2 passed and adopted May 5, 1989.

§ 4.14.04 A retired employee will be paid for vacation time earned and not taken and will be paid for holiday days if they fall in the period of the vacation and sick time period. Police Radio Operators and Sworn Personnel should abide by Police Department Regulations. Compensatory time cannot be used to extend termination date and/or benefits. All employment based on compensation of a specific period to draw a service pension will be adhered to without consideration of compensatory time as an element of service time toward the service pension. The clothing allowance for each quarter is allowed if the quarter payment falls in the vacation and personal pay period.

§ 4.15 Pay on Death of Active Employee

Pay will cease on the day of death. If vacation leave has been paid in advance all monies shall be returned or credited to the accumulated vacation time coming. Vacation time and personal days not taken and to which the party is entitled can be paid. Any holidays falling in the period of the extended time (vacation) will be paid. All over-time will be paid at time and one-half, but will not be credited to the calendar for holiday credit. Such payment will be made to the same person who is entitled to receive unpaid wages.

§ 5.00 EMPLOYMENT BENEFITS

§ 5.01 Sickness/Disability Leave

§ 5.01.01 Purpose

The Town provides a generous Disability and Worker's Compensation Benefit to provide wage continuation for those employees who may become injured or ill because the health and well-being of our employees is important to us. Since we endeavor to hire the finest possible employees, we believe it is in the best interest of both the employee and the Town to protect the health of all personnel. The purpose of Sickness/Disability Leave is to provide salary continuation for salaried and hourly full-time employees who are unable to work because of disability as a result of injury or illness. This benefit shall be in force after three (3) consecutive sick days and after the employee has obtained a doctor's or attending physician's report. Council approval expressed by the written signature of Town Council President is mandatory for payments to be made. The first three (3) days of sickness/disability, before Sickness/Disability Leave begins, are charged to accrued personal leave, vacation leave or compensatory time. The first three days are unpaid if accrued leave is not available. Sickness/Disability Leave is supplemental to the disability benefit provided by workers compensation insurance for a job-related injury or sickness. Workers compensation insurance payments will be supplemented to bring them to the level of pay at time of disability for a maximum **period described in Section 6.02.**

§ 5.01.02 Sickness/Disability Leave Schedule

(A) Notice is given that employees hired January 1, 2009 and thereafter may be provided a uniform disability benefit without regard to longevity of employment to be prescribed by a subsequent amendment to this Handbook.

(B) Regular full-time employees hired prior to January 1, 2009 unable to work because of disability may be paid for each separate illness as defined herein up to the maximum of the following:

Length of Continuous Service	Weeks at 100% of Full Pay	Weeks at 60% of Full Pay	Weeks of Protection
1 year but less than 5 yrs.	4	8	12
5 years but less than10 yrs.	8	8	16
10 years but less than15 yrs	10	10	20
15 years but less than 20 yrs.	13	13	26
20 years but less than 25 yrs	16	16	32
25 years and over	20	20	40

(C) Length of continuous service as used in the foregoing schedule refers to the total length of service the employee has completed, dating from his last date of hire to the beginning of each absence.

(D) Rate of Pay

(1) Full pay is considered to be the greater of the base salary that the employee received at the start of absence; or the average of the total earnings, excluding overtime and annual bonuses computed over the calendar year quarter immediately preceding the absence.

(2) Any scheduled increases, such as general increases or merit increases or any general decreases will be applied to the salary of an employee upon return from sick leave.

(E) Number of Illness Covered

The entire sickness disability allowance may be granted for each separate illness. Two periods of absence are considered separate illnesses if the employee has worked for at least 26 weeks in the interim. Two or more periods of absence each lasting a week or longer which are not separated by 26 weeks of active employment are considered to be the same illness unless, in the written opinion of a licensed doctor, they are due to clearly different causes.

(F) Types of Illness Covered

Sick leave will be granted for any disability, including child birth, that prevents the employee from performing his/her regular job. This includes mental illness and operations performed at the election of the employee as well as disease and accidents.

(G) Evaluation and Review Procedures

(1) After the initial two-week sick leave, the attending physician will report on forms provided by the Town (a "Disability Update Certificate") on the condition of the patient each 30 days during the remainder of illness or sick leave time. Department Managers may have the report of the employee and/or the employee evaluated at their discretion by a physician selected by the Town independent of the attending physician at Town expense who will verify the illness and certify the continuance of the disability or recommend a return to work. If the employee is a department head, the president of the relevant board of jurisdiction will have the report of the department head evaluated at their discretion by a physician independent of the attending physician who will verify the illness and certify the continuance of the disability or recommend a return to work. If an employee refuses the verification process, sick leave benefits will terminate upon formal notification.

(2) In addition to the "Disability Update Certificate", the employee will have his/her physician complete an Abridged (Light) Duty Form indicating the employee's ability or inability to work in an abridged duty capacity.

(H) Notification of Sick Leave

Where possible, consultation with the Department Manager and Town Council President must precede placement of employee on Sick Leave. Notification of sick leave commencement and expected duration should be made in writing by the employee to the Town Council President and the Department Manager. It is the responsibility of the Department Manager to inform an employee placed on Sick Leave of the appropriate benefits from the Sick Leave Schedule.

(I) Abuse of the Sickness/Disability Leave Benefit

Although we know the majority of employees will use these benefits for the purpose intended, we also know that possibility of abuse exists. In order to protect these benefits for all personnel, incidents

of abuse will result in disciplinary action, which may include the loss of pay to termination of employment.

(1) Employees are to use their time on disability to heal. An employee granted sickness/disability leave is expected to avoid activities that might delay their convalescence or cause for further injuries. If you are unable to work due to illness or injury under normal circumstances you will not be authorized to travel for long distances or perform job functions at home or another place of employment. While extenuating circumstances are possible, we expect employees to use common sense and seek prior approval from their Department Managers before traveling or performing any task that might be construed as inappropriate.

(2) When abuse of the benefit is suspected, the Department Manager may authorize an investigation and/or surveillance to determine compliance with this section. The Department Manager may consider reports of a physician selected by the Town independent of the attending physician and other evidence in determining whether there is just cause for disciplinary action.

§ 5.02 Vacation Leave

We believe that you should have a time of rest and relaxation each year. Vacation with pay (straight time base rate and any longevity) is one of the ways we show our appreciation for your length of service and productive efforts. Regular full time employees receive vacation leave at rates from 10 days to 25 days per year based upon the number of years of service. Vacation leave is accrued each year and available to employees in the following year. Accumulated vacation leave is paid to employees upon separation of employment. Vacation days must be approved by your supervisor in advance of your vacation.

§ 5.02.01 A full-time employee becomes eligible for vacation after completing one (1) year of employment. The vacation year is the calendar year. Beginning with January 1 of the calendar year following the year in which you reach your one-year anniversary, you will be eligible for ten (10) days of vacation. Your vacation allotment during the calendar year you have your one (1) year anniversary will be in accordance with the following schedule:

Month of Hire	Entitled To
January	10 Days Vacation
February	10 Days Vacation
March	9 Days Vacation
April	8 Days Vacation
May	7 Days Vacation
June	6 Days Vacation
July	5 Days Vacation
August	4 Days Vacation
September	3 Days Vacation
October	2 Days Vacation
November	1 Day Vacation
December	0 Days Vacation

§ 5.02.02 All full-time employees beginning with January 1 in the calendar year in which you celebrate five (5) years of continuous service you will receive fifteen (15) days vacation. Beginning with January 1 in the calendar year in which you celebrate ten (10) years of continuous service you will receive twenty (20) days vacation. Beginning with January 1 in the calendar year in which you celebrate twenty (20) years of continuous service you will receive twenty-five (25) days vacation.

§ 5.02.03 Full-time employees may elect to carry over up to one week of vacation into the following year. The vacation must be taken by December 31st of the year into which it is carried over.

§ 5.02.04 When a holiday occurs during your vacation, you may add an extra day to the beginning or end of such scheduled vacation or may take the extra day(s) at a later date.

§ 5.02.05 Vacations must be scheduled in advance with your supervisor. Vacations should be scheduled in five-day increments. However, WITH THE APPROVAL OF THE DEPARTMENT HEAD you may designate some or all of your annual vacation allotment as "Vacation Days at a Time", which may be taken in one day increments. These days must be scheduled with your supervisor at least 48 hours in advance.

§ 5.02.06 In order to earn vacation time, you must be a full-time employee on January 1st and actually work at least 1,400 hours in the calendar year for 100% vacation entitlement or 1,000 hours in the calendar year for 50% vacation entitlement. In the event of illness during a vacation, you will not receive additional time off.

§ 5.02.07 If you terminate employment with the Town, you will be eligible to receive pay for any unused vacation in the year of termination plus vacation accrued for the following calendar year on a pro rata basis. The pro rata payment will be the rate of one-twelfth of the full vacation allotment for each full month worked in the calendar year up to the date of termination. Such pro rata application does not apply to a person who has been in the employ of the Town for less than six (6) months. For example, an employee with three (3) years of service, has taken five (5) days vacation, and terminates in September, would receive vacation pay in the amount of

5 days = unused in this calendar year
+ 6.67 days = eight/twelfths (2/3) times 10
(accrued vacation for next year)
11.67 days = total vacation pay at the time of termination

§ 5.02.08 In the event of your death, payment will be made for any unused vacation allowance for which you were eligible on the date of your death. Such payment will be made to the same person who is entitled to receive unpaid wages.

§ 5.02.09 Vacation Buy-Back Option

In lieu of vacation time and with the approval of the Department Head and the Board of Jurisdiction, an employee may be paid for up to one week of their vacation allowance. Only one (1) week total per calendar year can be paid in lieu of time-off.

§ 5.02.10 Medical Disability Vacation Buy Back Option

When in the opinion of the department head, circumstances warrant and would serve the best interest of municipality, the department head may pay for up to five days (one week) of an employee's unused and available vacation allowance per bi-weekly pay period, provided that (1) the employee is on approved medical disability, and (2) such payment is made with the approval of the department head and the board of jurisdiction.

§ 5.02.11 Scheduling of Vacations

We will, to the extent possible, schedule vacation periods at times most desired by you. Employee requests for vacation dates, which are submitted to the Town by December 31st of each year, will be

handled based upon seniority if conflicts arise. After December 31st vacation dates will be approved on a first-come first-served basis. You are asked to request vacation at least 90 days in advance whenever possible. Advance scheduling gives you the best opportunity of receiving the vacation days you desire.

§ 5.03 Personal Leave

Regular full-time employees earn personal leave at the rate of 6 days per year. Unused personal leave may be accumulated to a maximum of 20 days. Accumulated personal leave is paid to employees upon separation of employment.

§ 5.03.01 Each regular full-time employee is entitled to six (6) personal days after employment of one (1) full calendar year with the Town, and six (6) personal days each year thereafter. These days may be used as personal business or sick days. These days are cumulative and if not used will be paid at the employee's current rate upon retirement or termination, subject to a maximum number. If a separation occurs while an employee is on a medical disability, the personal days will be paid at the rate immediately prior to the medical disability going into effect.

§ 5.03.02 The maximum number of personal days that may be cumulated and carried by any employee is fixed at twenty (20). Accumulations will be annually determined at the amount duly cumulated and credited to the worker as of December 31 of each year. At no time will any employee be paid for any more than twenty unused personal days at retirement or separation from service.

§ 5.04 Use of Donated Leave

§ 5.04.01 An employee may volunteer to share accumulated vacation leave or personal leave hours with another employee. Leave may only be donated to an employee for the beneficiary employee's own illness or injury when the beneficiary employee does not have enough time in his or her own accumulated leave accounts. Donated leave may not be used for the care or support of the employee's family.

§ 5.04.02 Donated leave time must be in increments of at least eight (8) hours.

§ 5.04.03 Both employees must receive approval from their departmental director and document the exchange of time with the Office of the Clerk-Treasurer. An employee must exhaust all sick leave, vacation leave, personal and overtime compensatory leave to be eligible to receive donated hours from other employees. The maximum amount of leave time an employee may accept is 1,040 hours. The employee will receive the time on an as needed basis and not in one lump sum.

§ 5.04.04 If donated time exceeds the amount of leave needed by the ill or injured employee, the leave balance will be restored for use by the donor employee.

§ 5.05 Holidays

§ 5.05.01 Except for Lead Support Services Clerk, Support Services Clerks, Support Services Training Coordinator, and Sworn Police Officers, the Town recognizes and pays for holidays throughout the year for full-time employees who have worked at least 30 calendar days with the Town. They are:

New Year's Day, **January 1**
Martin Luther King's Birthday, 3rd Monday in January
President's Day, **Third Monday in February**
Good Friday
Memorial Day
Labor Day
Thanksgiving Day
Day after Thanksgiving
Christmas Eve
Christmas Day, **December 25**

Independence Day, July 4

§ 5.05.02 If a recognized holiday falls on a Saturday, the previous Friday will normally be observed as the holiday. If the holiday falls on a Sunday, the following Monday will normally be observed. The Town Council President is authorized to issue a written clarification when the weekend rules don't work. You will be paid for eight hours **or the appropriate equivalent for salaried workers** for the holidays listed above, unless otherwise indicated.

§ 5.05.03 You will not be eligible for holiday pay if you have an unexcused absence on your regularly scheduled shift before the holiday or on your first regularly scheduled shift after the holiday.

§ 5.05.04 Lead Support Services Clerk, Support Services Clerks, Support Services Training Coordinator and Sworn Personnel will be granted **eleven (11)** holidays (subject to Police Department regulations).
(Amended by Ordinance 1580 12 Jan 2015)

§ 5.06 Jury Duty/Witness Leave

§ 5.06.01 Full-time employees will be granted paid time off, to perform the worker's civic duty of serving on a jury or responding to compulsory process. Any full-time is eligible for jury duty when **the employee** is summoned to serve on a jury. The pay for **the employee's** service will be the lesser of your actual time lost from work due to jury service up to eight hours of **the employee's** regular pay for each day served, **subject to one of the following:**

(A) The employee shall sign over the check or warrant received for service as a juror or witness, provided the check or warrant does not also include reimbursement for mileage to the Office of the Clerk-Treasurer. The Clerk-Treasurer shall receipt the check or warrant into the fund or funds from which the employee's regular pay was drawn. The amount is not subject to re-appropriation. If the payment includes mileage then subdivision (B) shall apply.

(B) If the employee's jury duty check includes mileage, this subdivision shall apply. The amount of compensation received by the employee as a juror or witness shall be reported to the Town. The amount of the compensation received excluding any portion representing mileage reimbursement, will be deducted from the employee's regular pay;

§ 5.06.02 In order to protect the leave time as Jury/Witness leave, the employee shall present any proof of attendance or process documents to the employee's supervisor and the office of the Clerk-Treasurer. The employee is expected to return to work if the employee is not required to report for jury or other compulsory duty on a scheduled day, or if two or more hours of the employee's regular workday remain before or after jury service. If called for jury duty or are presented with notice of compulsory process, the employee shall immediately present the summons to your supervisor. Paid time off for jury duty is not counted as hours worked for purposes of determining overtime.

§ 5.06.03 Appearances for testimony, investigation, and court preparations as a result of official duties as a Town employee are compensated as actual hours worked and are not classified as paid leave under this section.

§ 5.06.04 Jury or Witness leave shall not apply when the employee is appearing in court for criminal or civil cases being heard in connection with the employee's personal matters.
(Amended by Ordinance 1696 25 Feb 2019)

§ 5.07 Bereavement Leave

If a death should occur in your immediate family, you may be given personal paid-time off for personal bereavement if you are a full-time employee who has worked at least 30 calendar days with the Town.

The pay will be for the time lost from work because of the bereavement, but not to exceed eight (8) hours per day at your straight time rate, up to a maximum of (3) three days. You will not be paid for bereavement leave on days for which you are otherwise compensated (holidays, vacation, etc.). Immediate family is defined as current spouse, child, step-child, parent or step-parent, current mother-in-law, current father-in-law, brother, sister, grandparents, current spouse's grandparents or grandchildren. If you need time off for bereavement leave, you must notify your supervisor as soon as possible. Upon returning from bereavement leave, you may be asked to present a copy of the funeral notice to your supervisor.

§ 5.08 Military Leave

All full-time, non-seasonal employees of the Town of Highland, who are members of the Indiana National Guard, its reserve components, the retired personnel of the naval, air, or ground forces, or a reserve member of the armed forces of the United States **shall be considered qualifying employees who** are entitled to compensated leave of absence from their respective duties, in addition to regular vacation period, without loss of pay for consecutive or non-consecutive periods not to exceed a total of fifteen (15) days in any calendar year for such time as they are:

(a) On state active duty under IC 10-**16-7-5**;
(b) On training duties of the State of Indiana under order of the governor as commander in chief;
(c) Members of any reserve component under the order of the reserve component authority; or
(d) On temporary military training duties of the United States Armed forces under orders from the Department of Transportation;

In addition, to the foregoing, any qualifying employee in the instance described above, will be entitled to additional supplemental compensation and <u>active duty leave time</u> after the fifteen (15) days described, with such additional pay or supplemental compensation to be paid by the municipality, charged to the host department of the employee on active duty leave. This additional pay is supplemental to the active duty pay provided by the employee's military branch during the active duty or tour. Active duty pay provided by the military branch during the active duty or tour will be supplemented to bring the qualifying employee to the level of pay the employee would earn as municipal employee without overtime at time of the start of the military leave for a maximum of ~~50~~ 102 weeks. Any general increase in pay will be delayed for the duration of the leave time and will begin at the time of return in the same fashion as medical leave.

The employee is required to provide the Town with evidence of the dates of departure and return as soon as practical prior to departure and shall be required to furnish the Town upon return, evidence of satisfactory completion of such training **or duty.**

In order to qualify for the additional supplementary leave and pay above, the qualifying employee must provide a copy of the relevant orders and evidence of military pay as soon as practicable to the Office of the Clerk-Treasurer.

§ 5.09 Uncompensated Leaves of Absence

After six (6) months of employment, leaves of absence for personal reasons, but not to work, or to seek or secure work elsewhere, may be granted without pay by the Town. Uncompensated leaves of absence must be for at least five (5) days but may not exceed thirty (30) days and are made with the written permission of the Department Head. The Town Council shall be notified of all granted leaves of absence. Further, any extension of leaves beyond thirty (30) days must be approved in writing by the Town Council. The Town will grant such a request only when your services are not required by the Town. No uncompensated leave of absence will be granted if any of your vacation time, compensation time, or personal business days remains and, if granted, you will not be paid for any

holidays which fall on dates covered by your leave. Any employee considering a leave of absence should first talk with their Department Head to discuss the effect such a leave may have on other benefits provided by the Town. You may be eligible for additional leave. See the Family and Medical Leave section for additional information.

§ 5.10 Family and Medical Leave

§ 5.10.01 Eligibility

Employees who have been employed by the Town for at least 12 months and who have worked at least 1,250 hours during the 12 month period preceding the start of the leave, are eligible for a total of 12 workweeks of unpaid leave during any 12 month period for one or more of the following reasons:

1. Because of the birth of the Employee's child and in order to care for such child (within 12 months of the placement of the child);
2. Because of the placement of a child with the Employee for adoption or foster care (within 12 months of the placement of the child);
3. In order to care for the Employee's spouse, child, or parents if they have a "serious health condition".

In any case in which a husband and wife are entitled to a leave under paragraphs 1 or 2 above, or for care of a sick parent in paragraph 3 above, they will be limited to a combined total of 12 workweeks of leave in any 12-month period. For purposes of this policy, "serious health condition" means an illness, injury, impairment or physical or mental condition that involves:

A. Any period of incapacity or treatment in connection with inpatient hospital, hospice, or residential medical care facility;
B. Any period of incapacity requiring absence from work, school, or other regular daily activity of more than three calendar days and involves continuing treatment by a health care provider; or
C. Continuing treatment by a health care provider for prenatal care, or a chronic or long-term health condition that is incurable or so serious that, if not related would likely result in a period of incapacity of more than three calendar days.

§ 5.10.02 Medical Certification

Any request for leave under paragraph 3 of §5.07.01 above must be supported by a certification issued by the applicable heath care provider that includes:

(1) The date on which the serious health condition commenced;
(2) The probable duration of the condition;
(3) A diagnosis of the serious health condition
(4) A brief statement of the regimen of treatment prescribed for the condition by the health care provider
(5) An indication of whether inpatient hospitalization is required
(6) A statement of the medical necessity of the leave and the expected duration and schedule of the intermittent or reduced leave schedule (if the leave must be taken on an intermittent or reduced leave schedule)
(7) A statement that the employee is needed to provide care and an estimate of the amount of time that the need will continue if the need is based on the need to care for a spouse, child or parent.

In its discretion, the Town may require a second medical opinion and periodic re-certification to support the continuation of a leave at its own expense. If the first and second opinions differ, the Town, at its own expense, may require the binding opinion of a third health care provider, approved jointly by the Town and the Employee.

If certified as medically necessary for a serious health condition of the Employee's spouse, child or parent, leave may be taken on an intermittent basis. However, the Town may require the Employee to transfer temporarily to an alternative position which better accommodates recurring periods of absence or to a part-time schedule, provided that the position has equivalent pay and benefits.

§ 5.10.03 When the need for leave is foreseeable, such as the birth or adoption of a child, or planned medical treatment, the Employee must provide reasonable notice (generally 30 days) and make efforts to schedule leave so as not to disrupt Employer operations. In cases of illness, the Employee will be required to report periodically on his/her leave status and intention to return to work.

§ 5.10.04 Employees on a Family and Medical Leave of Absence can maintain coverage of any "group health plan" for the duration of the leave at the level and under the conditions coverage would have been provided had the Employee continued in employment continuously for the duration of such leave. Any Employee who is granted an approved leave of absence under this policy is advised to provide for the retention of his/her group insurance coverage by arranging to pay the employee's share of the premium contributions during the period of unpaid absence. Such payments must be made on a weekly basis to the Office of the Clerk-Treasurer. In the event that an Employee elects not to return to work upon the completion of an approved unpaid leave of absence, the Town may recover from the Employee the cost of any payments made to maintain the Employee's coverage, unless the failure to return to work was for reasons beyond the Employee's control.

§ 5.10.05 Upon return from leave, which has been extended no longer than 12 workweeks, an Employee will be restored to the same or to an equivalent position to the one held when the leave started. If the leave was due to an Employee's own serious health condition, the Employee will be required to submit a certification from his/her health care provider stating that the Employee is able to perform the function of the job.

§ 5.10.06 If an Employee fails to return to work at the expiration of a Family and Medical leave, his /her employment will be terminated.

§ 5.10.07 Employees may substitute any accrued personal leave time or accrued vacation leave time for any leave time taken as Family and Medical Leave.

§ 5.10.08 If an Employee qualifies for time off pursuant to any other leave of absence policy of the Town and qualifies for a leave under this policy, any time taken off pursuant to the other leave of absence policy shall be counted against the 12 weeks available under this policy. In addition, any family and medical leave taken pursuant to this policy will reduce the maximum amount of leave taken pursuant to any other leave of absence policy.

§ 5.11 Special Administrative Leaves

§ 5.11.01 Special Administrative (non-disciplinary) Law Enforcement Leave

(A) A police employee who has been involved in a Departmental shooting incident, whether or not the incident resulted in death or bodily injury to any person, may be granted administrative leave with pay and continuation of benefits by submitting a written request to the employee's commanding officer, all pursuant to standard operating procedures or rules/regulations as duly adopted in writing

by the Town Board of Metropolitan Police Commissioners. Before administrative leave with pay and continuation of benefits may be granted, documentation of the change of duty status must be made on a form approved by and filed with the Clerk-Treasurer, and carrying the signatures of the following persons for the accompanying purposes:

1. Metropolitan Police Chief, evidencing approval;
2. Chairman, Town Board of Metropolitan Police Commissioners, evidencing approval and notice of the action; and
3. The Municipal Executive (Town Council President), evidencing notice of the action.

(B) Except as otherwise provided herein, administrative leave with pay and continuation of benefits for a police employee who has been involved in a Departmental shooting incident resulting in bodily injury to any person other than the police department employee shall not be granted nor extended for a period greater than six (6) months. Administrative leave with pay and continuation of benefits for a police department employee who has been involved in a Departmental shooting incident resulting in the police employee's own bodily injury or the death to any person shall not be granted nor extended for a period greater than twelve (12) months.

(C) The leave herein authorized under this provision is not to be construed as administrative leave discussed in IC 36-8-3-4.

§ 5.11.02 Special Administrative Leave

A municipal employee may be granted administrative leave with pay and continuation of benefits in limited circumstances, where deemed necessary and appropriate. The leave shall not exceed ten (10) days but may be renewed or extended with the same approval needed for the initial grant of leave. The leave may not be initiated by the employee for whom the leave is granted. Before administrative leave with pay and continuation of benefits may be granted, documentation of and rationale for the leave must be made on a form approved by and filed with the Clerk-Treasurer, and carrying the signatures of the following persons for the accompanying purposes:

1. The appropriate department head, evidencing approval; if the employee is a department head, only the signatures of the following officers will be required;
2. Chairman, of the relevant Board or Commission; and
3. The Municipal Executive (Town Council President), evidencing notice of the action.

(Amended 12 March 2018)

§ 5.12 Public Employees' Retirement Fund Pension Plan

§ 5.12.01 All regular full-time employees of the Town except Police Officers are eligible to participate in the Indiana Public Employee's Retirement Fund (PERF), a defined benefit pension plan. PERF is an agent multiple-employer public employee retirement system, which provides retirement benefits to plan members and beneficiaries. The PERF retirement benefit consists of the pension provided by employer contributions plus an annuity provided by the member's annuity savings account. The Town contributes to the Fund at an actuarially determined rate. The rate for calendar year 2008 is 7.25% of a covered employee's salary. The annuity savings account consists of member's contributions, set by state statute at 3% of compensation, plus the interest credited to the member's account. The employer may elect to make the contributions on behalf of the member. Ten (10) years of service with the Town of Highland or another PERF Employer is required before employer contributions to the pension become vested.

§ 5.12.02 Employer payment of Members' Contributions for Public Employees' Retirement Fund.

(A) The Town of Highland as employer shall pay all or 100% of the employee's contribution for the Clerk-Treasurer, a PERF covered position, payable to the fund specified in IC 5-10.2-3, and as authorized under IC 5-10.3-7-9.

(B) The Town of Highland as employer shall pay all (100%) of the employee's contribution for all regular full-time, non-public safety, civil unit employees, as defined in IC 5-10-8-2.6 who occupy and work in a PERF covered position, payable to the fund specified in IC 5-10.2-3, and as authorized under IC 5-10.3-7-9.

§ 5.13 Deferred Compensation Plans (IRS Section 457 Plans)

The Town of Highland as employer may from time to time establish or participate in deferred compensation plans (Section 457), all pursuant to IC 5-10-1.1 et seq. Employees of the Town of Highland, as defined in IC 5-10-1.1-2, may participate in the plans. The terms of the plans will be subject to law and as described in plan documents that are generated from time to time. The Office of the Town Clerk-Treasurer will serve as the responsible department for any deferred compensation plans selected by the Town Council, subject to any administrative or plan agreements approved in consequence of any selected plans.

§ 5.14 1925 Police Officers' Pension Plan

Police Officers hired before April 30, 1977 were covered by the 1925 Police Officers' Pension Plan, which is a single-employer defined pension plan. The plan is administered by a local pension board. The plan provides retirement, disability and death benefits to plan members and beneficiaries. No current employee of the Police Department is eligible for benefits from this pension plan; only retirees and their beneficiaries are receiving benefits from the 1925 Police Officers' Pension Plan.

§ 5.15 1977 Police Officers' and Firefighters' Pension Plan

Police Officers hired after April 30, 1977 are provided a retirement benefit by the 1977 Police Officers' and Firefighters' Pension and Disability Fund, a cost-sharing multiple-employer defined benefit pension plan administered by the Indiana Public Employee's Retirement Fund (PERF). Covered employees may retire at age 55 with 20 years service. An employee with 20 years service may leave service, but will not receive benefits until reaching age 55. The plan also provides for death and disability benefits. Plan members are required to contribute 6% of a first-class police officers' salary. The Town contributes to the Fund at an actuarially determined rate. The current rate, which has not changed since the inception of the plan, is 21% of a first-class police officers' salary.

§ 5.16 Deferred Retirement Option Plan for Police Officers

Indiana Code § 36-8-8.5 allows members of the Police Pension Plans to enter into a Deferred Retirement Option Plan (DROP). The member who elects to enter DROP agrees to:

(A) Execute an irrevocable election to retire on the DROP retirement date and shall remain in active service until that date;

(B) Elect a DROP retirement date not less than 12 months and nor more than 36 months after the member's DROP entry date; and

(C) Agree not to remain in active service as a police officer after the date the member reaches mandatory retirement age.

A member may make an election to enter the DROP only once in the member's lifetime. A member who retires on the member's DROP retirement date may elect to receive an enhanced retirement benefit consisting of the DROP frozen benefit plus an additional amount calculated by multiplying the amount of the DROP frozen benefit by the number of months that the member was in the DROP. The benefit may be paid in a lump sum on the retirement date or in three equal annual payments commencing on the retirement date.

§ 5.17 Authorized Use of Town Owned and/or Leased Vehicles

§ 5.17.01 The following individuals by title are permitted subject to the concurrence of the governing board of jurisdiction to utilize municipal leased and owned vehicles for the purpose of conducting public business, the providing of transportation to and from the work place and reasonable, limited personal business:

Metropolitan Police Chief
Metropolitan Police Commanders
Metropolitan Police Detectives, Criminal Investigation Division
Metropolitan Police Officer Friendly/School Resource Officer
Public Works Director
Public Works Supervisors
Pump Station Mechanic
Superintendent of Parks & Recreation
Fire Chief

The persons identified by title and only those persons are authorized to use the vehicle for reasonable personal business. Except as otherwise restricted by rules or regulations of the Metropolitan Police Department, reasonable personal business is described as using the vehicle within a fifty (50) mile radius of the Town of Highland and the assigned worker could be expected to be called for duty. In all cases municipal vehicles may not be used for personal business beyond the fifty-mile radius. No other person but the municipal employee(s) as listed by title in this section is authorized to operate the vehicle for personal use. Pursuant to Federal and State income tax guidelines, employees using town owned or leased vehicles shall keep records of personal use. Personal use shall be taxed as fringe benefit according to the mileage rates established by the United States Internal Revenue Code.

§ 5.17.02 The Metropolitan Police Department may permit certain Criminal Investigation Division assigned officers to employ one of the following:

(A) Such officer(s) who reside within the corporate boundaries of the Town may utilize Municipal leased or owned vehicles for reasonable personal business and for the purpose of conducting business and the providing of transportation to support call-out duty, when such officer is scheduled; or

(B) If departmental regulations and circumstances prohibit the use of a municipal vehicle, such officer(s) may utilize his or her leased or owned personal vehicle for the limited purpose of conducting business and the providing of transportation to support call-out duty, when such officer is scheduled for which the utilizing officer may be reimbursed for mileage at the prevailing IRS rate;

§ 5.17.03 The Metropolitan Police Department may permit certain Patrol Division assigned officers who reside within the corporate boundaries of the Town to utilize Municipal leased or owned

vehicles for reasonable personal business and for the purpose of conducting business and the providing of transportation to support call-out duty, when such officer is scheduled according to the terms of rules and regulations of the Board of Metropolitan Police Commissioners, that are not in conflict with this section.

§ 5.17.04 The Metropolitan Police Department may adopt regulations that are more restrictive than the general fifty-mile allowance for reasonable personal business contained in this section.

§ 5.18 Use of Personal Vehicle for Public Business

§ 5.18.01 Elected Officers, appointed officers and employees with proper approval may use personal vehicles in the conduct of public business. Adequate liability coverage must be carried before consideration can be given for use of personal automobile in connection with Town business.

(A) For routine and reoccurring use of a personal vehicle for public business, the Employee's insurer will provide a certificate of insurance naming the Town of Highland as an "additional insured" in limits of at least $250,000 each person and $500,000 each accident for death and bodily injury exposures and $100,000 for property damage exposures.

(B) For employees, whose use of a personal vehicle for public business use is infrequent, the employee will provide proof of insurance in limits prescribed by Indiana statutes.

§ 5.18.02 Except for travel which may be defined as commuting to and from work, elected officers, appointed officers and employees may be reimbursed for mileage incurred in the performance of public business at the prevailing IRS rate. The Clerk-Treasurer shall have the authority to provide for the manner and frequency of the reimbursement provided that reimbursement shall be made at least quarterly.

§ 5.19 Police Department Clothing Allowance

§ 5.19.01 Incumbent Radio Operators and Sworn Officers

Each active, full-time **Lead Support Services Clerk, Support Services Clerks, Support Services Training Coordinator** and Law Enforcement Officers of the Metropolitan Police Department as defined by I.C. 5-2-1-2(a) shall be paid the following uniform allowances:

$ 950 per year for each uniformed personnel
$ 950 per year for each plain clothing personnel
$ 150 per quarter for Support Services Administrator, **Lead Support Services Clerk, Support Services Clerks, Support Services Training Coordinator**

§ 5.19.02 Newly Hired Officers

The Town through its Metropolitan Police Department will provide newly hired officers with the following uniform components as described in the appropriate section of the most recently approved and promulgated SOP Manual of the Metropolitan Police Department:

(3) three long sleeved shirts	(1) one winter hat
(3) three short sleeved shirts	(1) one dress hat
(3) three trousers	(1) one name tag
(6) six shoulder patches	(1) one pair of handcuffs with case
(1) one pair of shoes	(1) one cartridge case
(1) one trouser belt	(1) one holster
(1) one duty belt	(2) two embroidered badges
(1) one winter jacket	(1) one pepper spray holder
(1) one lightweight jacket	(1) one flashlight holder

Newly hired officers will not be eligible to receive any clothing allowance until the quarter in which they reach the first year anniversary of their hiring date. Newly hired officers may be reimbursed by the Town through the Metropolitan Police Department for one-half (1/2) the cost of two (2) work shirts and two (2) pairs of slacks required while attending the Indiana Law Enforcement Academy, with the submission of proper receipts.

§ 5.19.03 Motor Cycle Officers

Officers assigned to operate the motorcycle on duty may be reimbursed for the cost of two (2) pairs of motorcycle slacks or the cost of one (1) pair of motorcycle boots with the submission of proper receipts.

§ 5.19.04 Part-time Support Services Clerks and the Animal Warden

Part-time **support services clerks** and the animal warden will be provided with uniform shirts and slacks as deemed necessary by the **proper** Supervisor. Part-time **support services clerks**, the animal warden, and other civilian employees will not be eligible for clothing allowance.

§ 5.19.05 Special Programs

The Town of Highland through its Metropolitan Police Department may from time to time institute programs, such as bicycle patrol and Volunteers in Police Service (VIPS) that require special uniforms. At the discretion of the Chief of Police, the Town through its Metropolitan Police Department may elect to provide the necessary uniform components or to reimburse participants for all or a portion of the specialized uniform.

§ 5.20 Fire Department Allowances

Unless otherwise provided, each active and participating member Firefighter of the Highland Fire Department shall be paid the following allowances pursuant to I.C. 36-8-12-5(a):

§ 5.20.01 A Clothing Allowance for the Chief of the Highland Fire Department in the amount of Nine Hundred Fifty Dollars ($950) per year shall be paid in the same manner as such allowances are paid to the Chief of the Metropolitan Police Department;

§ 5.20.02 A Clothing Allowance for all other active and participating Firefighters of the Highland Fire Department in the amount of One Hundred ($100) per year shall be paid in the third quarter;

§ 5.20.03 In addition, all members of the Highland Fire Department, upon successful completion of the probationary period, shall be issued at department expense a class A dress uniform, which consists of the following elements:

1. White dress shirt
2. Navy blue coat
3. Dress hat
4. Badge and nameplate

The Fire Chief shall have the power to offer further specifications for design and details of the foregoing in support of the purposes of the dress uniform and its intended uses and applications for the department. All uniforms issued pursuant to this section are property of the Town of Highland Fire Department. Maintenance of this uniform shall be the responsibility of the member. Upon separation of a member for any reason, the uniform will be returned.

§ 5.20.04 Automotive Allowance: Each active and participating member firefighter shall be paid an automobile allowance of one hundred dollars ($100) per year for the use of the member's automobile in the line of duty, to be paid in the third quarter.

§ 5.21 Clothing for Public Works Personnel

Incumbent regular full time Public Works personnel are provided with three (3) new sets of uniforms per year. New regular full time Public Works personnel are provided five (5) new sets of uniforms after the probationary period. Jackets are provided as needed.

§ 5.22 Clothing for Parks and Recreation Personnel

Incumbent regular full time Parks Department personnel are provided with three (3) new sets of uniforms per year. New regular full time Parks Department personnel are provided five (5) new sets of uniforms after the probationary period. Three new t-shirts are provided every summer for full time and part-time parks department personnel. Jackets are provided as needed.

§ 5.23 Educational Assistance

The Town may provide reimbursement for educational expenses of eligible full-time employees of the municipality. The educational expense must have a reasonable relationship to the operation of the municipality. Employees who are eligible for the benefit may not choose to receive cash or other benefits that must be included in gross income in lieu of educational assistance. The educational assistance may NOT exceed the amount of $5,250, which is the maximum amount that may be excluded from annual wages or income under the guidelines of the IRS.

In all cases, the program will only reimburse eligible employees for allowable educational expenses which includes books, fees, some supplies, and tuition for courses taken at an accredited university or college leading to the award of a graduate or post-baccalaureate degree in a recognized program of study having a reasonable relationship to operation of the municipality. Reimbursement may be conditioned on certain grade attainment and in all cases will require documentation of passing and academic award of credit for the course or courses subject to the program.

The specific terms for an eligible employee shall be memorialized in a written agreement which may set forth additional terms and limits provided that none are in conflict with the terms of the provisions of the compensation and benefits ordinance or the governing law of the State or the United States. The President of the Board of Jurisdiction shall be authorized to determine employee eligibility provided that program will comply with IRS guidelines and this section. The written agreement will be approved by the Town Council President. In all cases, the program is subject to budget constraints and appropriations.

§ 5.24 Use of Mobile/Cellular Phones

There are work-related situations that require an employee's use of mobile/cellular telephones, such as issues that require emergency or immediate attention, prolonged discussions or working from home during non-business hours. Some departments require an employee to be accessible at all times to mobile/cellular telephones provided by the Town, however, these telephones shall be used primarily for business-related purposes and any personal use of such resources must satisfy the conditions set forth in this section.

Certain employees may be provided town owned cellular/mobile telephones to assist them to conduct public business or in the performance of their required duties for the town. Employees so assigned shall be responsible for reimbursing the town in an amount fixed by this section for any incidental personal calls made or received on the cellular telephone assigned to the employee. Telephone bills must itemize and identify incoming and outgoing telephone calls for billing period. Certain other employees may be reimbursed for charges on an employee-owned telephone for authorized calls made in support of public business or the performance of their required duties for the town. It provides guidance as to the appropriate circumstances for the Town to purchase and to provide service support for mobile/cellular telephones for use by employees. In addition, the section establishes the procedures for documenting the use of Town-provided mobile/cellular telephones and reimbursement to the Town of any non-incidental personal use of such telephones.

The procedures contained in this section are intended to conform to Internal Revenue Service Regulations governing employer-provided mobile/cellular telephones for use by employees outside the workplace. IRC §132 excludes certain fringe benefits from taxation. Examples of nontaxable fringe benefits are identified in the Internal Revenue Code as:

No Additional Cost Service [IRC §132(b)]

Example: A cell telephone plan that provides free network, long distance and evening calls and a specified number of shared minutes per month below which there is no additional charge to the Employer.

Qualified Employee Discounts [IRC §132(c)]

Example: A cell telephone plan that provides equipment and service at a discount to employees.

De Minimus Fringe Benefit [IRC §132(c)]

Example: A cell telephone plan that enables personal use of employer provided telephones that have a small value and accounting for it is unreasonable or administratively impractical.

§ 5.24.01 Approval of Transactions

The Town Council President has authority to approve the purchase of mobile/cellular telephones and the accompanying services under which the Town is the official "customer" to be billed.

§ 5.24.02 Criteria for Purchasing

(A) The Town may provide employees with mobile/cellular telephones for use in conducting official Town business when there is a significant business-related reason for doing so. To this end, the Town Council President may authorize purchase of mobile/cellular telephones only when the primary use of telephone will be for Town business. When an employee's Town business use of mobile/cellular telephones or services will be minimal, Town funds may not be used to purchase these devices or services. However, an employee may request reimbursement for any business-related use of an employee-purchased mobile/cellular telephone or service that results in noticeable incremental costs to the employee.

(B) The Town Council President shall employ the following criteria in evaluating the business-related reason for purchasing electronic resources for employee use for those employees whose jobs entail the following responsibilities:

1. Travel – Employees who frequently travel or are out of the office and need to be in contact with staff, clients or managers.
2. Work Location – Employees who typically work in the field or at job sites where access to a telephone is not readily available.
3. Emergency Response – Employees who need to be contacted and/or to respond in the event of an emergency or are required to be available during non-business hours.
4. Other – Employees who are required by their department to be accessible at all times by electronic means.

(C) When purchasing equipment and services, the Town Council President should seek out cost-effective products, such as flat rate, fixed charge, mega minutes, and other discounted service plans. Mobile/cellular telephone contracts should be selected to reflect the level of expected business-related minutes per month use. Department Heads shall review mobile/cellular device billing charges to confirm business and personal usage and annually review and adjust service contracts to reflect the average business-related use to maximize cost savings.

§ 5.24.03 Incidental Personal Use

Personal use of electronic communications resources must not adversely affect the performance of an employee's official duties or the functions of an employee's department. Such personal use shall not (i) directly or indirectly interfere with the Town's operation of electronic communications resources; (ii) interfere with the user's employment or other obligations to the Town; or (iii) burden the Town with noticeable incremental costs.

§ 5.24.04 Use Agreement

(A) An employee who is to be provided electronic communications equipment must prior to receipt of such equipment sign an agreement acknowledging that use of the equipment will be limited to Town business and only incidental personal use.

(B) The Employee Agreement Concerning the Use of Mobile/Cellular Telephones, which is set forth in the following form, is to be used for this purpose:

To: DEPARTMENT HEAD

Re: Employee Agreement Concerning Personal Use of Cellular Phone

I hereby certify that I am the recipient of the following Town provided Cellular Phone: _____.

I agree that this equipment is to be used primarily for official Town business, and that any personal use of the equipment will be only incidental in nature. I agree to reimburse my department for any personal use of this equipment that results in noticeable incremental costs to the Town, in accordance with the Cellular Phone Use Policy described at §5.22 of the Employee Handbook.

I understand that all records related to the purchase, use, and disposition of this Town-owned equipment, including cell phone statements, are the property of the Town and potentially subject to disclosure under the Indiana Public Records Act.

I further understand that I am responsible for safeguarding the equipment, including any data on the equipment, and controlling its use. If the Town determines that there is no longer a business need for me to possess such equipment, I will return the equipment. Likewise, if I separate from Town employment, I will promptly return the equipment to my department.

In the interest of safety, I will exercise appropriate care and caution and will not operate a motor vehicle while using this equipment.

Name: _____ Title: _____

Signature_____ Date: _____

§ 5.24.05 Fixed Fee for Personal Use; Reimbursement for Personal Use that Exceeds Usage Plan

(A) In order to reimburse the Town for incidental personal use of a municipal provided mobile/cellular telephone, the assigned employee will be required to pay to the town the amount of five dollars ($5.00) per month while the employee continues to use a municipally provided cellular/ mobile devise. The employee may arrange the manner of payment with the Office of the Clerk-Treasurer.

(B) Further, any noticeable incremental costs for personal use of a mobile/cellular telephone (costs that are clearly in excess of the fixed amount) must be reimbursed by the employee furnished with the resource. With respect to mobile/cellular devices, it is the responsibility of the employee to reimburse the Town for non-incidental personal calls on statements billed

to the Town, when the employee exceeds the package minutes under a mobile/cellular telephone contract. The Town shall be reimbursed for any personal use associated with the excess minutes at the excess-minute rate.

§ 5.24.06 Reimbursement for Business Use of Personal Cellular Phones

An employee may request reimbursement for the business use of an employee's personal mobile/cellular telephone or similar device not provided by the municipality. The Town will reimburse only those charges associated with business calls occurring beyond the employee's regular calling plan contract. No reimbursement shall be made for business calls made within the minutes covered under the employee's contract.

§ 5.24.07 Confidentiality

Employees should be aware that all records related to the purchase, use and disposition of Town owned electronic communications equipment, including mobile/cellular telephone statements, are the property of the Town and are potentially subject to disclosure under the Indiana Public Records Act.

§ 5.24.08 Employee Discounts

An employee of the Town may accept mobile/cellular equipment and services at discount from a mobile/cellular telephone vendor as a benefit of employment with the Town without conflict of interest.

§ 5.24.09 Use of a Mobile/Cellular Phones While Operating a Motor Vehicle

(A) Employees who are issued handheld cellular/mobile telephones for business use and whose job responsibilities include regular or occasional driving are expected to refrain from using their telephone while driving. Regardless of the circumstances, employees shall pull off to the side of the road and safely stop the vehicle before placing or accepting a call.
(B) Employees whose job responsibilities do not specifically include driving as an essential function, but who are issued a mobile/cellular telephone for business use are also expected to abide by the provisions above.
(C) Under no circumstances are employees allowed to place themselves at risk to fulfill business needs. Employees who are charged with traffic violations resulting from the use of their telephone while driving will be solely responsible for all liabilities that result from such actions.
(D) Violations of this section will be subject to discipline, including termination.

§ 5.24.10 Administration and Responsibilities

(A) The Town Council is responsible for establishing and updating the procedures set forth in this section.

(B) Department heads are responsible for ensuring that any purchase of electronic communications resources for use by an employee conforms to the requirements of this subchapter and that claims submitted for payment or reimbursement include the appropriate supporting documentation. The department head is also responsible for monitoring the personal and business-related use of mobile/cellular telephones and obtaining

reimbursement for any personal use that burdens the Town with noticeable incremental costs.

(C) The Clerk-Treasurer's Office is responsible for ensuring that departmental payment or reimbursement requests for expenditures related to the purchase and use of electronic communications resources are made in accordance with the procedures set forth in this subchapter.

(D) An employee assigned a municipally provided mobile/cellular telephone is responsible for safeguarding the equipment and controlling its use. The employee is required to reimburse the Town for any Personal Use of such equipment that results in noticeable incremental costs to the Town. The employee is expected to avoid using the equipment under any circumstances where such use might create or appear to create a hazard, including use while operating a motor vehicle. The employee should immediately report the theft or loss of such equipment to his or her department and to the service carrier, if applicable. Upon separation from Town employment, the employee is required to promptly return such equipment to the Town.

§ 5.25 Travel and Conferences

This section provides policies that shall be used in providing or reimbursing Town Council Members, Clerk-Treasurer, Members of Commissions and Boards, Appointed Officials and Employees for travel accommodations when such travel has been authorized and budgeted.

§ 5.25.01 Registration Fees

The cost of registration or similar fees for conferences, seminars and other similar meetings or functions related to Town affairs will be provided for or reimbursed when supported by original receipts. Whenever possible, arrangements for these affairs should be made by a designated person and directly billed to the individual.

§ 5.25.02 Transportation

(A) Travel by commercial airlines, rail service, bus, or similar common carrier mode will be provided for at the prevailing "coach" or "tourist" rate when authorized and supported by original receipts.

(B) Taxi fare and/or the cost of other local (public) conveyance will be provided for or reimbursed when supported by original receipts.

(C) Parking fees and tolls will be reimbursed when supported by original receipts.

(D) When a personal automobile is used in lieu of common carrier transportation, the first seven hundred (700) miles (of a round trip) will be reimbursed at the rate allowed by the IRS, miles in excess of seven hundred (700) will be reimbursed at 1/2 the maximum IRS rate.

§ 5.25.03 Lodging

(A) Lodging shall be provided for or reimbursed when supported by original receipts in the following manner:

(1) Single occupancy will be provided at the actual cost.
(2) Double occupancy will be provided at actual cost when both parties are eligible for reimbursement.
(3) Double occupancy will be provided at the single occupancy rate when only one party is eligible for reimbursement unless room is a one-rate charge.

(B) Reimbursement for lodging costs shall include room costs, associated local taxes and up to an average of four (4) telephone charges per day per eligible party. Any other charges made to the room are the responsibility of the employee.

(C) Room service will not be reimbursable.

§ 5.25.04 Meals

(A) Meals will be reimbursed when supported by original receipts up to $60.00 per day, including gratuities. Such gratuities should be reasonable and should not exceed twenty percent (20%).

(B) When separate checks are not available, an employee may claim reimbursement for other employees up to the maximum amount provided for in the preceding section multiplied by the number of employees provided that each employee is identified by name and that an original receipt is provided. Payment for meals for any individual will not be made to more than one individual.

(C) No reimbursement will be made for meals when already provided for in the registration fee.

§ 6.00 GROUP INSURANCE

§ 6.01 Unemployment Compensation Insurance

Unemployment Compensation Insurance protects you if you become unemployed through no fault of your own. Application for benefits is made through our local State Employment Service offices.

§ 6.02 Workers Compensation Insurance

The Town provides, at no expense to you, Workers Compensation Insurance. This insurance becomes effective on your first day worked and protects you if you are injured on the job. To be sure to protect yourself under this insurance, REPORT ALL INJURIES, HOWEVER SLIGHT, TO YOUR SUPERVISOR IMMEDIATELY.

§ 6.02.01 In case of occupational injuries or illnesses, Worker's Compensation payments will be supplemented to bring them to the level of pay at time of disability for a maximum of 52 weeks.

§ 6.02.02 A worker who is on a disability leave covered by Workers Compensation who would experience a profound, undue hardship if the payments described § 6.02.01 expire, may apply for up to an additional maximum of 26 weeks. No additional payments beyond the 52 weeks maximum will be paid unless approved by the worker's department, and the Town Council President as municipal executive. No payment will be made that is unlawful under IC 22-3-3.

§ 6.03 Group Health Insurance

The Town will provide a health insurance plan for all eligible employees of the town hereinafter defined. The Town reserves the right to change alter, modify or cancel the insurance plan coverage with or without notification. The Town provides **eligible employees of the town hereinafter defined** with a group insurance plan **in which the** coverage begins on the first day of employment. For specific details on the type and extent of coverage, please refer to the plan document, which will be provided at the time of enrollment. *(Amended by Ordinance No. 1445. 14 December 2009; Ordinance No. 1615 23 May 2016)*

§ 6.03.01 Town Council Member Eligibility

The Town will not pay the premiums for the members of the Town Council for participation in any group insurance plans. However, the Town Council members are eligible to participate in the group insurance plans of the Town at their own expense for the cost of the premiums. Town Council members who elect dependent coverage shall pay in full the appropriate premium corresponding for such coverage.

§ 6.03.02 IRC Section 125 "Flex Plan"

The Town of Highland will provide a "full flex" plan pursuant to and as outlined in § 125 of the Internal Revenue Code. The plan will provide for conversion of employee premiums for group health insurance provided by the Town as employer. It will further provide for election by covered employees and officials to convert a medical reimbursement account and a dependent care reimbursement account. The governing body may from time to time adopt third party services agreements to carry out portions of the plan. Details of the plan shall be maintained as a plan document and retained on file.

§ 6.03.03 Health Savings Accounts (HSA Accounts)

The Town of Highland will provide a HIGH DEDUCTIBLE option in its group health insurance to support worker establishment of a *Health Savings Account* pursuant to and as outlined in the relevant sections of the Internal Revenue Code. The plan option will only be available to **eligible employees of the town hereinafter defined** who may elect the higher deductible option for the group health insurance plan. The Town of Highland as employer will make a financial contribution to the individual health saving account of the ~~r~~ **eligible employees of the town hereinafter defined** that elect to participate. The **eligible employees of the town hereinafter defined** must not be covered by any other group health insurance plan. Details of the plan shall be maintained as a plan document and retained on file. The financial contribution will be paid in **two semi-annual** installments **scheduled by the Clerk-Treasurer** and be based upon the high deductible group health plan elected by the participating **eligible employees of the town hereinafter defined** as follows:

Group Health Insurance High Deductible (HSA) Plan Employer Contribution

	Employer **Semi Annual** Contribution	Annualized
Employee Single Coverage	**$490.50**	**$ 981.00**
Employee With Children	**$948.00**	**$1,896.00**
Employee With Spouse	**$998.00**	**$,1996.00**

Family Coverage with Spouse and Children	**$1,446.00**	**$2,892.00**

Amended by Ordinance No. 1527 adopted November 26, 2012; *Ordinance No. 1615 23 May 2016; Ordinance No. 1655 adopted September 25, 2017;Ordinance No. 1690, adopted 26 November 2018.*

§ 6.03.04 Employee Contribution for Certain Group Insurance Premiums

(A) All **eligible employees of the town hereinafter defined** shall share the cost of the group health premium, which are to be paid through a salary reduction (payroll deduction) taken as a pre-tax payment according to the terms of a duly authorized IRC Section 125 Plan for the Town of Highland. The amount of the shared premium shall be fixed by ordinance as may be passed from time to time. All **eligible** employees and elected officers may elect to include **spouses** and dependents under their group coverage, **except that select part-time workers eligible for group coverage may only elect to include dependents and not spouses under their group coverage.**

(B) All **eligible employees of the town hereinafter defined** who elect to participate in the group health insurance shall pay the identified share of the group premium based upon the type of enrolled coverage selected by the **eligible employees of the town hereinafter defined** for the duration of such coverage. For participating full-time employees and the clerk-treasurer, **t**he identified share of the group premium will be calculated as a percentage share of the annual gross base wage or salary of the covered employee, excluding longevity or overtime and then fixed as a flat amount to be paid bi-weekly**. For select part-time employees, the group premium will be calculated as a percentage share of the bi-weekly pay, and shall be collected during all bi-weekly pay periods regardless of work performed. The Clerk-Treasurer is empowered to implement the collection to achieve optimal administrative ease achieving the policy objects of this provision.**

(C) All **eligible employees of the town hereinafter defined** who elect to participate in the group health insurance ***non high-deductible plan***, shall pay the identified share of the group premium as follows:

Employee Share of Health Insurance Premium

Employee Single Coverage	1% of Base Pay
Employee With Children	2% of Base Pay
Employee With Spouse	2% of Base Pay
Family Coverage with Spouse and Children	3% of Base Pay

(May be affected by Wellness Incentive Enactments adopted from time to time)

(D) All **eligible employees of the town hereinafter defined** who elect to participate in the group health insurance ***high-deductible*** plan, shall pay the identified share of the group premium as follows:

Employee Share of Health Insurance Premium

Employee Single Coverage	.5% of Base Pay
Employee With Children	1% of Base Pay
Employee With Spouse	1% of Base Pay
Family Coverage with Spouse and Children	1.5% of Base Pay

(May be affected by Wellness Incentive Enactments adopted from time to time)

(E) **Participants in the Town of Highland Wellness Program.** All **eligible employees of the town hereinafter defined** who participate in the group health insurance and who have **participated in identified events or completed identified tasks as may be identified in the proper enactment regarding wellness as may be passed from time to time by the Town Council,** shall pay the identified share of the group premium based upon the type of enrolled coverage selected by the **eligible employees** for the duration of such coverage, **at a reduced rate.** The identified share of the group premium will be calculated as a percentage share of the annual gross base wage or salary of the covered employee, excluding longevity or overtime and then fixed as a flat amount to be paid bi-weekly, according to the following schedule:

(1) Employee Share of Health Insurance Premium for Wellness Program Participants NON High-deductible Plans

Employee Single Coverage	.5% of Base Pay
Employee With Children	1.5% of Base Pay
Employee With Spouse	1.5% of Base Pay
Family Coverage with Spouse and Children	2.5% of Base Pay

(2) Employee Share of Health Insurance Premium for Wellness Program Participants High-deductible Plans

Employee Single Coverage	0 % of Base Pay
Employee With Children	.5% of Base Pay
Employee With Spouse	.5% of Base Pay
Family Coverage with Spouse and Children	1.0% of Base Pay

(May be affected by Wellness Incentive Enactments adopted from time to time)

(F) ***Non-Participants in the Town of Highland Wellness Program.*** All eligible employees of the town hereinafter defined who elect to participate in the group health insurance, but fail to comply with the mandatory requirements of the wellness program, shall pay the identified share of the group premium based upon the type of enrolled coverage selected by the **eligible employees of the town hereinafter defined** for the duration of such coverage. **The contribution percentage will be adjusted to that of participants of the Town of Highland wellness program on the first pay after compliance is determined.** The identified share of the group premium will be calculated as a percentage share of the annual gross base wage or salary of the covered employee, excluding longevity or overtime and then fixed as a flat amount to be paid bi-weekly, according to the following schedule:

Employee Share of Health Insurance Premium for Non-Participants in the Wellness Program

Employee Single Coverage	2% of Base Pay
Employee With Children	4% of Base Pay
Employee With Spouse	4% of Base Pay
Family Coverage with Spouse and Children	6% of Base Pay

Amended by *Ordinance No. 1689 12 November 2018*

§ 6.03.05 Group Dental Insurance Plan

The Town will provide a dental insurance plan for all full-time employees and the Clerk-Treasurer **and their dependents**. Group dental plans have no required additional fee participation by full-time employees or the Clerk-Treasurer.

Amended by *Ordinance No. 1615 23 May 2016*

§ 6.03.06 Eligible Employees Defined

(A) For the purposes of Section 6.03, the term eligible employee will refer to the following:

(1) The Clerk-Treasurer, his dependents and spouse;
(2) Full-time employees, regularly scheduled for 40 or more hours per week and their dependents and spouse;
(3) Select part-time workers, who are regularly scheduled 30 hours each week at least forty-eight (48) weeks of the calendar year, and their dependent child or children.

Amended by *Ordinance No. 1615 23 May 2016*

§ 6.03.07 Group Vision Insurance Plan

The Town does NOT presently provide a vision insurance plan.

§ 6.03.08 Town Council Action Necessary for Hiring of Select part-time workers

Notwithstanding provisions in the wage and salary ordinance or any other, no part-time worker who is a *select part-time worker under Section 6.03.06* or who may be considered an *"eligible employee" may be hired without the board or commission of jurisdiction's preliminary action and the final authorizing action of the Town Council.* Amended by *Ordinance No. 1615 23 May 2016*

§ 6.04 Group Life, Accidental Death and Dismemberment Insurance

The Town will provide a group life, accidental death and dismemberment insurance plan for all full-time employees and the Clerk-Treasurer. All employees and the Clerk-Treasurer shall pay $1.00 per year toward the premiums for their group life insurance coverage.

§ 6.05 Insurance for Deceased Employee's Dependent Family

The Town will respond in one of the following ways, as directed by the deceased employee's dependent family:

§ 6.05.01 Option 1. The Town will pay premiums up to include two (2) full months following the date of the death month of the employee for the decedent's dependent family. Thereafter, additional coverage will be available under the terms of the COBRA law.

§ 6.05.02 Option 2. The Town will allow a conversion of the equivalent economic value of the benefit described in Option One, based upon the cost of the health/medical insurance premium that decedent's dependent family would be granted under Option One, and permit the value to be applied to the dental insurance benefit that may be in force and available at the time. This would be in lieu of the Town paying the medical/health and other insurance benefits offered in Option One.

The Town will then pay the premiums for the dental plan as elected under the terms of COBRA. Once the converted value was extinguished, the dependent would be then required to pay premiums for coverage remaining under COBRA provisions.

(A) Any such conversion will be adjusted for any time that may have lapsed from the date of the death month of the employee for the decedent's dependent family and the notification of the election of Option Two. However, any additional benefit which may be offered under the terms of any dental plan then in effect would still be extended without modification or reduction to the benefit of this option.

(B) The Clerk-Treasurer shall have authority to implement and administer this benefit policy, as adopted, including implementing the provisions related to the employee group premium co-payment, all in accordance with IC 36-5-6 et seq.

§ 6.06 Extension of Insurance Plan Coverage for Terminated or Separating Employee

The right to COBRA continuation coverage was created by a federal law, the Consolidated Omnibus Budget Reconciliation Act of 1985 (COBRA). Group Health Insurance Plan as defined in this section includes medical insurance, dental insurance and other health insurance benefits that may be offered by the Town or mandated by state or federal law at the time of retirement or separation of an employee. Employees who separate from employment for any reason and who elect to continue their group insurance plan coverage according to the terms of the insurance company contract, must pay insurance premiums under the terms of the COBRA law. Such electing employees shall pay the actual cost of the premium plus a two percent (2%) service fee. Payment must be made to the Clerk-Treasurer prior to the 5th day of each month for the month's insurance. If payment is not received by the fifth day of the month, the premium will not be paid for that month. No notices of payment due will be sent to separating employees. The Clerk-Treasurer shall have authority to implement and administer this benefit policy, as adopted, including implementing the provisions related to the employee group premium co-payment, all in accordance with IC 36-5-6 et seq.

§ 6.07 Insurance Plan for Retired and Separating "Public Safety" Employees

(A) Retired Public Safety Employees as defined in I.C. 5-10-8-2.2 (b), public safety employees who are receiving disability benefits under I.C. 36-8-6, I.C. 36-8-7, I.C. 36-8-7.5, or I.C. 36-8-6-8 and surviving spouses and dependents of public safety employees who die while in active service or after retirement shall be eligible for participation in a Retirees' Group Health and Life Insurance Plan as established by the Municipality.

(B) A retired or disabled public safety employee who is eligible for group health insurance under this enactment may elect to have the person's spouse, and dependents covered under the group health and life insurance plan at the time the person retires or becomes disabled. In order to participate in this program, the retired public safety employee, public safety employee receiving disability benefits or a surviving spouse or dependent of a public safety employee who dies in active service or after retirement must perform the following:

1. The eligible party must file a written request for insurance coverage with the municipality in the Office of the Clerk-Treasurer within ninety- (90) days after the person retires or begins receiving benefits;

2. The eligible party must pay an amount equal to the total of the employer's share and the employee's share of the premium for the group health insurance by a date certain each month. The eligible party must pay an amount equal to the employee's share of the premium for the group life insurance by a date certain each month. No additional notice or any invoicing will be given. For the retirees' plan, the employee share of the group health or medical insurance shall be One Hundred Percent of the premium

(100%). For the retirees' plan, the employee share of the group life insurance shall be fifty percent (50%) and the employer share shall be fifty percent (50%).

(C) **Dependent.** For the purposes of this benefit, a dependent of a public safety employee means a natural child, step child, or adopted child of a public safety employee who:

1. Is less than eighteen (18) years of age;
2. Is eighteen years of age or older and physically or mentally disabled (using disability guidelines established by the Social Security Administration); or
3. Is at least eighteen (18) and less than twenty-three (23) and is enrolled in and regularly attending a secondary school or is a full-time student at an accredited college or university;

(D) A retired or disabled public safety employee's eligibility for the retiree's health insurance under this section ends on the earlier of the following:

1. When the public safety employee becomes eligible for Medicare coverage as prescribed by 42 U.S.C. 1395 et seq.;
2. When the municipality terminates the health insurance program for active public safety employees;

(E) **The municipality as employer will pay up to one month of group health insurance coverage at the level in which the public safety employee was enrolled just before retirement provided the public safety employee is eligible for a retirement benefit under Section 6.07 of this policy and I.C. 5-10-8-2.2. The coverage will be for up to one month or when the public safety employee obtains coverage under another health insurance plan, whichever occurs earlier.**

(F) A surviving spouse's eligibility for the retiree's health insurance under this section ends on the earliest of the following:

1. When the surviving spouse becomes eligible for Medicare coverage as prescribed by 42 U.S.C. 1395 et seq.;
2. When the municipality terminates the health insurance program for active public safety employees;
3. The date of the surviving spouse's remarriage;
4. When health insurance becomes available to the surviving spouse through employment;

(G) A dependent's eligibility for the retiree's health insurance under this section ends on the earliest of the following:

1. When dependent becomes eligible for Medicare coverage as prescribed by 42 U.S.C. 1395 et seq.;
2. When the municipality terminates the health insurance program for active public safety employees;
3. When the dependent no longer meets the criteria defining a dependent as set forth in this enactment;
4. When health insurance becomes available to the dependent through employment;

(Amended by Ordinance No. 1646 24 April 2017)

§ 6.08 Insurance Plan for Retired and Separating "Public" Employees

(A) A Retired Public Employee as defined in I.C. 5-10-8-1(7)(A), who:

(i) Will have reached fifty-five (55) years of age on or before the employee's retirement date but will not be eligible on that date for Medicare coverage as prescribed by 42 U.S.C. 1395 et seq.;
(ii) Who will have completed twenty (20) years of creditable employment with a public employer on or before the employee's retirement date, ten (10) years of which must have been completed immediately preceding the retirement date; and
(iii) Who will have completed at least fifteen (15) years of participation in the retirement plan of which the employee is a member on or before the employee's retirement date; or

Separating Employees who:

(iv) Will have reached sixty (60) years of age on or before the employee's separation date but will not be eligible on that date for Medicare coverage as prescribed by 42 U.S.C. 1395 et seq.; and
(v) Who will have completed five (5) years of creditable employment with the municipality on or before the employee's separation date, all five years of which must have been completed immediately preceding the separation date;

shall be eligible for participation in a Retirees' Group Health and Life Insurance plan as established by the Municipality. In order to be eligible, the public employee must be a participant in **INPRS,** qualify for a benefit under I.C. 5-10.3-8**-2.6.**

(B) A retired public employee who is eligible for group health and life insurance under this **policy** may elect to have the person's spouse covered under the group health insurance plan at the time the person retires. In order to participate in this program, the retired or separating public employee, must perform the following:

1. The eligible party must file a written request for insurance coverage with the municipality in the Office of the Clerk-Treasurer within ninety (90) days after the person retires or begins receiving benefits;

2. The eligible party must pay an amount equal to the total of the employer's share and the employee's share of the premium for the group health insurance by a date certain each month. The eligible party must pay an amount equal to the employee's share of the premium for the group life insurance by a date certain each month. No additional notice or any invoicing will be given. For the retirees' plan, the employee share of the group health or medical insurance shall be One Hundred Percent of the premium (100%). For the retirees' plan, the employee share of the group life insurance shall be fifty percent (50%) and the employer share shall be fifty percent (50%).

(C) **The municipality as employer will pay up to one month of group health coverage at the level in which the public employee was enrolled just before retirement provided the public employee is eligible for a retirement benefit under Section 6.08 of this policy and I.C. 5-10-8-2.6. The coverage will be for up to one month or when the public employee obtains coverage under another health insurance plan, whichever occurs earlier.**

(D) A retired or separating public employee's eligibility for the retiree's health insurance under this section ends on the earlier of the following:

1. When the public employee becomes eligible for Medicare coverage as prescribed by 42 U.S.C. 1395 et seq.;

2. When the municipality terminates the health insurance program for active public employees;

(E) A retired public employee's surviving spouse covered at the time of the employee's retirement may continue coverage by paying premiums according to the same terms as the retired employee would have been required to pay for coverage selected by the spouse. A surviving spouse's eligibility for the retiree's health insurance under this section ends on the earliest of the following:

1. When the surviving spouse becomes eligible for Medicare coverage as prescribed by 42 U.S.C. 1395 et seq.;

2. When the municipality terminates the health insurance program for active public employees;

3. The date of the surviving spouse's remarriage;

4. Two years after the date of the employee's death;

(F) A dependent's eligibility for the retiree's health insurance under this section ends on the earliest of the following:

1. When dependent becomes eligible for Medicare coverage as prescribed by 42 U.S.C. 1395 et seq.;

2. When the municipality terminates the health insurance program for active public employees;
3. When the dependent no longer meets the criteria defining a dependent as set forth in this enactment;
4. When health insurance becomes available to the dependent through employment;

§ 7.00 COMMUNICATIONS

§ 7.01 Bulletin Boards

You will be expected to watch the department bulletin boards frequently and carefully. One is for notices that may be required by federal, state or local laws, rules or regulations. Another will be used by the Town to keep employees informed at all times of special announcements, activities, work schedules, open job positions and other matters.

§ 7.02 Resolving Employee Complaints

The Town recognizes that there are going to be times when you have a problem or complaint that needs to be resolved. We seek to ensure that any problem or complaint you may have receives prompt and thorough consideration. In most cases, any problems or complaints you may have can be resolved by a frank and friendly discussion with your supervisor. If for any reason this proves unsatisfactory or inadequate, we want you to bring your problems to the attention of the Department Manager. If the Department Manager can't resolve your problem or complaint, we want you to bring the topic to the governing board of jurisdiction. (In Parks & Recreation, the Parks and Recreation Board is the governing board; in Public Works, the Town Council is the governing board; in the Police Department, the Metropolitan Police Commission is the governing board).

In order to provide you with an effective means to bring your problems or complaints concerning your well being at work to the attention of Town management, we have established a "Complaint Procedure" to be used by all employees. Remember, the only way we can answer your questions or help solve your problems is for you tell us about them. We hope you will feel free to use our Complaint Procedure. You, as well as all of us at the Town, can benefit from it.

§ 7.03 Complaint Procedure

§ 7.03.01 First, see your Supervisor. If you have a complaint or problem that has not been resolved to your satisfaction, talk to your immediate supervisor about it. In most cases, any problems or complaints you may have can be resolved by frank and friendly discussion with your supervisor since he or she knows more about you and your job than any other Town Official. Your supervisor is there to help you and to see that you are treated fairly; you should feel free to speak with him or her candidly.

§ 7.03.02 If not satisfied, ask for a review by the Department Manager. Shortly after receiving your complaint, your immediate supervisor will give you an answer. If you are not satisfied with his or her answer, you may then present your complaint in writing to the Department Manager. The Department Manager will review your complaint and discuss it with your supervisor. After three (3) working days, the Department Manager will make a final decision as to the merits of your complaint.

§ 7.03.03 If the problem or complaint is still unresolved, the decision of the Department Manager may be reviewed by the governing board of jurisdiction if it is submitted in writing to the president of the governing board within fifteen (15) working days after the decision of the Department Manager. After receipt of an employee complaint, the governing board will meet with the employee and the Department Manager in an attempt to solve the problem or complaint. The governing board will give a written response within thirty (30) working days after receipt of the complaint. The decision of the governing board shall be final and binding on the Town and the employee or employees involved.

§ 7.03.04 In special cases, you can go directly to the Department Manager. If you have a complaint that, for some special reason, you do not want to discuss with your immediate supervisor, you can request a personal meeting with the Department Manager.

§ 8.00 EMPLOYEE CONDUCT AND DISCIPLINE

§ 8.01 Work Rules

The work rules set forth below have been established by the Town to ensure that all employees are provided with a safe, orderly and productive work environment. They describe certain acts that have been determined to be violations of acceptable work behavior. You are expected to read these rules carefully and to conduct yourself accordingly. The Town will endeavor to follow the procedures set forth in this section. Alleged violations of the rules will be investigated to see if they are supported by the facts. You will be given the opportunity to present your side of the incident before final disciplinary action is taken. When it is determined that the work rules have been disregarded or violated, you will be subject to one of the following forms of disciplinary action: a verbal warning, a written warning, a final written warning or discharge.

These work rules do not constitute an exhaustive list of all of the acts that will subject an employee to disciplinary action. No set of work rules can cover all situations and the penalties may be waived or increased depending on the particular facts involved. They do cover the most common types of employment misconduct. Cases of unacceptable work behavior not covered by these rules will be handled on an individual basis, subject to such penalties, as the Town may deem appropriate for the type of misconduct involved. You should note that an accumulation of offenses over a period of time that have not been corrected even though unrelated is unacceptable.

Accordingly, it is the Town's policy to discharge any employee who has been disciplined on three (3) previous occasions with disciplinary counseling during any twelve (12) month period, whether because of specific work rule violations, unsatisfactory job performance, other misconduct, or any combination thereof.

We believe members of the municipal workforce will understand that Work Rules are necessary to fairly and openly administer the daily affairs of a growing Town. In that way, one can expect to be treated by the Town and by your fellow employees with consideration and fairness. It is hoped that you will, in turn, treat your fellow employees and the Town in the same manner.

§ 8.01.01 Authority for Leaves with pay during the pendency of investigations.

(A) During the course of investigating alleged violations of work rules or employee misconduct, department managers are authorized to suspend from the work schedule an employee or employees with pay and continuation of benefits about whom the allegations are made.
(B) The suspension may not exceed ten (10) days, excluding weekends, unless specifically approved by the relevant governing board of jurisdiction.
(C) When the alleged violations of work rules or employee misconduct allege a department head, the authority to suspend the department head with pay and continuation of benefits is conferred upon the relevant governing board of jurisdiction.

(Amended by Ordinance No. 1653 adopted 08.28.2017)

§ 8.02 Major Infractions

Employees who commit any of the following acts, which have been determined to be serious violations of acceptable work behavior, will be subject to discharge for the first offense.

(A) Insubordination, including failure or refusal to promptly carry out the orders or instructions of any Supervisor or member of management while on duty or on Town property.
(B) Provoking or engaging in a fight while on duty or on Town property.
(C) Threatening physical harm to a Supervisor, member of management, citizen or fellow employee.
(D) Directing profane, abusive, insulting or threatening language at a Supervisor, member of management, fellow employee or citizen.
(E) Destruction, damage or abuse of Town property or the property of other employees, or citizens.
(F) Theft of Town property or the property of other employees or citizens, or the unauthorized use or possession of any such property.
(G) Possession, display or use of explosives, firearms or other dangerous weapons while on duty or on Town property unless your job specifically requires such use or possession.
(H) Using, possession, selling, distributing or being under the influence of alcoholic beverages, illegal drugs or controlled substances while on duty or on Town property.
(I) Commission of any criminal offense (other than a minor traffic violation) while on duty or on Town property, or commission of any criminal offense that might adversely affect the employee's work or work relationships.
(J) Misrepresentation or omission of material facts on an employment application or any other document used to secure or retain employment with the Town.
(K) Acts of dishonesty, including falsification or alteration of time sheets, production records or any other documents used in connection with work.
(L) Punching/marking another employee's time card or having another employee punch/mark your time card.
(M) Failure to report to work on three (3) consecutive working days without notifying your Supervisor or the Department Manager. (Under these circumstances, the employee will be deemed to have voluntarily quit employment with the Town.)
(N) Overstaying a leave of absence without written authorization from the Town. (Under these circumstances, the employee will be deemed to have voluntarily quit employment with the Town.)
(O) Encouraging or engaging in any unprotected work stoppage, slowdown, walkout, cessation of work or any other activity designed to restrict or delay the production, shipment, delivery or receipt of goods or services by the Town.
(P) Engaging in acts of sexual harassment.
(Q) Engaging in acts of discrimination prohibited by state and/or federal law.

§ 8.03 Minor Infractions

Employees who commit any of the following acts, which have been determined to be violations of acceptable work behavior, will be subject to corrective disciplinary action through the procedures established for performance management.

(A) Exceeding time limits on break or meal periods or taking break or meal periods other than the designated times without proper authorization.
(B) Stopping or leaving work before the end of a scheduled work period without proper authorization.
(C) Sleeping, loafing or wasting time during a scheduled work period.

(D) Using work hours for personal matters. This includes making or receiving non-emergency personal telephone calls, personal e-mails, personal use of computers and the Internet during scheduled work periods.
(E) Directing profane, abusive, insulting or threatening language at a fellow employee.
(F) Creating disharmony among employees or interfering with other employees on the job.
(G) Working time is for work. Solicitation by employees is prohibited during the working time of the solicitor and the employee being solicited. Distribution of literature by employees, including handbills, leaflets, circulars or other matter is prohibited in any working area, including aisles and corridors, at any time. "Working time," means the time when you are actually scheduled to work as opposed to mealtime, breaks, etc.
(H) Posting materials on bulletin boards without the prior written approval of the Department Manager, or defacing, marking, damaging, destroying, or removing materials posted on the bulletin boards authorized by management.
(I) Failure to observe safety rules or regulations, or engaging in any other unsafe or unhealthful conduct.
(J) Having or allowing unauthorized or unregistered visitors in your work area.
(K) Engaging in conduct that violates the Town's policy concerning business ethics and conflicts of interest.
(L) Failure to report any work-related injury or accident -- no matter how minor -- to your Supervisor or the Department Manager.
(M) Irregular attendance or excessive tardiness or absenteeism, whether with or without proper notice.
(N) Failure to provide adequate and acceptable verification of illness or injury, or substantiating documentation for absences due to other reasons when required by your Supervisor or the Department Manager.
(O) Unauthorized entry into designated limited access areas.
(P) Poor workmanship, low productivity or substandard performance.
(Q) Smoking in non-smoking areas.

§9.00 SPECIFIC EMPLOYMENT POLICIES

§9.01 Non-Smoking Policy

No smoking is permitted in any Town Building.

§9.02 Anti-Theft Policy

The security of your property, the Town's property and the property of our citizens is a serious concern to each of us with the municipality. Property losses resulting from theft reduce profits, harm morale, cause suspicion and mistrust and threaten the future of our jobs. As a result, we have a policy to ensure that all suspected theft cases are handled consistently, fairly and with dignity. In the event of theft or suspected theft, the Town will thoroughly investigate the matter. Law enforcement may be called to investigate such thefts. Any employee caught stealing will subject themselves to possible criminal prosecution and/or termination from employment with the Town of Highland. Of course, the Town cannot be held accountable for any loss, destruction or theft of employee's personal property. However, the Town is hopeful that this Policy will help minimize the risk of your personal property or other property being stolen.

§9.03 Non Fraternization and Sexual Harassment Policy

§ 9.03.01 Sexual Harassment Prohibition

(A) **A**ll our employees should be able to work in an atmosphere free from all forms of employment discrimination, including sexual harassment. The Town's policy is to forbid sexual harassment, and this policy extends to each and every level of our operations. Accordingly, sexual harassment, whether by a fellow employee, supervisor, or manager, will not be tolerated. Activities of this nature serve no legitimate purpose; they have a disruptive effect on your ability to perform, and they undermine the integrity of the employment relationship.

(B) **A**llegations of sexual harassment are taken very seriously. Any employee who believes that he or she is the victim of sexual harassment should immediately bring the matter to the attention of his or her supervisor, or to any other member of management (if the employee would feel more comfortable speaking with someone other than his or her supervisor). All such matters will be treated confidentially, and with the utmost discretion. The Town will actively investigate all sexual harassment complaints, and if it is determined that sexual harassment has occurred, management will take appropriate disciplinary action against the offending party, up to and including discharge.

(C) Acts considered to constitute sexual harassment include, but are not limited to, unwelcome sexual advances, requests for sexual favors and other verbal or physical conduct of a sexual nature where: (1) submission to such conduct is either an express or implied term or condition of employment; (2) submission to or rejection of such conduct is used as a basis for an employment decision affecting the harassed person; or (3) the purpose or the effect of such conduct is to substantially interfere with the affected individual's job performance or to create an intimidating, hostile or offensive work environment.

§9.03.02 Prohibited Relationships among employees where there is direct supervision or control between the parties

(A) *Purpose and Scope.* The Town strives to provide an environment for its employees that is respectful, fair and free of unlawful harassment and discrimination. In keeping with its commitment to provide equal opportunity to its employees, and in order to avoid potential conflicts of interest, favoritism, exploitation, harassment or breaches of professional standards, the Town prohibits romantic or sexual relationships among employees where there is supervision, direction or control between the parties.

(B) This policy applies to *all employees*, as defined herein.

(C) For purposes of this policy the following definitions shall apply:

"Supervisor" shall mean any person who has the authority and/or responsibility to hire, promote, discipline, evaluate, assign or direct employees of the Town.

"Employee" shall mean any person employed by the Town in any capacity.

§ 9.03.03 Non Fraternization Policy

(A) No supervisor shall have or pursue a romantic or sexual relationship with any employee who reports to the supervisor or over whom the supervisor has the authority and/or responsibility to hire, promote, discipline, evaluate, assign or direct. If such a relationship exists, both the involved supervisor and involved employee shall report such relationship to the next-level supervisor, to whom the supervisor reports. The next-level supervisor shall take appropriate steps consistent with this policy, including the removal of any reporting or similar relationship between the supervisor and the employee.

(B) Any employee who becomes aware of a relationship prohibited by this policy shall report such relationship to their next-level supervisor (who is not the involved employee/supervisor), or to any other member of management (if the employee would feel more comfortable speaking with someone other than his or her supervisor). The supervisor or manager receiving the report shall inform the department head, which shall coordinate with the supervisor or manager of the involved employee/supervisor to take appropriate action consistent with this policy.

(C) Employees who violate this policy will be subject to discipline, up to and including termination of employment.

(D) Upon request, the Town, **through the Town Council**, may grant exceptions to this policy if it determines that an otherwise prohibited relationship (1) existed prior to the professional relationship of the parties at the Town, and (2) does not present a likelihood of abuse of power by or exploitation of either party.

(E) Questions regarding the applicability of or reporting requirements contained in this policy may be directed to any supervisor or manager. Allegations of harassing behavior must immediately be reported to his or her supervisor, or to any other member of management.

(F) It is unlawful to take adverse actions against any employee/supervisor of the Town for filing a complaint of harassment or discrimination, or for cooperating in an investigation of such a complaint. Retaliation against any employee of the Town who, in good faith, reports alleged harassment or who participates in an investigation is a violation of our policy and is subject to appropriate discipline. Retaliation may have an adverse impact in the following areas: hiring, firing, promotions, demotions, compensation, benefits, ignoring or refusing requests for assistance. This list is not exhaustive.

§ 9.04 Computer Use Policy

§ 9.04.01 Acceptable Use Policy

The Town of Highland is committed to the effective use of computer technology, but safeguards must be established to ensure that investment in hardware and software is achieving the benefits of technology and minimizing adverse consequences. The goal in providing computer network service is to promote resource sharing, innovation and communication. Implementation of this policy is the

responsibility of all Town employees. These guidelines are established to ensure that all computer users are making appropriate and ethical use of computers as well as computer networks. A computer user is required to acknowledge he or she has read these policies and guidelines prior to use of the Town's computer networks. These policies and guidelines are subordinate to State and Federal law, departmental policies, and rules or operating guides where they may be more prescriptive. Standard Operating Policy 5.10 issued January 1, 2006, as it may be amended from time to time, governs computer and Internet use by law enforcement officers engaged in criminal investigations authorized and sanctioned by the Highland Police Department.

§ 9.04.02 Internet

Access to computers enables access to people all over the world and brings with it the availability of material that may not be considered to be of educational value. On a global network, it's impossible to control all materials and information. Eventually, Internet users may discover some information that is controversial, vulgar or otherwise inappropriate. Although the Town may use Internet filter software, there are no guarantees that computer network user will not eventually be exposed to inappropriate material. However, the benefits of informational interaction on the worldwide Internet network far outweigh the negative possibilities.

§ 9.04.03 Terms and Conditions of Computer Network Use

(A) General Policies:

(1) The Town's Computer Network Administrator or designee will provide account numbers and will maintain security. Use of these accounts will be monitored.
(2) The Town's Computer Network Administrator or designee must be notified prior to the downloading or installation of any software program or connecting hardware onto town-owned computers. All software programs and/or hardware connections must be approved and installed by the Town's Computer Network Administrator or designee The Town is not responsible for maintaining or servicing non-approved programs or for any problems caused by or related to such programs. The Town reserves the right to delete any unauthorized software programs.
(3) Making unauthorized copies of software found on any computer is prohibited.
(4) Access and/or use of another user's account is prohibited.
(5) Copying, changing, reading or using files of another user without his or her consent is prohibited.
(6) Unauthorized access to system programs or computer equipment is prohibited.
(7) Responsibility – Users remain responsible for their accounts and computers until logged out.

(B) Acceptable Use

Transmission of any material in violation of any applicable federal or state law or regulation is prohibited. This includes, but is not limited to, copyrighted material, threatening or obscene material or political activity.

(C) Privileges

The use of this network is a privilege, not a right; and is subject to regulation, denial, and discipline for misuse. Non-work related use of the computer shall not be abused and shall result in disciplinary action consistent with the most current edition of employee work rules.

(D) Network Etiquette

Computer users are expected to abide by the generally accepted rules of network etiquette. These include, but are not limited to, the following:

(1) Any speech transmitted by the use of a town owned computer does not constitute speech in a "public forum" and is subject to regulation by the Town.
(2) There should be no expectation of privacy when transmitting information over computer networks. Information transmitted over the town's computer networks will be regarded as "public records". An e-mail that is sent, received or stored on a computer server of the Town may be retained by the Town.
(3) Only proper and courteous language is permitted; vulgarities or any other inappropriate language is prohibited. Messages shall not contain bigotry, racism, violence, threats or hate.
(4) To access, upload, download, or distribute violent, threatening, pornographic, obscene, or sexually explicit materials is prohibited.
(5) Users shall not reveal their personal address or phone number and are not to reveal the name, personal phone number or address of any other individual.
(6) Persons who operate the Town's computer network have access to e-mail. Messages relating to or in support of illegal activities shall be reported to the appropriate authorities.
(7) The network shall not be used in such a way to disrupt the use of the network or other users.
(8) All communications and information accessible via the networks shall be assumed to be the private property of those providing the information. Copying, downloading, etc., without implied or direct permission of the provider and any violation of copyright laws or policies, shall be considered a violation of these rules and code of ethics.

(E) Warranties and Responsibilities

The Town makes no warranties of any kind, expressed or implied, for computer services provided. The Town is not responsible for any damages incurred by a computer user, including loss of data resulting from delays, non-deliveries, mis-deliveries, or service interruptions caused by the Town's own negligence or the user's errors or omissions. Use of any information obtained via a computer network is at the user's risk. The Town specifically does not have any responsibility for the accuracy or quality of information obtained through its computer services.

(F) Unsolicited On-line Contact

Town of Highland employees are not to respond to any unsolicited on-line contact. Users should be aware that some materials accessible via the Internet might contain items that are illegal, defamatory, inaccurate, violent, sexually explicit, or potentially offensive to some people. In addition, it is possible to purchase certain goods and services via the Internet that could result in unwanted financial obligations for which a user would be liable. Vandalism – Vandalism is defined as any attempt to harm or destroy data or equipment. This includes, but is not limited to: uploading or creating computer viruses, changing of system defaults or passwords, destroying network data, and damaging computer equipment. Anyone responsible for vandalism is subject to denial of privileges and/or discipline. There are criminal statutes pertaining to computer tampering (such as Indiana Code 35-43-1-4) and computer trespass (Indiana Code 35-43-2-3). Computer tampering deals with the knowing or intentional alteration or damage to a computer program or data without consent, and computer trespass deals with the knowing or intentional access to a computer system network or a part thereof without consent. Computer tampering is a Class D Felony, and computer trespass is a Class A Misdemeanor. In addition, there are other

criminal offenses which deal with theft and criminal mischief with similar or greater penalties of imprisonment, depending on the circumstance.

§ 9.04.04 Hold Harmless Provision and Indemnification. A computer user who accesses computer equipment, software and networks of the Town of Highland, agrees to hold the Town of Highland harmless and agrees to indemnify the Town from any and all liability, loss or damages the Town may suffer as a result of claims, demands, attorney's fees, costs or judgments against the Town arising out of the user's violation of terms and conditions of computer network use.

§ 9.04.05 Consequences. Violations of the terms and conditions described above shall result in disciplinary action. It is a criminal act under Indiana law to access a computer system and/or damage or alter a computer program, data, or hardware without the consent of the computer owner. A computer user who violates these terms and conditions shall lose computer privileges and be subject to disciplinary action.

§ 9.05 Substance Abuse Policy

§ 9.05.01 Drug and Alcohol Use

The municipality holds that drug and alcohol use is highly detrimental to the safety and productivity of our people, to our Town, and its citizens. Additionally, the Town supports and complies with both State and Federal Drug Free Work-Place Acts. The Town is committed to maintaining a drug-free workplace.

Pursuant to the Drug-Free Workplace Act, all employees are advised that they are required to report to their immediate supervisor in writing any drug or substance abuse related conviction for a work place violation within five (5) calendar days of the conviction. The unlawful manufacture, possession, distribution, transfer, purchase, sale, use, or being under the influence of alcoholic beverages or illegal drugs while on the Town's property, while attending work related activities, while on duty, or while operating a vehicle or machine leased or owned by the Town is strictly prohibited and may lead to disciplinary action, including suspension without pay or discharge.

You may use physician-prescribed or over-the-counter medications, provided that the use of such drugs does not adversely affect your job performance or the safety of other employees or other individuals in the Town. Where the use of such drugs adversely affects your performance, it may be in the best interest of all parties that you be temporarily relieved of your duties.

When a supervisor or management representative believes an employee is unfit for work due to drugs or alcohol, the supervisor or management representative may require the employee to report to a hospital or clinic for a fitness for duty examination.

Further, an accident involving property damage or injury to an employee shall require the involved employee(s) to have a "fitness for duty" examination, a urine and/or blood test to determine the presence of drugs or alcohol. Additionally, employees returning from an approved leave of absence or layoff exceeding 30 days will be required to take a drug test. The exam will be on Employer time, at Employer expense and include a urine and/or blood test to determine the presence of drugs or alcohol. Positive test results may be resubmitted for confirmation. If you refuse to submit to the exam, you will be deemed to be in violation of this policy and will be suspended without pay pending possible termination for refusal to take the medical exam. The Town will use its best efforts to keep all information involving proceedings under this policy strictly confidential.

If you have a drug or alcohol dependency, you will be offered a rehabilitation referral, the successful completion of which could possibly permit continued employment. Subsequent violation of this policy will result in immediate discharge. Any costs incurred for treatment are your responsibility and the insurance coverage provided, as long as the treatment is within the insurance policy guidelines. Otherwise, all costs are your responsibilities.

§ 9.05.02 Drug and Alcohol Policy for Commercial Drivers License (CDL) Drivers

(A) Policy

It is the policy of the TOWN OF HIGHLAND ("Town") that its drivers (CDL) be free of substance abuse and alcohol abuse. Consequently, the use of illegal drugs by drivers is prohibited. Further, drivers shall not use alcohol or engage in "prohibited conduct" as defined herein. The overall goal of this policy is to ensure a drug and alcohol-free transportation environment and to reduce accidents, injuries, and fatalities. This policy is not intended nor should it be construed as a contract between the Town and the employee. This policy may be changed at any time at the sole discretion of the Town.

(B) Types of Tests

Pursuant to Regulations promulgated by the Department of Transportation (DOT), the Town has implemented six circumstances for drug and alcohol tests:

(1) Pre-employment testing
(2) Post-accident testing
(3) Random testing
(4) Reasonable suspicion testing
(5) Return-to-duty testing
(6) Follow-up testing.

(C) Refusal to Test

Refusal to submit to the types of drug and alcohol tests employed by the Town will be grounds for refusal to hire driver/applicants and terminate employment of existing drivers. A refusal to test is defined to be conduct which would obstruct the proper administration of a test. A delay in providing a urine or breath specimen could be considered a refusal. If a driver cannot provide a sufficient urine specimen or adequate breath he/she will be evaluated by a physician of the Town's choice. If the physician cannot find a legitimate medical explanation for the inability to provide a specimen (either urine or breath), it will be considered a refusal to test. In that circumstance the driver has violated one of the prohibitions of the regulations.

(D) Consequences of Policy Violation

Any driver who becomes unqualified or engages in prohibited conduct as set forth herein may be subject to termination of employment.

(E) Pre-Employment Testing

(1) All applicants for driving positions must submit to urine drug tests. A driver/applicant is not required to submit to urine drug tests if the Town can verify that the driver has participated in a valid drug testing program within the preceding thirty (30) days and while participating in that program was either tested within the past six (6) months or participated in a random selection program for the previous twelve (12) months.

(2) The Town must also ensure that no prior employer of the driver has knowledge or records of a violation of the DOT alcohol rules within the previous six (6) months.

(3) If the driver/applicant has an alcohol test result between .02 and .0399, he/she shall not be allowed to drive for 24 hours. The driver shall be removed from safety-sensitive functions and the applicant is not allowed to operate a commercial motor vehicle for 24 hours.

(F) Random Testing

(1) The Town conducts random drug and alcohol testing on a quarterly basis. The Town or its agents will submit all drivers to a random selection system. The random selection system provides an equal chance for each driver to be selected each time random selection occurs. Random selections will be reasonably spread throughout the year. The Town will drug test, at a minimum, 50 percent of the average number of driver positions in each calendar year. The Town will select, at a minimum, 25 percent of the average number of driver positions for random alcohol testing. Random selection, by its very nature, may result in drivers being selected in successive selections or more than once a calendar year. Alternatively, some drivers may not be selected in a calendar year.

(2) If a driver is selected at random, for either drug or alcohol testing, a Town official will notify the driver. Once notified, every action the driver takes must lead to a collection. If the driver engages in conduct that does not lead to a collection as soon as possible after notification, such conduct may be considered a refusal to test.

(G) Post-Accident Testing

(1) When a driver is involved in an accident where a fatality is involved, the driver shall submit to post-accident drug and alcohol testing. When a driver is involved in a recordable accident and receives a citation for a moving violation arising from the accident, the driver also must submit to a drug and alcohol test. Following any accident, the driver must contact the Town as soon as possible.

(2) The DOT requires that any time a post-accident drug or alcohol test is required, that it be performed as soon as possible following the accident. If no alcohol collection can be made within (8) hours, attempts to collect a breath sample shall cease. If no urine collection can be obtained for purposes of post-accident drug testing within thirty-two (32) hours, attempts to make such collection shall cease.

(3) In the event that federal, state, or local officials conduct breath or blood test for the use of alcohol and/or urine tests for the use of controlled substances following an accident, these tests shall be considered to meet the requirements of this section, provided the tests conform to applicable federal, state, or local requirements. The employee will sign a release allowing the Town to obtain the test results from federal, state, or local officials.

(4) In the event a driver is so seriously injured that the driver cannot provide a urine or breath specimen at the time of the accident, the driver must provide necessary authorization for the Town to obtain hospital records or other documents that would indicate whether there were controlled substances or alcohol in the driver's system at the time of the accident.

(H) Reasonable Suspicion Testing

Reasonable suspicion for requiring a driver to submit to drug/or alcohol testing shall be deemed to exist when a driver manifests physical or behavioral symptoms or reactions commonly attributed to

the use of controlled substances or alcohol. Such driver conduct must be witnessed by at least one supervisor trained in compliance with State Statute 382.603.

(I) Prohibited Conduct

The following shall be considered "prohibited conduct" for purposes of this policy:

(1) No driver shall report for duty or remain on duty while having an alcohol concentration of .04 or greater.

(2) No driver shall be on duty or operate a commercial motor vehicle while the driver possesses alcohol unless the alcohol is manifested and transported as part of a shipment.

(3) No driver shall use alcohol while performing safety-sensitive functions.

(4) No driver shall perform safety-sensitive functions within four (4) hours after using alcohol.

(5) No driver required to take a post-accident alcohol test shall use alcohol for eight (8) hours following the accident or until he/she undergoes a post-accident alcohol test, whichever occurs first.

(6) No driver shall refuse to submit to a post-accident, a random, a reasonable suspicion, return-to-duty, or a follow-up breath alcohol or urine drug test.

(7) No driver shall report for duty or remain on duty when the driver uses any controlled substance, except when use in pursuant to the instructions of a physician who has advised the driver that the substance does not adversely affect the driver's ability to operate a commercial motor vehicle.

If the Town has actual knowledge or has reason to believe that a driver has engaged in prohibited conduct, the Town may require the driver to submit to drug and/or alcohol testing. If a driver engages in prohibited conduct, the driver is not qualified to drive a commercial motor vehicle and shall be immediately removed from service. The Town may in its discretion, at the request of the driver, keep the driver's position open while such driver attempts to become re-qualified. The Town may also take action against the employee up to and including termination.

(J) Substance Abuse Evaluation

(1) Any driver who engages in prohibited conduct shall be provided with the names, addresses, and telephone numbers of qualified substance abuse professionals. If the driver desires to become re-qualified, the driver must be evaluated by a Substance Abuse Professional (SAP) and submit to any treatment prescribed by the SAP. Following evaluation and treatment, if any, in order to become re-qualified the driver must submit to and successfully complete a return-to-duty drug and/or alcohol test. Such driver is also subject to follow-up testing. Follow-up testing is separate from and in addition to the Town's reasonable suspicion, post-accident, and random testing procedures. Follow-up testing shall be on a random basis and be in accordance with the instructions of the Substance Abuse Professional.

(2) Follow-up testing may continue for a period of up to 60 months following the driver's return to duty. No fewer than six (6) tests shall be performed in the first twelve (12) months of follow-up testing. The costs of any SAP evaluation or prescribed treatment shall be borne by the driver. The Town does not guarantee or promise a position to the driver should he/she regain qualified status.

(K) Authorization for Previous Test Records

Within 14 days of performing a safety-sensitive function, federal regulations require that the Town obtain certain drug and alcohol testing records from the driver's previous employers for the previous two years. As a condition to employment, the driver shall provide the Town with a written authorization for all previous employers within the past two years to release such drug and alcohol testing records as are required under federal regulation.

(L) Drug Urinalysis

Drug testing will be performed through urinalysis. Urinalysis will test for the presence of drugs and/or metabolites of the following controlled substances: (1) marijuana, (2) cocaine, (3) opiates, (4) amphetamines, (5) phencyclidine (PCP).

The urinalysis procedure starts with the collection of a urine specimen. Urine specimens will be submitted to a SAMHSA-certified laboratory for testing. As part of the collection process, the specimen provided will be split into two vials: a primary vial and a secondary vial. The SAMHSA-certified laboratory will perform initial screening on all primary vials. In the event that the primary specimen tests positive, a confirmation test of that specimen will be performed before being reported by the laboratory to the Medical Review Officer (MRO) as a positive.

All laboratory results will be reported by the laboratory to a MRO designated by the Town. Negative test results shall be reported by the MRO to the Town.

Before reporting a positive test result to the Town, the MRO will attempt to contact the driver to discuss the test result. If the MRO is unable to contact the driver directly, the MRO will contact the Town management official designated in advance by the Town, who shall in turn contact the driver and direct the driver to contact the MRO. Upon being so directed, the driver shall contact the MRO immediately or, if after the MRO's business hours and the MRO is unavailable, at the start of the MRO's next business day. In the MRO's sole discretion, a determination will be made as to whether a result is positive or negative.

Pursuant to DOT regulations, individual test results for driver/applicants and drivers will be released to the Town and will be kept strictly confidential unless consent for the release of the test results has been obtained. Any individual who has submitted a drug testing in compliance with this policy is entitled to receive the results of such testing upon timely written request.

An individual testing positive may make a request of the MRO to have the secondary vial tested. The driver may request that the secondary vial be tested by a different SAMHSA-certified lab than tested the primary specimen. The individual making the request for a test of the second specimen must pre-pay all costs associated with the test. The request for testing of a second specimen is timely if it is made to the MRO within 72 hours of the individual being notified by the Town of a positive test result.

(M) Alcohol Test

The Town will perform alcohol tests using an evidential breath-testing device. The Town may provide use of an evidential breath-testing device through a vendor or agent. The driver shall report to the site of an evidential breath-testing device as notified by the Town. The evidential breath-testing device will be operated by a breath alcohol technician. The driver shall follow all instructions given by the breath alcohol technician. In the event that a driver, on the basis of the evidential breath test, has a blood alcohol content of .02 to .0399, the driver shall be removed from duty for 24 hours or until his/her next scheduled on-duty time, whichever is longer. Applicants are not medically qualified until after

the 24-hour time frame expires. Drivers with tests indicating a blood alcohol concentration of .04 or greater are considered to have prohibited conduct which may result in disciplinary action up to and including termination. All alcohol tests shall be performed just prior to, during, or just after duty.

(N) Training

Town shall ensure supervisors designated to determine whether reasonable suspicion exists to require a driver to undergo testing under State Statute 382.307 received at least 60 minutes of training on alcohol misuse and receive at lease an additional 60 minutes of training on controlled substances use. The training shall cover the physical, behavioral, speech, and performance indicators of probable alcohol misuse and use of controlled substances. The Town shall provide educational materials that explain the requirements of State Statute IC 382.601, consequences of violating the regulations, and the employer's policies and procedures with the respect to meeting these requirements. The materials supplied to drivers may include information on additional employer policies with respect to the use or possession of alcohol or controlled substances, for example, the consequences for a driver found to have a specified alcohol or controlled substances level based on the employer's authority independent of State Statute 382.601. Town shall ensure each driver is required to sign a statement certifying that he or she has received a copy of these materials described in State Statute 382.601.

§ 9.06 Workplace Safety Rules

All employees are responsible for maintaining a safe workplace. Accidents do not "merely happen." The work equipment and facilities have been engineered to provide a safe work environment; however, no mechanical safeguard has been devised that is as effective as a safety-conscious employee. You must consider safety as the most essential aspect of your job. Specific rules vary from job to job. The following rules apply to all jobs and have been established for your protection:

(1) Use the safety equipment and follow the safety procedures for each job.
(2) If an injury or illness occurs while on the job, you must notify a supervisor. All injuries, no matter how slight, must be reported at once. In any case, you should never treat your own or another employee's injury nor remove foreign particles from the eye.
(3) If you desire to leave work before the end of a scheduled shift because of illness or injury, the permission of your supervisor is required.
(4) Report immediately to your supervisor any unsafe acts, hazards, equipment, or condition that is a safety hazard. Before starting any job, be sure you understand the job and the hazards involved.
(5) If treatment is required for an injury, notify the supervisor so that proper OSHA (Occupational Safety and Health Administration) records can be maintained
(6) Aisles, passageways, and floors shall be kept clean, dry, in a sanitary condition and free from stumbling and tripping hazards at all times.
(7) Safety glasses must be worn at all times in designated areas of the workplace. The Town will provide standard safety glasses or safety shields, or goggles at no cost to employees.
(8) Ear protection devices must be worn in the specified areas. The Town will provide appropriate protective items. These items must be returned to the Town upon termination.
(9) Guards and other safety devices are installed for your protection. Do not remove them except for maintenance purposes & replace all guards before starting equipment. Never tie down or block guards on machinery. Federal law requires guards. These guards are there for your protection and safety.
(10) Before doing any type of work on moving machinery, it must be stopped and tagged to prevent accidental start-up.
(11) Before using any ladder, see that it has good safety feet and is free from cracks, broken rungs, and other defects. When necessary to prevent slipping, have another worker hold the bottom of the ladder.

(12) Never use "makeshift" or defective scaffolding, rigging, or stages.
(13) Do not attempt to lift or push objects that may be heavy. ASK FOR HELP when needed. Learn to lift the RIGHT WAY to avoid strains; bend at the knees, keeping the body erect, then push upward with the legs. It is easier and safer.
(14) Shut down machines before cleaning, adjusting, or repairing. Use appropriate lock-out/tag-out system.
(15) Never use defective chisels, sledgehammers, punches, wrenches or other tools. Flying chips from tools with mushroomed or split heads can cause many injuries. Replace or ensure that defective tools are repaired.
(16) Know the location of the nearest fire extinguisher in your vehicle or work area. If seal is broken, pin pulled, or extinguisher is used, notify your supervisor at once so that it can be replaced or re-charged.
(17) Learn the location of all fire exits and alarm boxes in the department.
(18) Learn the location and proper use of the firefighting equipment in the department.
(19) Gloves should not be worn when operating any machine unless their use has been approved by the supervisor. Do not wear gloves, ragged or loose clothing around moving machinery.
(20) If working where there are heavy fumes or dust, the provided respirators are to be worn for protection.
(21) If someone is working carelessly and is liable to be hurt, warn him/her about it and advise him/her to work carefully.
(22) Do not make electrical repairs unless you are qualified to make those repairs. Make sure all power is off. Never touch any loose or broken electrical wires. They may be HOT. Notify your supervisor immediately.
(23) Pay attention to warning signs; they indicate danger.
(24) Any employee exposed to vehicular traffic shall wear warning vests of high visibility material.
(25) All mobile equipment must be inspected before use or at start of the work-day. Do not use defective equipment.
(26) Read the safety bulletins on the bulletin board. They assist in accident prevention.

§ 9.07 "Ride Along" Program Waiver and Rules

Civilians who ride in vehicles owned by the Town must sign a waiver with a parental consent in the case of minors that includes a hold harmless clause whereby the individual agrees to hold harmless the Town of Highland from any and all liability resulting from accidents or injuries involving ride along activity. All ride-a-long participants must sign a copy of the rules verifying that the participant has read and understands the rules governing the ride along program.

Acknowledgement of Receipt

I have received a copy of the Highland Municipal Employee Handbook as authorized and enacted as the Compensation & Benefits Ordinance. I understand that it is my responsibility to become familiar with the contents of this book, as it outlines my benefits and the municipality's policies. I also understand that nothing contained in this Handbook shall be construed as a contract or guarantee of employment.

Should I have any questions regarding these benefits and policies, I understand that I am encouraged to talk them over with my supervisor.

Signed: _____

Employee: _____ Date: _____

Print Name: _____

Counter Signed:

Supervisor: _____ Date: _____

Print Name: _____

(Print optimized at 94%)

ATTACHMENT M

SANITARY SEWER STANDARDS AND SPECIFICATIONS

March 2019; Revised June 2019; Revised March 2020; Revised February 2021

Chapter 17.30

STANDARDS AND SPECIFICATIONS

Sections:

17.30.010 Minimum standards for public facilities.
17.30.020 Minimum standards for streets.
17.30.030 Minimum standards for alleys.
17.30.040 Minimum standards for easement.
17.30.050 Minimum standards for recreation space.
17.30.060 Minimum standards for sanitary sewers.
17.30.070 Minimum standards for water supply.
17.30.080 Materials of construction.
17.30.090 Construction requirements.

17.30.010 Minimum standards for public facilities.

(A) The commission will grant tentative approval of plans, profiles and specifications filed, as above required, for construction and installation of public facilities only in the event that such plans, profiles and specifications conform to the minimum standards required by this chapter.

(B) Upon tentative approval of such plans, profiles and specifications filed, the developer shall transmit detailed street plans in duplicate to the commission for final action. The detailed plans shall show the location and type of curbs, storm drains and sewers; profile of the curb and/or pavement and sewer center lines; elevations of high and low points; cross-section of street with curb and pavement sections; sidewalk grades and grades of property lines. Other public facilities proposed for construction in street rights-of-way or utility easements shall be shown on a separate utility plan and submitted with the detailed plans. The utility plan shall show the location, depth, size and type of pipe or cable for each utility proposed. The location and size of all surface and underground structures (such as manholes, service taps, valves, meters, transformers, poles) shall be clearly shown.

(C) No work on underground facilities shall be started until detailed plans have been approved. No sidewalk or curb and gutter work shall be started until the underground facilities have been inspected and approved in writing by the zoning administrator. The zoning administrator must be notified 24 hours in advance to inspect underground work before it is covered, and to check line and grade of curb forms before concrete is poured. Delays and increased costs due to failure of the developer to give adequate notice for required inspections will be at the developer's risk.

(D) All public facilities shall be substantially complete, to the zoning administrator's satisfaction, before any building permit is issued.

(E) A set of reproducible as-built drawings shall be submitted to the zoning administrator before any occupancy permits are issued.

(F) The developer shall supply or shall defray all expenses incurred by the town in supplying the subdivision with a street lighting system and shall pay for the first year of operating costs. Lights shall be installed at each street intersection, at dead ends or cul-de-sac streets and midway in blocks over 660 feet in length, or such additional lights as the commission or town determines necessary after consultation with Northern Indiana Public Service Company and receipt of a recommendation therefrom. The proposed location of all street lights shall be shown on a street lighting plan which will be part of the required improvement plan.

(G) All subdivisions consisting of one to nine dwelling units shall have underground utility services from the distribution point to the dwelling.

(H) All subdivisions consisting of 10 or more dwelling units shall provide both underground utility distribution network and individual services to each dwelling. [Code 1983 § 19-13; Code 2000 § 213.20].

Penalty, see HMC 1.05.170.

17.30.020 Minimum standards for streets.

(A) Alignment. The center lines of intersecting streets shall be as close to right angles as possible. The simultaneous intersection of streets resulting in traffic from more than four directions is prohibited. The minimum radius of horizontal curvature shall be 500 feet for arterial, commercial and industrial streets, and 250 feet for collector and residential streets.

(B) Storm Drains and Sewers. The storm drainage system shall be designed in conformance with Chapter 15.55 HMC.

(C) Curbs. All newly developed streets or streets proposed for improvement shall be con-

structed with concrete curbs. Nonreinforced concrete curbs and gutters shall be used on streets with asphalt pavement; reinforced integral concrete curbs shall be used with concrete pavement. See figures titled "Typical Cross Section" for the curb type required and "Standard Curb Types" for construction details.

(D) Asphalt Pavement. Asphalt pavements may be designed in accordance with the Thickness Design Manual (MS-1), published by the Asphalt Institute or the AASHTO Guide for Design of Pavement Structures, incorporated herein by reference and made a part of this code, with two copies on file in the office of the clerk-treasurer and available for public inspection, pursuant to IC 36-1-5-4. The soil testing results and design calculations prepared for the selected design method shall be submitted for review with the detailed street plans. The pavement section shall, however, meet the minimum requirements shown in the "Typical Cross Section" figure for the street classification proposed.

(E) Concrete Pavement. Concrete pavements may be constructed as an alternate to asphalt with the approval of the council. Concrete pavement shall be constructed in accordance with the AASHTO Guide for Design of Pavement Structures, incorporated herein by reference and made a part of this code, with two copies on file in the office of the clerk-treasurer and available for public inspection, pursuant to IC 36-1-5-4. The soil testing results and design calculations prepared for this design method shall be submitted for review with the detailed street plans.

(F) Street Name Signs. Standard street name signs shall be provided and installed by the subdivider or developer at all street intersections, at the direction of the commission.

(G) Traffic Control Signs. Traffic control signs shall be provided and installed by the subdivider or developer. Traffic signs shall conform to the Indiana Manual of Uniform Traffic Control Devices, incorporated herein by reference and made a part of this code, with two copies on file in the office of the clerk-treasurer and available for public inspection, pursuant to IC 36-1-5-4. The zoning administrator will indicate the type and location of the required signs.

(H) Walks. Concrete walks shall be constructed adjacent and parallel to the front lot line of all lots proposed for improvement. The walk shall be not less than five feet wide and four inches thick and constructed of nonreinforced concrete on a shaped and compacted subgrade. The surface shall be broom-finished and have a transverse slope of one-quarter inch per foot for drainage. A tooled or sawed contraction joint shall be provided every five feet of length and an expansion joint shall be installed every 50 feet of length and at every projection (power pole, manhole casting, and the like) through the walk. Expansion joints shall be filled with a one-half-inch-thick, resilient, rot-resistant filler material. The maximum longitudinal slope of a walk shall be eight percent where the ADA Act applies and 16 percent elsewhere.

(I) Sidewalk Ramps. Construct handicap accessible ramp at both ends of every crosswalk on all street intersections. The ramp shall be four inches thick and constructed of "Class A" concrete with broom finish or equal nonskid surface. The gutter section shall be maintained through the ramp area and the curb section depressed. See following figures for typical arrangement and dimensions.

(J) Existing Conditions. The applicant shall make every effort to blend the new work with the existing conditions. The slope and alignment of walks and curbs shall be considered in the design layout to provide as continuous and uniform a line and grade as possible. [Amended during 2012 recodification. Code 1983 § 19-14; Code 2000 § 213.21].

Penalty, see HMC 1.05.170.

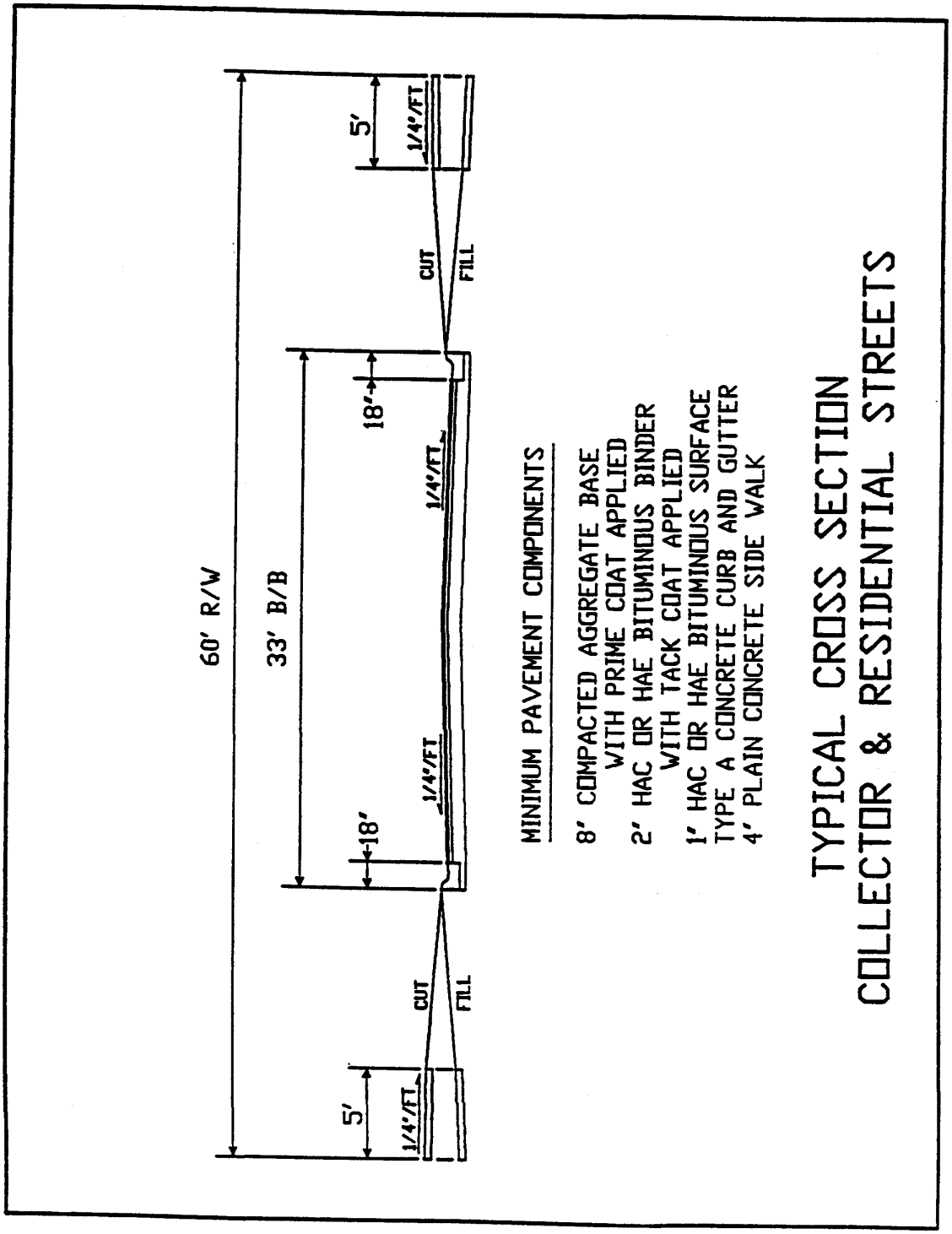
60' R/W
33' B/B
5'
1/4"/FT
CUT
FILL
18'
1/4"/FT
1/4"/FT
18'
CUT
FILL
5'
1/4"/FT
MINIMUM PAVEMENT COMPONENTS
8' COMPACTED AGGREGATE BASE
WITH PRIME COAT APPLIED
2' HAC OR HAE BITUMINOUS BINDER
WITH TACK COAT APPLIED
1' HAC OR HAE BITUMINOUS SURFACE
TYPE A CONCRETE CURB AND GUTTER
4' PLAIN CONCRETE SIDE WALK
TYPICAL CROSS SECTION
COLLECTOR & RESIDENTIAL STREETS

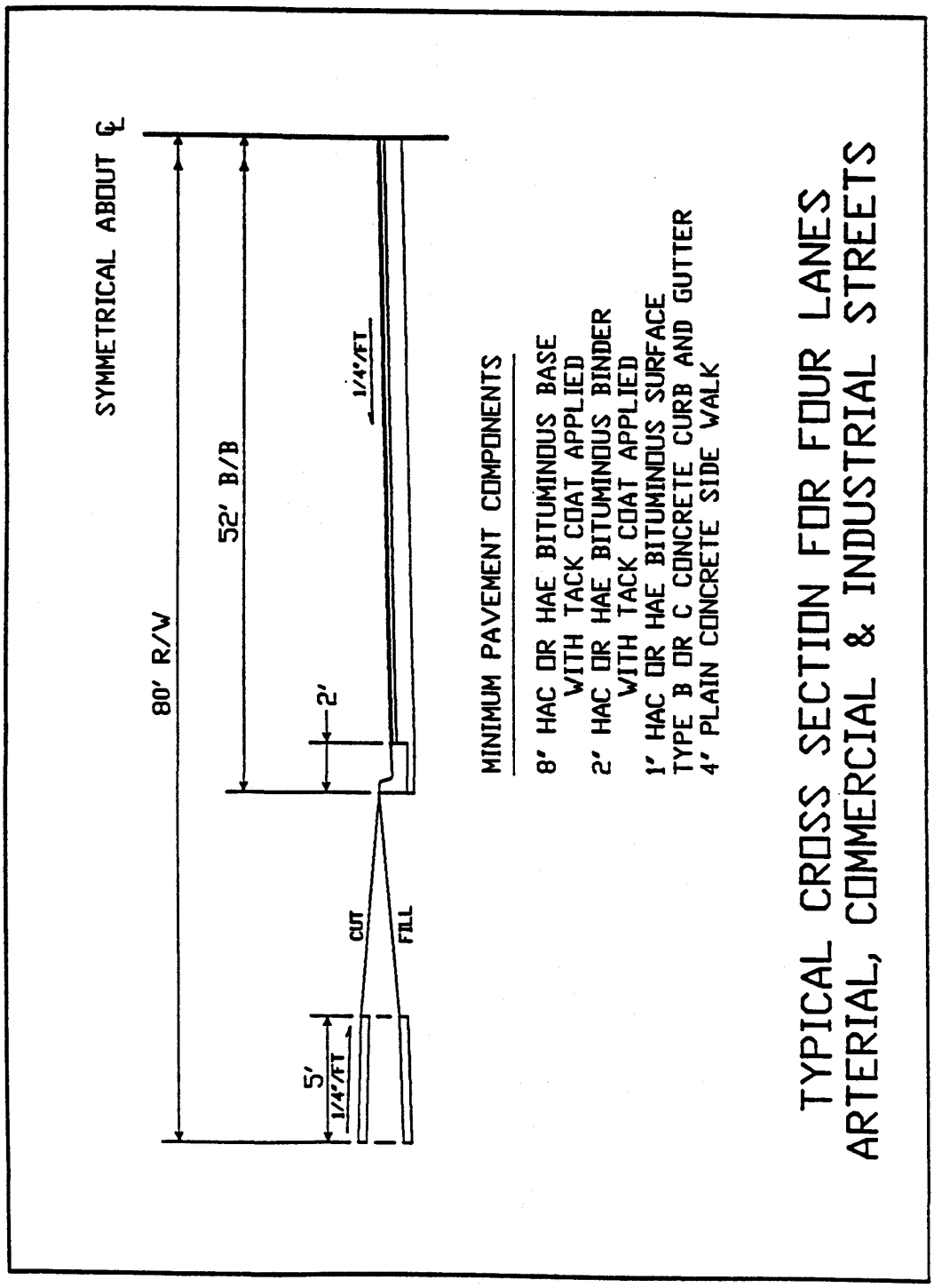
SYMMETRICAL ABOUT ℄
80' R/W
52' B/B
2'
1/4"/FT
5'
1/4"/FT
CUT
FILL
MINIMUM PAVEMENT COMPONENTS
8" HAC OR HAE BITUMINOUS BASE
WITH TACK COAT APPLIED
2" HAC OR HAE BITUMINOUS BINDER
WITH TACK COAT APPLIED
1" HAC OR HAE BITUMINOUS SURFACE
TYPE B OR C CONCRETE CURB AND GUTTER
4' PLAIN CONCRETE SIDE WALK
TYPICAL CROSS SECTION FOR FOUR LANES
ARTERIAL, COMMERCIAL & INDUSTRIAL STREETS

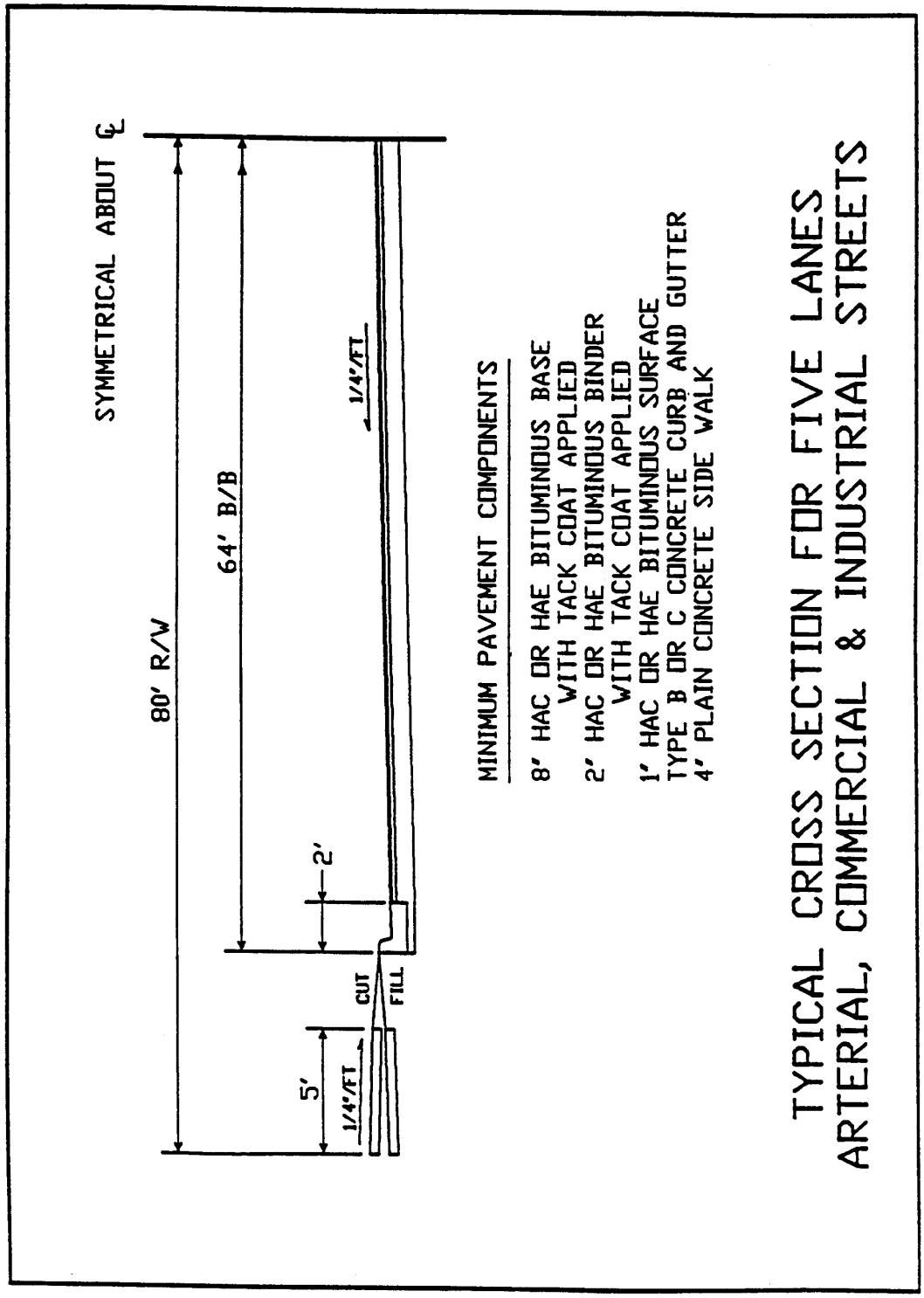
SYMMETRICAL ABOUT ℄
80' R/W
64' B/B
1/4"/FT
2'
5'
1/4"/FT
CUT
FILL
MINIMUM PAVEMENT COMPONENTS
8" HAC OR HAE BITUMINOUS BASE
WITH TACK COAT APPLIED
2" HAC OR HAE BITUMINOUS BINDER
WITH TACK COAT APPLIED
1" HAC OR HAE BITUMINOUS SURFACE
TYPE B OR C CONCRETE CURB AND GUTTER
4" PLAIN CONCRETE SIDE WALK
TYPICAL CROSS SECTION FOR FIVE LANES
ARTERIAL, COMMERCIAL & INDUSTRIAL STREETS

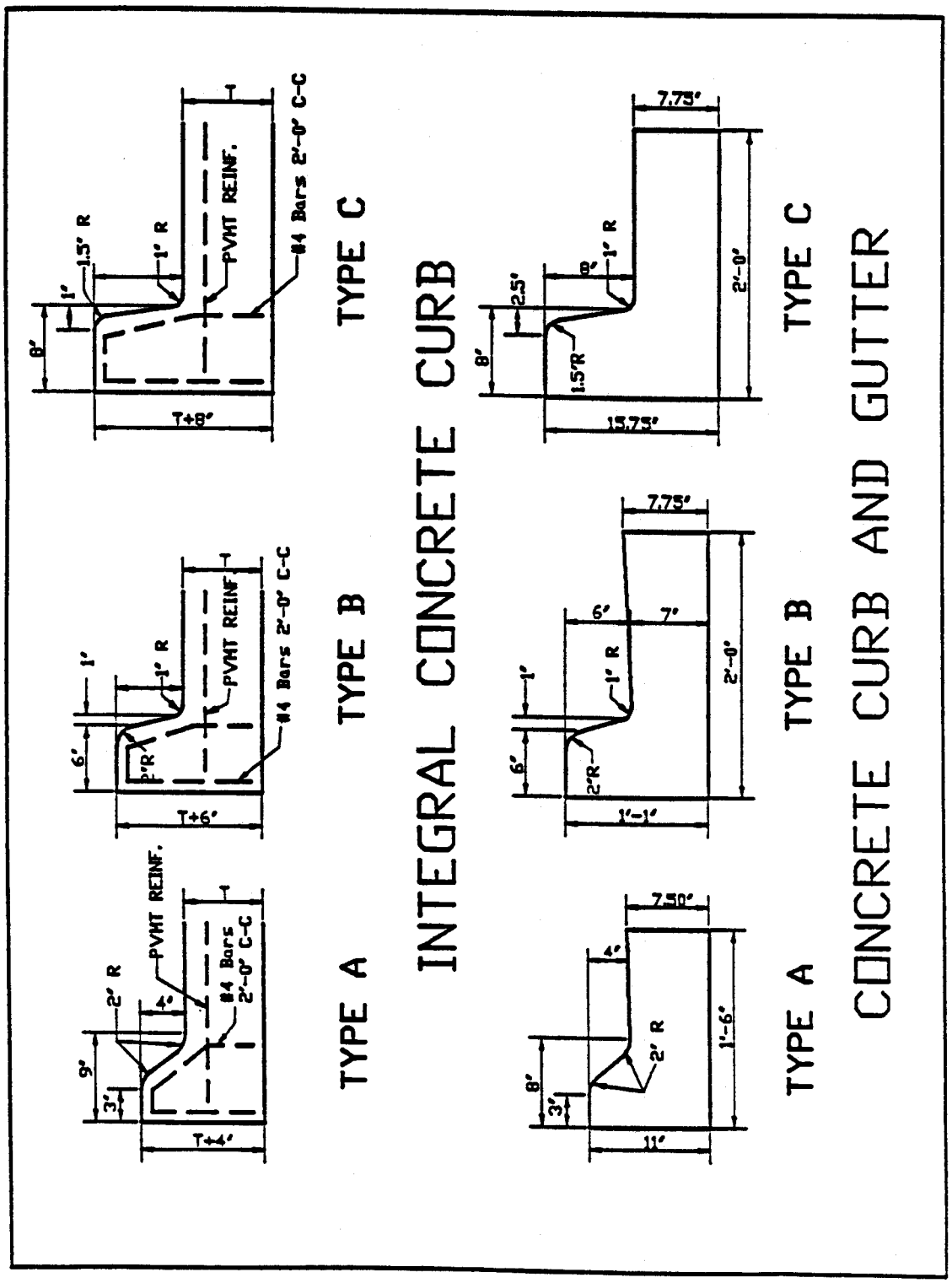
INTEGRAL CONCRETE CURB
TYPE A
TYPE B
TYPE C
T+4'
T+6'
T+8'
PVMT REINF.
#4 Bars 2'-0" C-C
2" R
1" R
1.5" R
CONCRETE CURB AND GUTTER
7.50'
7.75'
11'
1'-1'
15.75'
1'-6"
2'-0"
2" R
1.5"R

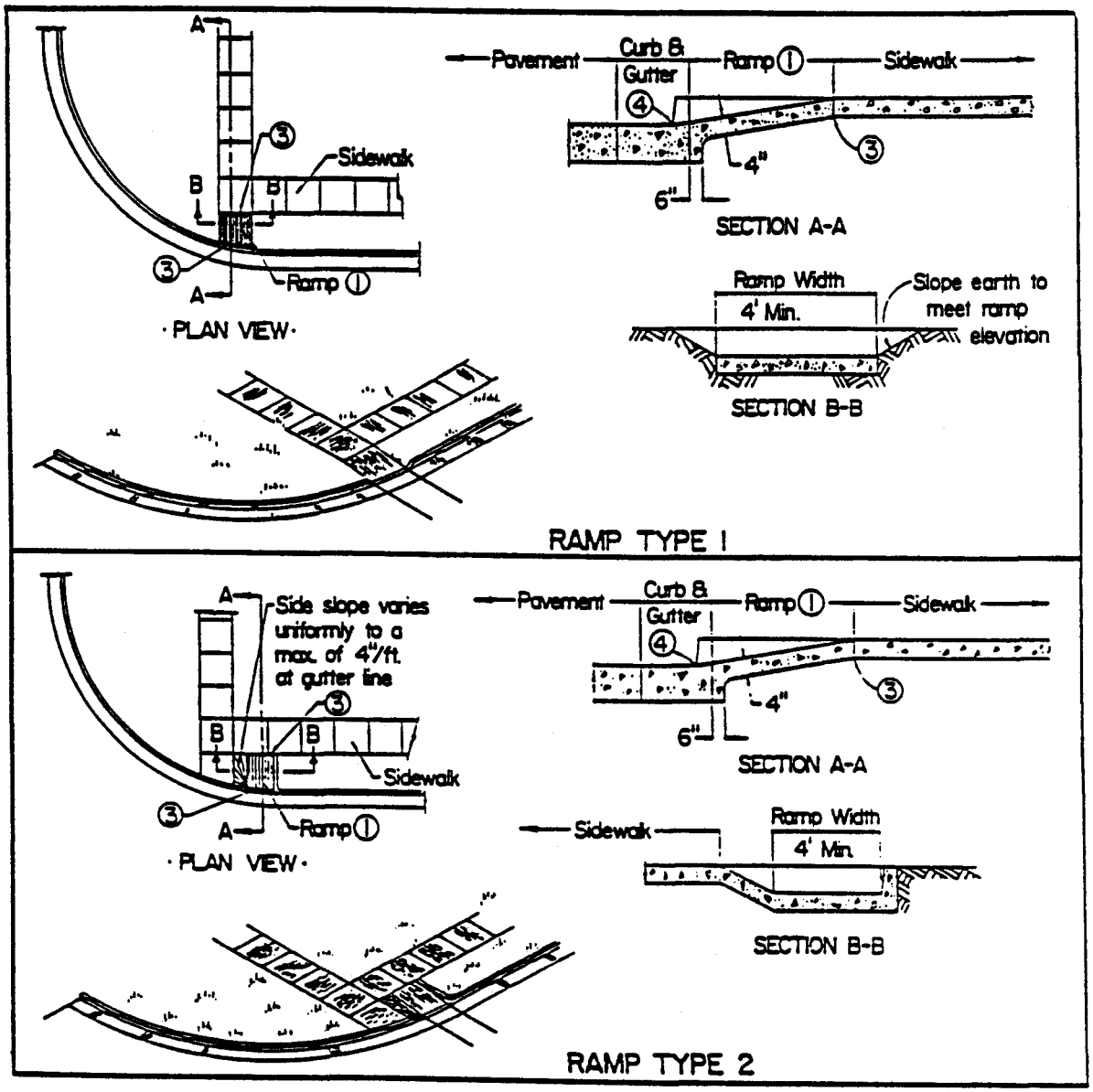
A
B
B
A
③
Sidewalk
Ramp ①
· PLAN VIEW ·
Pavement
Curb & Gutter
Ramp ①
Sidewalk
④
③
4"
6"
SECTION A-A
Ramp Width
4' Min.
Slope earth to meet ramp elevation
SECTION B-B
RAMP TYPE 1
A
Side slope varies uniformly to a max. of 4"/ft. at gutter line
③
B
B
Sidewalk
③
A
Ramp ①
· PLAN VIEW ·
Pavement
Curb & Gutter
Ramp ①
Sidewalk
④
③
4"
6"
SECTION A-A
Sidewalk
Ramp Width
4' Min.
SECTION B-B
RAMP TYPE 2

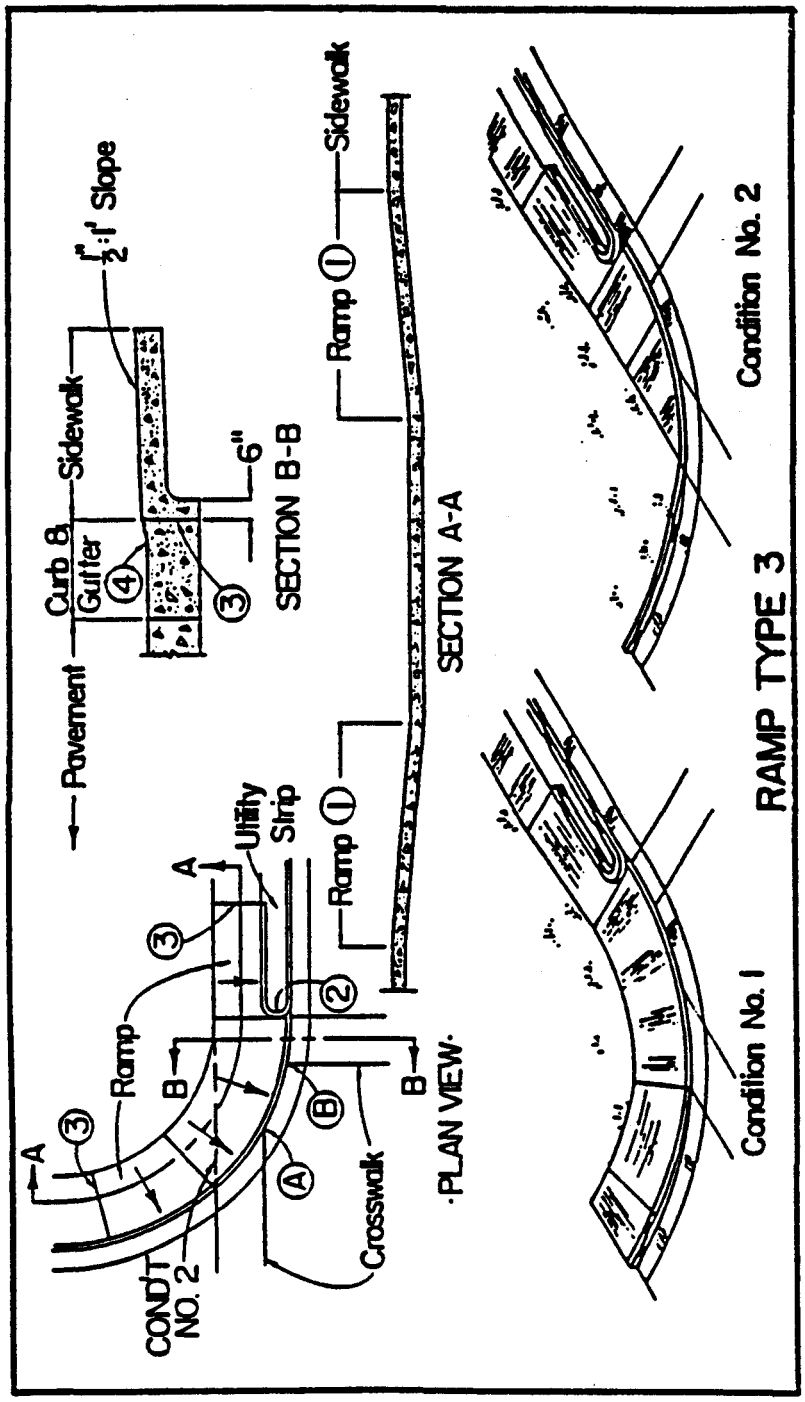

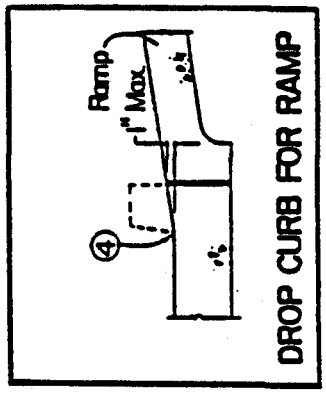

① Max. Ramp Slope 1":1'.

② Curb return required when utility strip is 4 feet or greater. For utility strips less than 4 feet, the area is to be surfaced with sidewalk within the ramp.

③ ½" expansion joint at back of curb line and at sidewalk line.

④ No bump permitted. Same slope as ramp and not to exceed 1" in height.

17.30.030 Minimum standards for alleys.

(A) Alleys with a minimum width or right-of-way of 20 feet may be required in all business, commercial, and industrial districts. Except where justified by unusual conditions, alleys will not be required in residential districts.

(B) All alleys shall be constructed by grading out all topsoil and other material not suitable for base course, shaping and compacting the exposed subgrade and filling the area with graded coarse aggregate. The compacted aggregate layer shall be a minimum of eight inches thick and 10 feet wide.

(C) Alleys shall be graded in a manner so that no water will stand in the alley or upon adjoining property. If the alley cannot be graded to provide adequate drainage, a sufficient number of catch basins shall be installed and connected to the storm drainage system to drain off excess water. [Code 1983 § 19-15; Code 2000 § 213.22].

Penalty, see HMC 1.05.170.

17.30.040 Minimum standards for easement.

(A) Where alleys are not provided, easements shall be provided for utilities, sewers, and storm drains. Such easements shall generally be located along rear or side lot lines, in which case a minimum width of 15 feet, seven and one-half feet on each side of the lot line, shall be provided. If such an easement is contained within a lot, the minimum width shall be 15 feet. Easements shall be laid out such that proper continuity may be had for utilities from block to block and within a block.

(B) Every plat shall contain a statement to the effect that all utility easements as dedicated on the face of the plat shall be kept free of all permanent structures and the removal of any obstruction by a utility company shall in no way obligate the utility company in damages or to restore the obstruction to its original form. [Code 1983 § 19-16; Code 2000 § 213.23].

Penalty, see HMC 1.05.170.

17.30.050 Minimum standards for recreation space.

(A) Commission-approved recreation space shall be provided in all subdivisions wherein the minimum net lot area is less than 12,000 square feet. The purpose of this space shall be to meet the immediate and future recreation needs of the subdivision's residents in a neighborhood setting. Recreation space shall be provided at the rate of 750 square feet per dwelling unit.

(B) Recreation space may be provided in a centrally located site, in distinctly separated sites, or connecting links between separated activity areas, or adjacent to other existing or proposed recreation spaces. The commission shall determine if the proposed space is suitable for the intended use.

(C) This requirement may be waived when, in the opinion of the commission, the applicant has satisfactorily demonstrated that he has provided alternative methods for meeting the recreational needs of his subdivision residents or the resulting recreation space is less than 10,000 square feet.

(D) All subdivisions with recreation space must contain acceptable covenants which, in the opinion of the commission, ensure adequate maintenance of those recreation spaces. [Code 1983 § 19-17; Code 2000 § 213.24].

Penalty, see HMC 1.05.170.

17.30.060 Minimum standards for sanitary sewers.

(A) The developer shall install or cause to be installed a system for the disposal of sanitary sewage in the subdivision by one of the following means:

(1) Public System. A complete sanitary sewer system which shall convey the sewage into an established wastewater treatment works, operated by a municipal or other public agency, at a point and in a manner approved in writing by that municipality or other agency. The plans for the complete installation of the sewage system showing all locations, materials, size, profiles and any connections thereto shall be prepared by a registered engineer at the expense of the developer and shall be approved by and meet the requirements of the affected municipality or other public agency.

(2) Septic Tank. If the developer submits acceptable evidence to the council and the plan commission that connection to a public sanitary sewage system is impractical due to the low density of the proposed development, lack of planned or limited capacity of existing public or quasi-public sanitary systems, then the commission may permit the use of private sanitary facilities. Private

sanitary facilities such as a septic tank and absorption field or other approved treatment system must be laid out in accordance with the standards and approval of the commission, council, Lake County board of health and the state Board of Health.

(B) Sanitary sewers shall be designed and constructed in accordance with Chapter 20 of the Recommended Standards for Sewage Works (also known as the Ten States Standards) published by Health Education Services of Albany, New York. The sewer design shall be submitted to the Indiana Department of Environmental Management and the Highland sanitary district for review, if directed by the commission.

(C) Sewage pumping stations, where required, shall be designed and constructed in accordance with Chapter 30 of the Recommended Standards for Sewage Works (also known as the Ten States Standards) published by Health Education Services of Albany, New York. The pump station design shall be submitted to the Indiana Department of Environmental Management and the Highland sanitary district for review, if directed by the commission.

(D) Septic and other private sewage systems shall be designed and constructed in accordance with the Recommended Standards for Individual Sewage Systems published by Health Education Services of Albany, New York.

(E) In addition to these minimum standards, all other requirements of Chapters 9.10 and 9.15 HMC shall apply. [Code 1983 § 19-18; Code 2000 § 213.25].

Penalty, see HMC 1.05.170.

17.30.070 Minimum standards for water supply.

(A) The developer shall install or cause to be installed a water supply system for the subdivision connected to the public water supply in conformance with the Waterworks Rules and Regulations.

(B) A complete water main system including fire hydrants shall be installed which is approved by the town. The plans for the complete installation showing size, location, depth, material, and all connections thereto, shall meet the requirements and receive approval of the council, water board and commission.

(C) The design of the water supply system shall follow the guidelines published in Recommended Standards for Water Works published by Health Education Services of Albany, New York. The water system design shall be submitted to the Indiana State Board of Health and the Highland water board for review, if directed by the commission.

(D) A private well may be approved for a one-lot subdivision, providing that the developer submits acceptable evidence to the council and commission that connection to the public water supply system is impractical. A private well may be developed in accordance with AWWA Standard A-100. All private wells must be approved by the Lake County board of health and the Indiana State Board of Health.

(E) In addition to these minimum standards, all other requirements of this chapter and Chapters 10.05 and 12.05 HMC and any rules or regulations promulgated by the board of waterworks directors shall apply. [Amended during 2012 recodification. Code 1983 § 19-19; Code 2000 § 213.26].

Penalty, see HMC 1.05.170.

17.30.080 Materials of construction.

All materials used for construction of public facilities shall be new, of first-class quality, meeting or exceeding the standard or specification cited below.

(A) Aggregates. Fine and coarse aggregates used in concrete or asphalt shall comply with IDOH-SS Subsection 903.

(B) B-Borrow or Special Borrow for Structures. Fill and backfill material around and under structures shall comply with IDOH-SS Subsection 211.

(C) Concrete. Materials and procedures used in preparing concrete mixes shall comply with IDOH-SS Articles 702.01 through 702.11, except that fly ash may only be used with written approval of the building inspector.

(D) Asphalt Products. Materials and procedures for preparing asphalt mixes shall comply with IDOH-SS Subsection 401.

(1) HAE, hot asphalt emulsion, pavement materials shall comply with IDOHSS Subsection 402.

(2) HAC, hot asphalt concrete, pavement materials shall comply with IDOHSS Subsection 403.

(3) Prime coat shall comply with IDOH-SS Subsection 408.

(4) Tack coat shall comply with IDOH-SS Subsection 409.

(E) Sewer and Drainage Pipe.

(1) Reinforced concrete pipe shall comply with ASTM Specification C-76 and the joints with C-443. Reinforced concrete arch pipe shall comply with ASTM Specification C-506 and reinforced concrete elliptical pipe with C-507.

(2) Vitrified clay pipe and extra strength vitrified clay pipe shall comply with ASTM Specification C-700 and the joints with C-425.

(3) Precast concrete manhole sections shall comply with ASTM Specification C-478. Manholes shall have a minimum inside diameter of 48 inches and have a medium or heavy duty frame and lid. Provide a precast flat top section if the manhole is less than six feet deep and an eccentric cone section if the manhole is six feet or more in depth.

(4) Precast concrete utility vaults shall comply with ASTM Specification C-858.

(5) Polyvinyl chloride (PVC) gravity sewer pipe shall comply with ASTM Specification D-3034 with a minimum rating of SDR 35 (standard dimensional ratio). The joints shall comply with ASTM Specification D-3212.

(6) Polyvinyl chloride (PVC) pressure pipe from four- to 12-inch diameter shall comply with AWWA Standard C-900 and from 14- to 36-inch diameter shall comply with AWWA Standard C-905.

(7) Ductile iron pipe shall comply with AWWA Specification C-151 and joints and gaskets with C-1111. All exposed ductile iron pipe shall be flanged while buried ductile iron pipe may be push-on or mechanical joint.

(8) Corrugated metal pipe for culverts shall be fabricated of hot-dip galvanized sheet steel conforming to ASTM Specification A-444. Corrugated metal pipe and pipe arches shall comply with IDOH-SS article 907.02.

(F) Storm Drains. Storm drains, inlets and catch basins shall be constructed of precast concrete components, similar in construction to precast manholes.

(1) Inlets shall be a minimum of 24 inches in inside diameter and 30 inches deep with a four-inch-thick bottom.

(2) Catch basins shall be at least 36 inches in inside diameter and 78 inches deep with a six-inch-thick base.

(3) Each storm drain shall have a heavy duty cast or ductile iron frame and grate of appropriate shape for its location. The grate shall be constructed with bicycle safe openings and have sufficient open area to accept the runoff calculated for its collection area in the drainage plan.

(G) Joint Filler. Joint filler for expansion joints in concrete walk and curb shall comply with IDOH-SS article 905.01.

(H) Water Supply Pipe.

(1) Ductile iron pipe (for water supply mains) shall comply with AWWA Specification C-151 with cement mortar lining conforming to AWWA C-104 and joints and gaskets conforming to AWWA C-111. Fittings for ductile iron pipe shall comply with AWWA Specification C-110 or C-153.

(2) Type K copper tubing for water service lines shall be soft temper conforming to ASTM Specification B88 with forged bronze compression fittings conforming to ANSI B16.22.

(3) Whenever soil conditions are conducive to corrosion, polyethylene encasement shall be required. Polyethylene encasement for ductile iron piping shall meet the requirements of AWWA C105. Polyethylene encasement is required for all piping and valves installed in any type of predominant surrounding soils, except sand. Polyethylene encasement is not required where the predominant surrounding native soil is sand.

(4) The requirement for polyethylene encasement may also be waived at the option of the town, subject to submission of acceptable soil testing results performed and evaluated in accordance with the soil-test evaluation procedure in Appendix A of AWWA C105.

(I) Water Valves. Valves for water supply shall conform to the AWWA standards listed below.

(1) All water line valves of eight-inch and greater diameter shall be resilient seated butterfly valves in accordance with AWWA C-504.

(2) All water line valves less than eight inches in diameter, and valves used on tapping

tees, shall be resilient seated gate valves conforming to AWWA C-509.

(3) Fittings for service lines shall comply with AWA C-800.J. Fire hydrants: Dry barrel fire hydrants shall meet the requirements of this code. [Ord. 1159 § 1, 2000. Code 1983 § 19-20; Code 2000 § 213.27].

Penalty, see HMC 1.05.170.

17.30.090 Construction requirements.

(A) Storm Drains and Sewers.

(1) Manholes, inlets and catch basins shall be constructed and installed in accordance with IDOH-SS Subsection 720.

(2) Culverts and storm sewers shall be installed in accordance with IDOH-SS Subsection 715.

(3) Jacked pipe shall be installed in accordance with IDOH-SS Subsection 717.

(4) Arches and pipe arches shall be installed in accordance with IDOH-SS Subsection 717.

(B) Sanitary Sewers.

(1) Manholes shall be constructed and installed in accordance with IDOH-SS Subsection 720.

(2) Sanitary sewers shall be installed in accordance with IDOH-SS Subsection 715. Construction of sanitary sewers shall also conform to Chapter 20 of the Recommended Standards for Sewage Works (also known as the Ten States Standards) published by Health Education Services of Albany, New York.

(3) Jacked pipe shall be installed in accordance with IDOH-SS Subsection 717.

(4) Sanitary sewer construction shall also conform to all provisions of Chapters 9.10 and 9.15 HMC.

(C) Water Supply.

(1) All pipes, valves and fittings for water supply shall be handled, stored and installed according to the manufacturer's instructions when specific standards are not identified. The final water supply installation shall be disinfected in accordance with AWWA Specification C-651.

(2) Ductile iron pipe and appurtenances shall be installed in accordance with AWWA Specification C-600.

(3) Service lines for water supply shall be installed in accordance with AWWA Specification C-800.

(4) Private wells for water supply shall be disinfected before being placed in service in accordance with AWWA Specification C-654.

(5) Water line construction shall also conform to all provisions of this chapter and Chapters 10.05 and 12.05 and any rules or regulations promulgated by the board of waterworks directors.

(D) Subgrade Preparation.

(1) In cut sections, the subgrade shall be prepared in accordance with the applicable paragraphs 207.01 through 207.05 of IDOH-SS Subsection 207.

(2) In fill sections, the subgrade shall be prepared in accordance with the applicable paragraph 207.06 of IDOH-SS Subsection 207.

(E) Curb and Gutter. Integral concrete curbs and concrete curb and gutter shall be constructed in accordance with IDOH-SS Subsection 605.

(F) Sidewalks, Curb Ramps and Steps. Sidewalks, curb ramps and steps shall be constructed in accordance with IDOH-SS Subsection 604.

(G) Asphalt Pavement. Asphalt or bituminous pavements shall be constructed in accordance with the applicable subsections of IDOH-SS Section 400.

(H) Concrete Pavement. Concrete pavement shall be constructed in accordance with the applicable subsections of IDOH-SS Section 500. [Amended during 2012 recodification. Code 1983 § 19-21; Code 2000 § 213.28].

Penalty, see HMC 1.05.170.

ATTACHMENT N

LIFT STATION CHECKLIST

March 2019; Revised June 2019; Revised March 2020; Revised February 2021

HIGHLAND SANITARY DISTRICT			DATE:
PUMP STATION CHECKS			
LOCATION	TIME	INTIALS	PROBLEMS TO REPORT
WATER PLANT:			
HAMMOND METER VAULT:			
815T ST. STORM & SANITARY:			
INDIANAPOLIS STORM STA.:			
LINCOLN ST. SANITARY:			
37TH Pl. SANITARY:			
41 WATER TOWER:			
DYER METER VAULT:			
EXPRESS DRIVE STORM N & S:			
SOUTH KENNEDY AVE SAN:			
GEORGETOWNE SANITARY:			
415T ST. SANITARY:			
MARTHA ST. STORM STA.:			
SOUTH GRACE ST. SANITARY:			
PETTIT PARK SANITARY:			
ALTI CT SANITARY:			
RIDGE RD. WATER TOWER:			
JOHNSTON & LAPORTE SAN:			
NORTH DRIVE STORM STA.:			
NORTH 5TH STORM & SAN.:			
5TH ST. & LAPORTE TANK:			

HIGHLAND SANITARY DISTRICT	WEEKLY CHECKS				
SANITARY STATION:					
MONTH: YEAR:	DATE				
CHECKS TO BE CONDUCTED	1	2	3	4	5
ALARMS SECURE.					
BREAKERS ON.					
BUILDING AND GROUNDSCLEAN.					
BUILDING SECURE FROM ANIMALS.					
CHECK AIR COMPRESSOR.					
CHECK FOR PROPER GALLONS PER MINUTE WITH SCADATA.					
CHECK HEATER IN BACKFLOW BUILDING. {WINTER).					
CHECK PUMPS FOR NOISE, VIBRATION AND CHECK VALVES OPENING.					
CHECK TRANSDUCER AND LEVEL MISSLE FOR DEBRIS, MONITOR WETWELL FOR SILT					
CHECK VALVES CLOSING AND HOLDING BACK REVERSE FLOW , SPRINGS IN PLACE					
CONTROLLER WORKING.					
DEHUMIDIFIER WORKING.					
ELECTRODE BOWLS CLEAN.					
ELEVATOR WORKING.					
FLOATS CLEAN.					
GENERATOR - AUTOMATIC ON, CHECK SHEET, SCHEDULED TO RUN FOR 30 MINS.					
HATCHES SECURE AND BACKFLOW BUILD.					
HEATING, LIGHTS AND VENTILATION SYSTEM WORKING.					
MECHANICAL SEALS - FILTERS FLOWING.					
MONITOR KNIFE VALVES FOR LEAKS.					
MONITOR ODOR AT STATION AND CHECK ODOR MACHINE.					
PUMPS - AUTOMATIC ON, CHECK VALVE OPENING, MONITOR NOISE & VIBRATION, OIL LEVELS FULL, ROTATE.					
SCADATA COMMUNICATING WITH WATER PLANT.					
SEAL FILTERS OK.					
SETUP SAMPLES PER HAMMOND SCHEDULE.					
START BYPASS PUMP AND LOG FUEL LEVELS.					
STATION DRY AND CLEAN.					
STATION, GENERATOR, FENCE, BUILDING, LOCKED AND SECURE.					
SUMP PUMP LOWER BEARING - ADD OIL					
SUMP PUMP WORKING IN FLOW METER PIT.					
VACUUM PUMP BOWLS DRY.					

HIGHLAND SANITARY DISTRICT		MONTHLY, 3MO, 6MO, AND YEARLY CHECKS
SANITARY STATION:		
YEAR:		
CHECKS TO BE CONDUCTED	FREQUENCY	DATES
CATHADIC PROTECTION METER - CHECK.	MO	
CHECK FOR DEBRIS IN RAINGUAGE.	MO	
FILTERS - CHANGE ON MECHANICAL SEALS.	MO	
SAMPLE MACHINE - CALIBRATE TO 100 MLS.	MO	
TEST ONE ALARM, CHANGING MONTHLY.	MO	
TRANSDUCER - CHECK FOR DEBRIS.	MO	
CHECK VALVES - GREASE.	3-MO	
ELECTRICAL CONNECTIONS - INSPECT	3-MO	
ELEVATOR MOTOR - CHECK OIL LEVEL	3-MO	
RIVER LEVEL SENSOR - CHECK FOR DEBRIS.	3-MO	
WETWELL - MONITOR FOR DEBRIS AND SILT.	3-MO	
ELECTRODE BOWLS - CLEAN	6-MO	
FLOW METER - CALIBRATE	6-MO	
GENERATOR - RUN UNDER LOAD FOR 2 HOURS.	6-MO	
GREASE CHECK VALVES, MOTORS, PUMPS	6-MO	
HOLDING TANK - CHECK FOR SILT, WASH OUT TANK	6-MO	
MOTORS - CHECK AMPERAGE.	6-MO	
SAMPLE TUBING - CHANGE	6-MO	
SCADA BATTERY BACKUP - CHECK AGE.	6-MO	
VALVES - EXERCISE ON SUCTION & DISCHARGE LINES	6-MO	
GENERATOR TRANSFER SWITCH - CHANGE 9 VOLT BATTERIES.	YR	
GENERATOR - SERVICE.	YR	
PUMP MOTORS - CHANGE OIL	YR	
PUMPS - HAVE GASVODA'S CALIBRATE CUTTING BLADES.	YR	
TEST RPZ BACKFLOW DEVICE.	YR	
VACUUM OUT WETWELL. (OR AS NEEDED).	YR	
WASH OUT TANK.	YR	

HIGHLAND SANITARY DISTRICT DAILY SANITARY PUMP HOURS		SUN	MON	TUE	WED	THUR	FRI	SAT
WEEK OF:		PUMP TIME						
81ST St. SANITARY	PUMP 1							
	PUMP 2							
	PUMP 3							
NORTH 5TH ST. SANITARY	PUMP 1							
	PUMP 2							
	PUMP 3							
SOUTH KENNEDY AVE.	PUMP 1							
	PUMP 2							
37TH PL. EQ TANK	PUMP 1							
	PUMP 2							
LINCOLN ST.	PUMP 1							
	PUMP 2							
41ST ST.	PUMP 1							
	PUMP 2							
SOUTH GRACE ST.	PUMP 1							
	PUMP 2							
JOHNSTON & LAPORTE ST.	PUMP 1							
	PUMP 2							
PETTIT PARK	PUMP 1							
	PUMP 2							
GEORGETOWNE	PUMP 1							
	PUMP 2							
ALTI CT.	PUMP 1							
	PUMP 2							

ATTACHMENT O

WEEKLY GENERATOR INSPECTION FORM

March 2019; Revised June 2019; Revised March 2020; Revised February 2021

HIGHLAND SANITARY DISTRICT - GENERATOR CHECK FOR SANITARY STATION:

WEEK OF:	INSPECTED BY	OIL LEVEL	COOLANT LEVEL	FUEL LEVEL	BLOCK HEATER TEMPERATURE	BATTERY CHARGER VOLTAGE	BATTERY FLUID LEVEL	CHECK HOSES FOR LEAKS AND CRACKS	CHECK BELTS FOR WEAR AND TIGHTNESS	REPLENISH RODENT BAIT STATIONS	LOAD	ENGINE HOURS
1/6/2019												
1/13/2019												
1/20/2019												
1/27/2019												
2/3/2019												
2/10/2019												
2/17/2019												
2/24/2019												
3/3/2019												
3/10/2019												
3/17/2019												
3/24/2019												
3/31/2019												
4/7/2019												
4/14/2019												
4/21/2019												
4/28/2019												
5/5/2019												
5/12/2019												
5/19/2019												
5/26/2019												
6/2/2019												
6/9/2019												
6/16/2019												
6/23/2019												
6/30/2019												

HIGHLAND SANITARY DISTRICT - GENERATOR CHECK FOR SANITARY STATION:

WEEK OF:	INSPECTED BY	OIL LEVEL	COOLANT LEVEL	FUEL LEVEL	BLOCK HEATER TEMPERATURE	BATTERY CHARGER VOLTAGE	BATTERY FLUID LEVEL	CHECK HOSES FOR LEAKS AND CRACKS	CHECK BELTS FOR WEAR AND TIGHTNESS	REPLENISH RODENT BAIT STATIONS	LOAD	ENGINE HOURS
7/7/2019												
7/14/2019												
7/21/2019												
7/28/2019												
8/4/2019												
8/11/2019												
8/18/2019												
8/25/2019												
9/1/2019												
9/8/2019												
9/15/2019												
9/22/2019												
9/29/2019												
10/6/2019												
10/13/2019												
10/20/2019												
10/27/2019												
11/3/2019												
11/10/2019												
11/17/2019												
11/24/2019												
12/1/2019												
12/8/2019												
12/15/2019												
12/22/2019												
12/29/2019												

ATTACHMENT P

TANK DEBRIS MEASURING AND CLEANING SOP & SCHEDULE

March 2019; Revised June 2019; Revised March 2020; Revised February 2021

Appendix P
Standard Operating Procedure
Tank (Wet Well & EQ) Debris Measuring and Cleaning

Tank Debris Measuring

1. Obtain measuring rod.
2. Access wet well.
3. Drop measuring rod into wet well.
4. Determine resistance level indicating debris level:
    a. EQ – debris will be visibly exposed in tank that is normally dry.
    b. Wet Well – debris will be submerged.
5. Repeat Measurement process 2-4 times depending on wet well size.
6. Calculate debris level based on known depth of wet well.
7. Clean/disinfect measuring rod for future use.
8. Date/Log debris level.

Tank Cleaning

1. Deploy vac truck to wet well site.
2. Modify pump settings as required.
3. Engage vac truck suction.
4. Fill vac truck tank.
5. Transport to Hammond Sanitary District WWTP.
6. Dispose of wastes per Hammond procedures.
7. Return to wet well site as necessary to remove debris to the extent possible.

HIGHLAND SANITARY DISTRICT	TANK (WET WELL & EQ) DEBRIS MEASUREMENT AND CLEANING															
	DATE					DATE										
STORM TANKS	**DEBRIS MEASUREMENT INTERVAL**					**APPROX. CLEANING INTERVAL**										
NORTH DRIVE WET WELL	Semi-Annually					5-YR										
NORTH 5TH ST. NORTH WET WELL	Semi-Annually					5-YR										
NORTH 5TH ST. SOUTH WET WELL	Semi-Annually					5-YR										
81ST ST. WET WELL	Semi-Annually					10-YR										
INDIANAPOLIS BLVD. WET WELL	Semi-Annually					5-YR										
SANITARY TANKS	**DEBRIS MEASUREMENT INTERVAL**					**APPROX. CLEANING INTERVAL**										
NORTH 5TH ST. WET WELL	Semi-Annually					1-YR										
81ST ST. WET WELL	Semi-Annually					5-YR										
LINCOLN ST. WET WELL	Semi-Annually					1-YR										
41ST ST. WET WELL	Semi-Annually					10-YR										
SOUTH GRACE ST. WET WELL	Semi-Annually					10-YR										
PETTIT PARK WET WELL	Semi-Annually					3-YR										
JOHNSTON & LAPORTE WET WELL	Semi-Annually					10-YR										
GEORGETOWNE WET WELL	Semi-Annually					10-YR										
SOUTH KENNEDY AVE WET WELL	Semi-Annually					5-YR										
ALTI CT. WET WELL	Semi-Annually					5-YR										
5TH ST. & LAPORTE EQ TANK	Semi-Annually					1-YR										
36th PLACE HOLDING TANK	Semi-Annually					1-YR										
NOTE: FREQUENCY CAN CHANGE BASED ON OPERATORS DECISION.																

HIGHLAND SANITARY DISTRICT	TANK (WET WELL & EQ) DEBRIS MEASUREMENT AND CLEANING															
	DATE					DATE										
STORM TANKS	**DEBRIS MEASUREMENT INTERVAL**					**APPROX. CLEANING INTERVAL**										
NORTH DRIVE WET WELL	Semi-Annually					5-YR										
NORTH 5TH ST. NORTH WET WELL	Semi-Annually					5-YR										
NORTH 5TH ST. SOUTH WET WELL	Semi-Annually					5-YR										
81ST ST. WET WELL	Semi-Annually					10-YR										
INDIANAPOLIS BLVD. WET WELL	Semi-Annually					5-YR										
SANITARY TANKS	**DEBRIS MEASUREMENT INTERVAL**					**APPROX. CLEANING INTERVAL**										
NORTH 5TH ST. WET WELL	Semi-Annually					1-YR										
81ST ST. WET WELL	Semi-Annually					5-YR										
LINCOLN ST. WET WELL	Semi-Annually					1-YR										
41ST ST. WET WELL	Semi-Annually					10-YR										
SOUTH GRACE ST. WET WELL	Semi-Annually					10-YR										
PETTIT PARK WET WELL	Semi-Annually					3-YR										
JOHNSTON & LAPORTE WET WELL	Semi-Annually					10-YR										
GEORGETOWNE WET WELL	Semi-Annually					10-YR										
SOUTH KENNEDY AVE WET WELL	Semi-Annually					5-YR										
ALTI CT. WET WELL	Semi-Annually					5-YR										
5TH ST. & LAPORTE EQ TANK	Semi-Annually					1-YR										
36th PLACE HOLDING TANK	Semi-Annually					1-YR										
NOTE: FREQUENCY CAN CHANGE BASED ON OPERATORS DECISION.																

ATTACHMENT Q

LOCATION OF COLLECTION SYSTEM TROUBLE SPOTS

March 2019; Revised June 2019; Revised March 2020; Revised February 2021

Highland Sanitary District
Location of Collection System Trouble Spots

No.	Address	Line-Segment (MH)	Reason
1	3924 Wirth Rd.	3025 - 3019	Grease
2	45th & Prairie	7367 - 7366	Low Flow
3	Lincoln & 38th	7172- 7169	Low Flow
4	9000 Blk. Woodward	7209 - 7206	Low Flow
5	9631 5th Pl.	4211- 4212	Grease
6	3015 44th St.	4204 - 4206	Low Flow
7	3208 Farmer	4186 - 4187	Low Flow
8	Duluth	1064 - 1062	Long Run-Low Flow
9	Delaware Pl.	4265 - 4269	Long Run
10	9104 Wildwood	7214 - 7215	Low Flow
11	Schnieder	7073 - 7070	Grease
12	9600 Farmer Dr.	4167 - 4173	Low Flow
13	2818 100th St.	4316- 4317	Low Flow
14	2900 45th	4253 - 4251	Grease
15	Highway Ave. & 2nd St.	7133 - 7132	Grease
16	10445 Indpls. Blvd.	8100 - 8101	Grease
17	2000 45th (rear lot)	7423 - 7425	Grease
18	2562 45th	7384A - 7384	Grease
19	3325 45th (in alley)	4198 - 4200	Grease
20	9617 Farmer Dr. (behind Subway)	4176- 4179	Grease

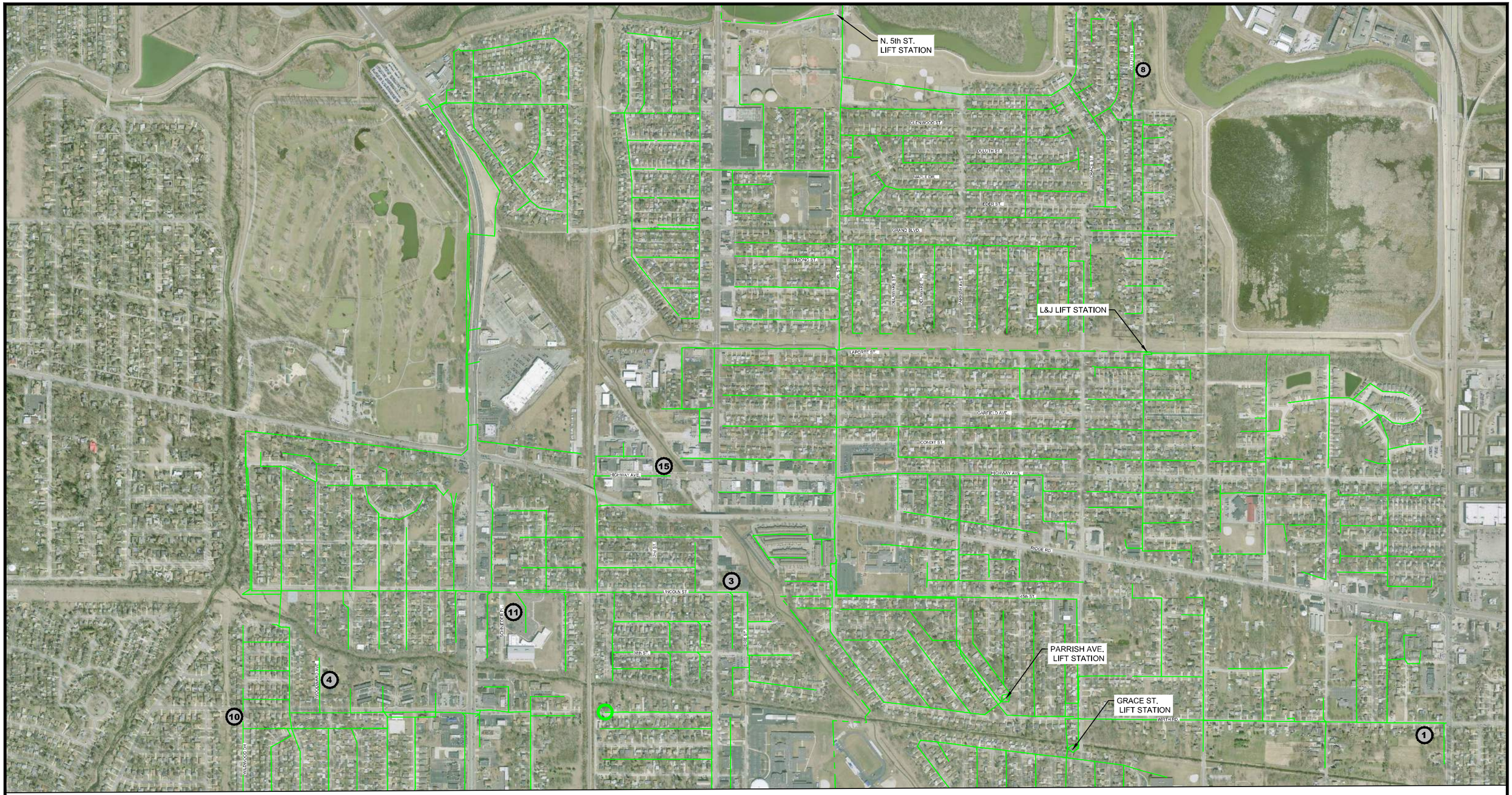

LEGEND

(#) SEWER HOT SPOTS

EXISTING SEWERS

0 1000'

500'

COMMONWEALTH ENGINEERS, INC.

7256 Company Dr.
Indianapolis, IN 46237 (317) 888-1177

104 N. Main St.
Crown Point, IN 46307 (219) 900-9177

1419 W. Lloyd Expy.
Suite 401
Evansville, IN 47710 (812) 474-1177

9604 Coldwater Rd.
Suite 203
Fort Wayne, IN 46825 (260) 494-3223

TOWN OF HIGHLAND

HIGHLAND CMOM
NORTH COLLECTION SYSTEM HOT SPOTS
ATTACHMENT Q-1

FIGURE

Q-1

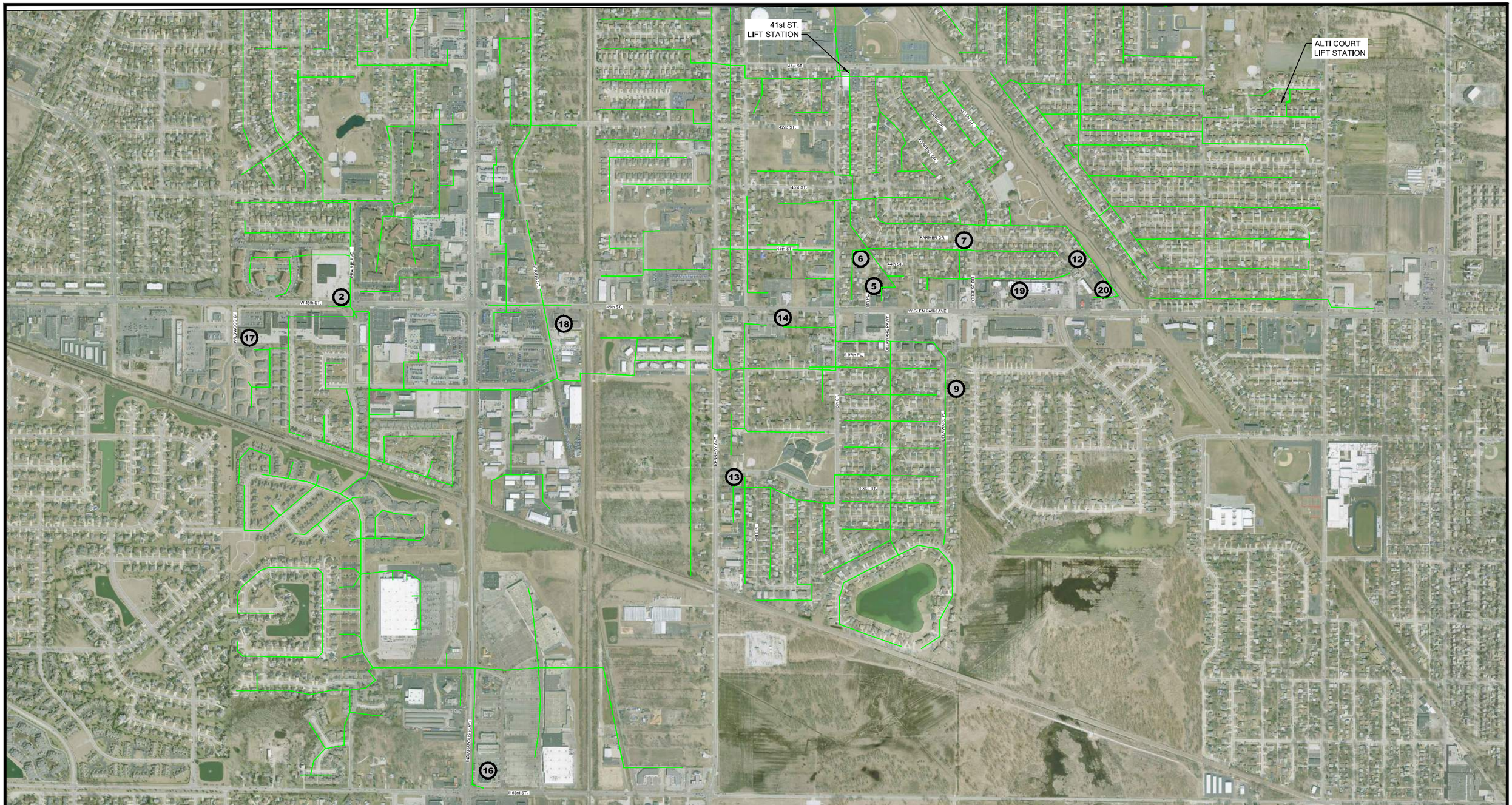

LEGEND

SEWER HOT SPOTS

EXISTING SEWERS

0 1000'

500'

COMMONWEALTH ENGINEERS, INC.

7256 Company Dr, Indianapolis, IN 46237 (317) 888-1177

104 N. Main St, Crown Point, IN 46307 (219) 900-9177

1419 W. Lloyd Expy, Suite 401 Evansville, IN 47710 (812) 474-1177

9604 Coldwater Rd, Suite 203 Fort Wayne, IN 46825 (260) 494-3223

TOWN OF HIGHLAND

HIGHLAND CMOM
SOUTH COLLECTION SYSTEM HOT SPOTS
ATTACHMENT Q-2

FIGURE

Q-2

ATTACHMENT R

EXAMPLE DOOR HANGERS

March 2019; Revised June 2019; Revised March 2020; Revised February 2021

Example Door Hangers

NOTICE

Smoke Testing Sewers

Our work crews will be conducting smoke tests of sanitary sewers in your area on:

_____

These tests will assist us in locating breaks and defects in the sewer system. During the test, YOU MAY SEE SMOKE COMING FROM VENT STACKS ON BUILDINGS OR FROM HOLES IN THE GROUND. Don't be alarmed. The smoke has no odor, is non-toxic, non-staining, does not create a fire hazard, and will dissipate in a few minutes.

Before we conduct the smoke test, please pour water into your basement floor drains and into any unused sinks. This will seal the drain traps so that smoke will not enter your building through the drain.

(continued on reverse side)

If smoke should enter your building during the test, it probably means that there are defects in the plumbing that could allow DANGEROUS SEWER GAS to enter. Note the location of the smoke and call the number at the bottom of this card to arrange a meeting with our inspector. Open doors and windows to ventilate any smoke that enters the building.

Please notify us before we conduct the test if you have any of the following situations:

- Dogs, birds or other pets that will be confined alone in the building during the test
- A person who will be alone and is an invalid or sleeping during the test
- Any individuals with respiratory problems who will be in the building
- Elderly persons who will be alone and might be alarmed or confused if they see smoke

If you have any of these situations or have questions regarding the smoke test, call:

Example Door Hangers

Your Sewer Access Will Temporarily Be Shut Off!

Insituform
an AEGION company

In the next few days, we will be in the neighborhood reconstructing certain sewer pipes in need of repair.

Insituform is under contract by your local government. The Insituform® process repairs pipes without digging up your neighborhood. This helps to preserve your property and minimize any inconveniences.

Please bear with us as we repair your sewer system. We apologize for any equipment noise which may be created.

While the work is being performed, your sewer service connection will be temporarily sealed off (see Figure 3). **We need your cooperation to avoid backup of sewer water into your residence or business by preventing water from escaping through any drain during the specified time period.**

1. Do not wash clothes or dishes.
2. Do not take showers or baths.
3. Do not flush toilets.
4. Turn off sump pumps which are connected to the sewer service.

If any problem occurs with your sewer service during this rehabilitation process, please visit one of our on-site representatives. If you have any questions after completion of the project, please call the local representative listed below, not a plumber.

Insituform is sending this handout to provide advance notice before beginning actual work. Please do not use water during the hours of:

_____ to _____ on _____
Day and Date

_____
Phone No.

_____
Local Representative

For additional questions regarding our process, please visit www.insituform.com or call our headquarters at 636-530-8000.

Thank you for your cooperation.
We have enjoyed being your neighbor—if only for a day.
DOC ID: COR/FRM-OPR-10 EFF. DATE: 03/01/01
APPROVAL: CO. MGMT. REP: ON FILE

AB1281 Revised 07/14 © 2014 Aegion Corporation

Please Take Note...

You may detect odors (like plastic or glue) from the new sewer liner being installed on your street. If you smell this odor inside your home, it is perhaps the result of a dry or broken sewer trap. The purpose of the sewer trap is to maintain a water barrier in the pipe to prevent all sewer odor and sewer gases from entering your home (see figures below).

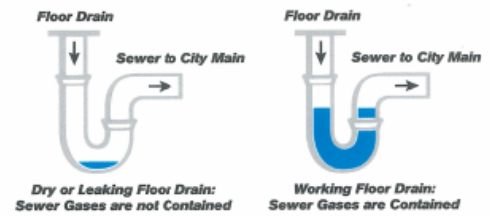

Dry or Leaking Floor Drain: Sewer Gases are not Contained — **Figure 1**

Working Floor Drain: Sewer Gases are Contained — **Figure 2**

Pour 1 gallon of water down all floor drains or any rarely used sinks/tubs/toilets to ensure that a water barrier is maintained in the traps. If this does not prevent odors from entering your home, then your trap may require repair and you may need to temporarily place plastic bags filled with water over the drain to prevent the backflow of odors. Opening windows to allow ventilation can also be effective. If you continue to smell odors, please call the Insituform representative so they may assist you with this problem.

Insituform has been chosen by your local government or sewer agency to rehabilitate your sewers. Used worldwide for 40 years, our product is proven and reliable. We typically complete installations in a single day, using robotic methods to restore active house connections from within the pipe.

Typical Cross Section - Sanitary Sewer at Service

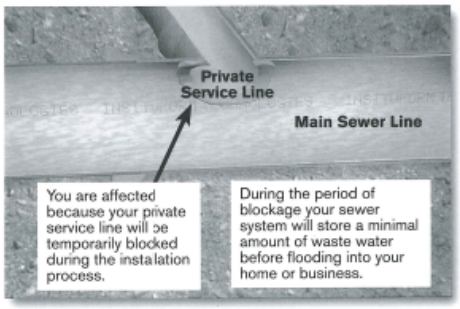

Figure 3 (After Rehabilitation)

Insituform
an AEGION company
www.insituform.com

ATTACHMENT S

CMOM SELF ASSESSMENT CHECKLIST

March 2019; Revised June 2019; Revised March 2020; Revised February 2021

About the CMOM Program Self Assessment Checklist

Introduction

A sanitary sewer collection system is a vital element of any community's infrastructure and a critical component of the wastewater treatment process. The nation's sanitary sewer infrastructure has been built over the last 100 years or more using a variety of materials, design standards, installation techniques, and maintenance practices. As this valuable infrastructure ages, the importance of preventive and predictive maintenance increases.

What is CMOM?

CMOM stands for "capacity, management, operations, and maintenance." It is a flexible, dynamic framework for municipalities to identify and incorporate widely-accepted wastewater industry practices to:

- Better manage, operate, and maintain collection systems
- Investigate capacity constrained areas of the collection system
- Respond to sanitary sewer overflow (SSO) events

The CMOM approach helps municipal wastewater utility operators provide a high level of service to customers and reduce regulatory noncompliance. CMOM can help utilities optimize use of human and material resources by shifting maintenance activities from "reactive" to "predictive"–often leading to cost savings through avoided overtime, emergency construction costs, increased insurance premiums, and the possibility of lawsuits. CMOM information and documentation can also help improve communications with the public, other municipal works and regional planning organizations, and regulators.

In CMOM planning, the utility selects performance goal targets, and designs CMOM activities to meet the goals. The CMOM planning framework covers operation and maintenance (O&M) planning, capacity assessment and assurance, capital improvement planning, and financial management planning. Information collection and management practices are used to track how well each CMOM activity is meeting the performance goals, and whether overall system efficiency is improving. On an ongoing basis, activities are reviewed and adjusted to better meet the performance goals. As the CMOM program progresses, performance goals can change. For instance, an initial goal may be to develop a geographic information system (GIS) of the system. Once the GIS is complete, a new goal might be to use the GIS to track emergency calls and use the information to improve maintenance planning.

An important component of a successful CMOM program is to periodically collect information on current systems and activities and develop a "snapshot-in-time" analysis. From this analysis, the utility establishes its performance goals and plans its CMOM program activities.

Additional information describing CMOM can be found at: www.epa.gov/npdes/sso or www.epa.gov/region4/water/wpeb/pdfs/self-audit_review2-3.pdf.

What is the purpose of the CMOM program checklist?

This document is a screening-level tool that can help utilities evaluate CMOM programs and identify general areas of strength and weakness. Completing this CMOM assessment will allow the utility to flag CMOM program areas that need improvement and establish priorities for additional, more detailed assessments. In addition, the checklist will allow the utility to compare annual performance (e.g., percent of employees meeting training standards).

This document is not intended to be all-inclusive. It addresses the types of practices EPA believes should be considered by most utilities when implementing a CMOM program. However, the ways in which utilities use the information gathered through the checklist will depend on the complexity and site-specific issues facing individual collection systems. When reviewing the questions, utilities should use their judgment to determine if the question is reasonable for their collection system size and design.

How do I use this checklist?

The questions on the checklist will request answers in three different formats:

- Check yes, no, or not applicable (NA),
- Fill in the blank, and
- Check all that apply.

At the end of each section, additional space is provided to allow for comments on or explanations of the answers recorded (information that will be useful to the utility in follow-on planning). Each utility should make an effort to answer all the questions that are applicable to its system. If a particular question takes a significant amount of time to answer, this could be an indication of an area of weakness. Utilities should plan to invest approximately one day to complete the checklist.

This document is designed to help utilities perform an initial evaluation of CMOM activities. **It is not intended to serve as an absolute indicator of a successful CMOM program, nor will all of the questions apply to every utility.** By working through these questions, utilities will be able to identify strengths and areas for improvements in their CMOM programs. If a utility has a significant number of “no” answers or very few items selected in the checklist, this could indicate an area of weakness. The utility manager then can make a more detailed evaluation, including identifying specific actions needed to address areas for improvement.

General Information

CHECKLIST COMPLETED BY:

Name _____ Date _____

Daytime Telephone Number _____

UTILITY CONTACT INFORMATION

Utility Name _____

LOCATION

Street Address _____

Street Address (continued) _____

City State Zip _____

STAFF

Name _____

Title _____

Email _____

Phone ( ) - Fax ( ) -

PERMITTED TREATMENT & COLLECTION FACILIITES

NPDES or STATE PERMIT #	PERMITTEE/CO-PERMITTEE/JURISDICTIONS	PERMIT COVERAGE: WWTP Effluent	Collection System	Wet-Weather Facility
		☐	☐	☐
		☐	☐	☐
		☐	☐	☐
		☐	☐	☐
		☐	☐	☐

Collection System Description

SYSTEM INVENTORY

Treatment Facilities

# of Treatment facilities	NUMBER
WWTP design capacity	MGD
Average daily flow	MGD
Average dry weather fow	MGD

Access & Maintenance

Manholes	NUMBER
Number of air vacuum relief valves	NUMBER

Conveyance & Pumping

	Gravity Sewers	Force Mains	Pump Stations
Pipes and pumps Length/quantity	MILES	MILES	NUMBER
Age of system 0 - 25 years old	% PERCENT	% PERCENT	% NUMBER
26 - 50 years old	% PERCENT	% PERCENT	% NUMBER
51 - 75 years old	% PERCENT	% PERCENT	% NUMBER
>76 years old	% PERCENT	% PERCENT	% NUMBER

Number of inverted siphons _____

SERVICE AREA CHARACTERISTICS

Service area	ACRES
Service population	PEOPLE
Annual precipitation	INCHES

Number of Service Connections

Residential		Commercial		Industrial		TOTAL
NUMBER	+	NUMBER	+	NUMBER	=	NUMBER

Collection system service lateral responsibility *(check one)*

- ☐ At main line connection only
- ☐ Beyond property line/clean out
- ☐ From main line to property line or easement/cleanout
- ☐ Other: _____

Combined Sewer Systems

What percent of sewer system is served by combined sewers (i.e., sanitary sewage and storm water in the same pipe)? % PERCENT

Collection System Description

	Gravity Sewers	Force Mains
PIPE DIAMETER		
8 inches or less	% PERCENT	% PERCENT
9 - 18 inches	% PERCENT	% PERCENT
19 - 36 inches	% PERCENT	% PERCENT
>36 inches	% PERCENT	% PERCENT
PIPE MATERIALS		
Prestressed concrete cylinder pipe (PCCP)	% PERCENT	% PERCENT
High density polyethylene (HDPE)	% PERCENT	% PERCENT
Reinforced concrete pipe (RCP)	% PERCENT	% PERCENT
Polyvinyl chloride (PVC)	% PERCENT	N/A PERCENT
Vitrified clay pipe (VCP)	% PERCENT	N/A PERCENT
Ductile iron	% PERCENT	% PERCENT
Non-reinforced concrete pipe	% PERCENT	% PERCENT
Asbestos cement pipe	% PERCENT	% PERCENT
Cast iron	% PERCENT	% PERCENT
Brick	% PERCENT	% PERCENT
Fiberglass	% PERCENT	% PERCENT
Other (*Explain*)_____	% PERCENT	% PERCENT

Engineering Design (ED)

ED-01	Is there a document which includes design criteria and standard construction details?	YES	NO
ED-02	Is there a document that describes the procedures that the utility follows in construction design review?	YES	NO
ED-03	Are WWTP and O&M staff involved in the design review process?	YES	NO
ED-04	Is there a procedure for testing and inspecting new or rehabilitated system elements both during and after the construction is completed?	YES	NO
ED-05	Are construction sites supervised by qualified personnel (such as professional engineers or certified engineering technicians) to ascertain that the construction is taking place in accordance with the agreed upon plans and specifications?	YES	NO
ED-06	Are new manholes tested for inflow and infiltration?	YES	NO
ED-07	Are new gravity sewers checked using closed circuit TV inspection?	YES	NO
ED-08	Does the utility have documentation on private service lateral design and inspection standards?	YES	NO
ED-09	Does the utility attempt to standardize equipment and sewer system components?	YES	NO

Satellite Communities and Sewer Use Ordinance (SUO)

SUO-01	Does the utility receive flow from satellite communities? IF NO, GO TO PAGE 6	YES	NO
SUO-02	What is the total area from satellite communities that contribute flow to the collection system? *(Acres or square miles)*	_____	
SUO-03	Does the utility require satellite communities to enter into an agreement? IF NO, GO TO QUESTION SUO-06.	YES	NO
SUO-04	Does the agreement include the requirements listed in the sewer use ordinance (SUO)?	YES	NO
SUO-05	Do the agreements have a date of termination and allow for renewal under different terms?	YES	NO
SUO-06	Does the utility maintain the legal authority to control the maximum flow introduced into the collection system from satellite communities?	YES	NO
SUO-07	Are standards, inspections, and approval for new connections clearly documented in a SUO?	YES	NO
SUO-08	Does the SUO require satellite communities to adopt the same industrial and commercial regulator discharge limits as the utility?	YES	NO
SUO-09	Does the SUO require satellite communities to adopt the same inspection and sampling schedules as required by the pretreatment ordinance?	YES	NO
SUO-10	Does the SUO require that satellite communities or the utility to issue control permits for significant industrial users?	YES	NO
SUO-11	Does the SUO contain provisions for addressing overstrength wastewater from satellite communities?	YES	NO

SUO-12 Does the SUO contain procedures for the following? *(Check all that apply)*

- ☐ Inspection standards
- ☐ Pretreatment requirements
- ☐ Building/sewer permit issues

SUO-13 Does the SUO contain general prohibitions of the following materials? *(Check all that apply)*

- ☐ Fire and explosions hazards
- ☐ Corrosive materials
- ☐ Obstructive materials
- ☐ Oils or petroleum
- ☐ Material which may cause interference at the wastewater treatment plant

SUO-14 Does the SUO contain procedures and enforcement actions for the following? *(Check all that apply)*

- ☐ Fats, oils, and grease (FOG)
- ☐ Infiltration and inflow
- ☐ Building structures over the sewer lines
- ☐ Storm water connections to sanitary lines (downspouts)
- ☐ Defects in service laterals located on private property
- ☐ Sump pumps, air conditioner connections

Organizational Structure (OC)

OC-01 Is an organizational chart available that shows the overall personnel structure for the utility, including operation and maintenance staff? YES NO

OC- 02 Are up-to-date job descriptions available that delineate responsibilities and authority for each position? YES NO

OC-03 Are the following items discussed in the job descriptions? *(Check all that apply)*

- ☐ Nature of work to be performed
- ☐ Examples of the types of work
- ☐ Minimum requirements for the position
- ☐ List of licenses required for the position
- ☐ Necessary special qualifications or certifications
- ☐ Performance measures or promotion potential

OC-04 What percent of staff positions are currently vacant? _____ %

OC-05 On average how long do positions remain vacant? *(months)* _____

OC-06 What percent of utility work is contracted out? _____ %

Internal Communications (IC)

IC-01 Which of the following methods are used to communicate with utility staff? *(Check all that apply)*

☐ Regular meetings ☐ Bulletin boards ☐ E-mail ☐ Other (walkie talkie/pager)

IC-02 How often are staff meetings held? *(e.g., Daily, Weekly, Monthly, etc.)* _____

IC-03 Are incentives offered to employees for performance improvements? YES NO

IC-04 Does the utility have an "Employee of the Month/Quarter/Year" program? YES NO

IC-05 How often are performance reviews conducted? *(e.g. Semi-annually, Annually, etc.)* _____

IC-06 Does the utility regularly communicate/coordinate with other municipal departments? YES NO

Budgeting (BUD)

BUD-01	What is the average annual fee for residential users?	$ _____
BUD-02	How often are user charges evaluated and adjusted? *(e.g. annually, biannually, etc.)*	_____
BUD-03	Are utility-generated funds used for non-utility programs?	YES NO
BUD-04	Are costs for collection system operation and maintenance (O&M) separated from other utility services such as water, storm water, and treatment plants? IF NO, GO TO QUESTION BUD-07.	YES NO
BUD-05	What is your average annual (O&M) budget?	$ _____
BUD-06	What percentage of the utility's overall budget is allocated to maintenance of the collection system?	_____ %
BUD-07	Does the utility have a Capital Improvement Plan (CIP) that provides for system repairs/replacements on a prioritized basis?	YES NO
BUD-08	What is your average annual CIP budget?	$ _____
BUD-09	What percentage of the maintenance budget is allotted to the following maintenance?	
	Predictive maintenance (tracking design, life span, and scheduled parts replacements)	_____ %
	Preventive maintenance (identifying and fixing system weaknesses which, if left unaddressed, could lead to overflows)	_____ %
	Corrective maintenance (fixing system components that are functioning but not at 100% capacity/efficiency; for example partially blocked lines)	_____ %
	Emergency maintenance (reactive maintenance, overflows, equipment breakdowns)	_____ %
BUD-10	Does the utility have a budgeted program for the replacement of under-capacity pipes?	YES NO
BUD-11	Does the utility have a budgeted program for the replacement of over-capacity pipes?	YES NO

Training (TR)

TR-01 Does the utility have a formal job knowledge, skills, and abilities (KSA) training program? YES NO

TR-02 Does the training program address the fundamental mission, goals, and policies of the utility? YES NO

TR-03 Does the utility have mandatory training requirements identified for key employees? YES NO

TR-04 What percentage of employees met or exceeded their annual training goals during the past year? _____ %

TR-05 Does the utility provide training in the following areas? *(Check all that apply)*

- ☐ Safety
- ☐ Traffic control
- ☐ Public relations
- ☐ Routine line maintenance
- ☐ Record keeping
- ☐ SSO/Emergency response
- ☐ Confined space entry
- ☐ Electrical and instrumentation
- ☐ Pump station operations and maintenance
- ☐ Other
- ☐ Pipe repair
- ☐ CCTV and trench/shoring
- ☐ Bursting CIPP

TR-06 Are operator and maintenance certification programs used? IF NO, GO TO QUESTION TR-08 YES NO

TR-07 Are operator and maintenance certification programs required? YES NO

TR-08 Is on-the-job training progress and performance measured? YES NO

TR-09 Which of the following methods are used to assess the effectiveness of the training? *(Check all that apply)*

☐ None ☐ Periodic testing ☐ Drills ☐ Demonstrations

TR-10 What percentage of the training offered by the utility is in the form of the following?

Manufacturer training _____ %

In-house classroom training _____ %

On-the-job training _____ %

Industry-wide training _____ %

Safety (SAF)

SAF-01	Does the utility have a written safety policy?	YES	NO
SAF-02	How often are safety procedures reviewed and revised? *(e.g. Semiannually, Annually, etc.)*	YES	NO
SAF-03	Does the utility have a safety committee?	YES	NO
SAF-04	Are regular safety meetings held with the utility employees?	YES	NO
SAF-05	Does the utility have a safety training program?	YES	NO
SAF-06	Are records of employee safety training kept up to date?	YES	NO

SAF-07 Does the utility have written procedures for the following? *(Check all that apply)*

- ☐ Lockout/tagout
- ☐ Material safety date sheets (MSDS)
- ☐ Chemical handling
- ☐ Confined spaces permit program
- ☐ Trenching and excavations safety
- ☐ Biological hazards in wastewater
- ☐ Traffic control and work site safety
- ☐ Electrical and mechanical systems
- ☐ Pneumatic and hydraulic systems safety

SAF-08 What is your agency's lost-time injury rate? _____ % or _____ hours

SAF-09 Are the following equipment items available and in adequate supply? *(Check all that apply)*

- ☐ Rubber/disposable gloves
- ☐ Confined space ventilation equipment
- ☐ Hard hats, safety glasses, rubber boots
- ☐ Antibacterial soap and first aid kit
- ☐ Tripods or non-entry rescue equipment
- ☐ Fire extinguishers
- ☐ Equipment to enter manholes
- ☐ Portable crane/hoist
- ☐ Atmospheric testing equipment and gas detectors
- ☐ Oxygen sensors
- ☐ H_2S Monitors
- ☐ Full body harness
- ☐ Protective clothing
- ☐ Traffic/public access control equipment
- ☐ 5-minute escape breathing devices
- ☐ Life preservers for lagoons
- ☐ Safety buoy at activated sludge plants
- ☐ Fiberglass or wooden ladders for electrical work
- ☐ Respirators and/or self contained breathing apparatus
- ☐ Methane gas or optical vector (OVA) analyzer
- ☐ Lower explosion limit (LEL) metering

SAF-10	Are safety monitors clearly identified?	YES	NO

Customer Service (CS)

CS-01 Does the utility have a customer service and public relations program? IF NO GO TO QUESTION CS-03 YES NO

CS-02 Does the customer service program include giving formal presentations on the wastewater field to the following? *(Check all that apply)*

- ☐ Schools and universities
- ☐ Local officials
- ☐ Media
- ☐ Building Inspector(s)
- ☐ Community gatherings
- ☐ Businesses
- ☐ Citizens
- ☐ Public utility officials

CS-03 Are employees of the utility specifically trained in customer service? YES NO

CS-04 Are there sample correspondence, Q/A's, or "scripts" to help guide staff through written or oral responses to customers? YES NO

CS-05 What methods are used to notify the public of major construction or maintenance work? *(Check all that apply)*

- ☐ Door hangers
- ☐ Newspaper
- ☐ Fliers
- ☐ Signs
- ☐ Other
- ☐ None
- ☐ Public radio or T.V. announcements

CS-06 Is a homeowner notified prior to construction that his/her property may be affected? YES NO

CS-07 Do you provide information to residents on cleanup and safety procedures following basement backups and overflows from manholes when they occur? YES NO

CS-08 Does the utility have a customer service evaluation program to obtain feedback from the community? YES NO

CS-09 Do customer service records include the following information? *(Check all that apply)*

- ☐ Personnel who received the complaint or request
- ☐ Name, address, and telephone number of customer
- ☐ Nature of the complaint or request
- ☐ Location of the problem
- ☐ To whom the follow-up action was assigned
- ☐ Date the follow up action was assigned
- ☐ Date of the complaint or request
- ☐ Cause of the problem
- ☐ Date the complaint or request was resolved
- ☐ Feedback to customer
- ☐ Total days to end the problem

CS-10 Does the utility have a goal for how quickly customer complaints (or ermergency calls) are resolved? IF NO, GO TO THE NEXT PAGE. YES NO

CS-11 What percentage of customer complaints (or emergency calls) are resolved within the timeline goals? _____ %

Equipment and Collection System Maintenance (ESM)

ESM-01 Is a maintenance card or record kept for each piece of mechanical equipment within the collection system? IF NO, GO TO QUESTION ESM-03. YES NO

ESM-02 Do equipment maintenance records include the following information? *(Check all that apply)*

- ☐ Maintenance recommendations
- ☐ Maintenance schedule
- ☐ Instructions on conducting the specific maintenance activity
- ☐ A record of maintenance on the equipment to date
- ☐ Other observations on the equipment

ESM-03 Are dated tags used to show out-of-service equipment? YES NO

ESM-04 Is there an established system for prioritizing equipment maintenance needs? YES NO

ESM-05 What percent of repair funds are spent on emergency repairs? _____%

ESM-06 Are corrective repair work orders backlogged more than six months? YES NO

ESM-07 Do collection system personnel coordinate with state, county, and local personnel on repairs, before the street is paved? YES NO

Equipment Parts Inventory (EPI)

EPI-01	Have critical spare parts been identified?	YES	NO
EPI-02	Are adequate supplies on hand to allow for two point repairs in any part of the system?	YES	NO
EPI-03	Is there a parts standardization policy in place?	YES	NO
EPI-04	Does the utility have a central location for storing spare parts?	YES	NO
EPI-05	Does the utility maintain a stock of spare parts on its maintenance vehicles?	YES	NO
EPI-06	Does the utility have a system in place to track and maintain an accurate inventory of spare parts?	YES	NO
EPI-07	For those parts which are not kept in inventory, does the utility have a readily available source or supplier?	YES	NO

Management Information System (MIS)

MIS-01 Does the utility have a management information system (MIS) in place for tracking maintenance activities? *(Either electronic or good paper files)* IF NO, GO TO PAGE 15. YES NO

MIS-02 Are the MIS records maintained for a period of at least three years? YES NO

MIS-03 Is the MIS able to distinguish activities taken in response to an overflow event? YES NO

MIS-04 Are there written instructions for managing and tracking the following information? *(Check all that apply)*

- ☐ Complaint work orders
- ☐ Scheduled inspections
- ☐ Compliance/overflow tracking
- ☐ Scheduled work orders
- ☐ Sewer system inventory
- ☐ Equipment/tools tracking
- ☐ Customer service
- ☐ Safety incidents
- ☐ Parts inventory
- ☐ Scheduled preventive maintenance
- ☐ Scheduled monitoring/ sampling

MIS-05 Do the written instructions for tracking procedures include the following information? *(Check all that apply)*

- ☐ Accessing data and information
- ☐ Updating the MIS
- ☐ Instructions for using the tracking system
- ☐ Developing and printing reports

MIS-06 How often is the management information system updated? *(Check one)*

- ☐ Immediately
- ☐ Within one week of the "incident"
- ☐ Monthly
- ☐ As time permits

System Mapping (MAP)

MAP-01 Are "as built" plans (record drawings) or maps available for use by field crews in the office and in the field? YES NO

MAP-02 Is there a procedure for field crews to record changes or inaccuracies in the maps and update the mapping system? YES NO

MAP-03 Do the maps show the date the map was drafted and the date of the last revision? YES NO

MAP-04 Do the sewer line maps include the following? *(Check all that apply)*

- ☐ Scale
- ☐ North arrow
- ☐ Date the map was drafted
- ☐ Date of last revision
- ☐ Service area boundaries
- ☐ Property lines
- ☐ Other landmarks (Roads, water bodies, etc.)
- ☐ Manhole and other access points
- ☐ Location of building laterals
- ☐ Street names
- ☐ SSOs occurrences/CSOs outfalls
- ☐ Flow monitors
- ☐ Force mains
- ☐ Pump stations
- ☐ Lined sewers
- ☐ Main, trunk, and interceptor sewers
- ☐ Easement lines and dimensions
- ☐ Pipe material
- ☐ Pipe diameter
- ☐ Installation date
- ☐ Slope
- ☐ Manhole rim elevation
- ☐ Manhole coordinates
- ☐ Manhole invert elevation
- ☐ Distance between manholes

MAP-05 Are the following sewer attributes recorded? *(Check all that apply)*

- ☐ Size
- ☐ Shape
- ☐ Invert elevation
- ☐ Material
- ☐ Separate/combined sewer
- ☐ Installation Date

MAP-06 Are the following manhole attributes recorded? *(Check all that apply)*

- ☐ Shape
- ☐ Type (e.g., precast, cast in place, etc.)
- ☐ Depth
- ☐ Age
- ☐ Material

MAP-07 Is there a systematic numbering and identification method/system established to identify sewer system manhole, sewer lines, and other items (pump stations, etc.)? YES NO

Internal TV Inspection (TVI)

TVI-01 Does the utility have a standardized pipeline condition assessment program? YES NO

TVI-02 Is internal TV inspection used to perform condition assessment? IF NO, GO TO PAGE 17. YES NO

TVI-03 Are there written operation procedures and guidelines for the internal TV inspection program? YES NO

TVI-04 Do the internal TV record logs include the following? *(Check all that apply)*

- ☐ Pipe size, type, length, and joint spacing
- ☐ Distance recorded by internal TV
- ☐ Results of the internal TV inspection (including a structural rating)
- ☐ Internal TV operator name
- ☐ Cleanliness of the line
- ☐ Location and identification of line being televised by manholes

TVI-05 Is a rating system used to determine the severity of the defects found during the inspection process? YES NO

TVI-06 Is there documentation explaining the codes used for internal TV results reporting? YES NO

TVI-07 Approximately what percent of the total defects determined by TV inspection during the past 5 years were the following?

Failed coatings or linings	%	Line deflection	%
House connection leaks	%	Joint separation	%
Illegal connections	%	Crushed pipes	%
Pipe corrosion (H_2S)	%	Collapsed pipes	%
Fats, oil, and grease	%	Offset joints	%
Broken pipes	%	Root intrusions	%
Debris	%	Minor cracks	%
Other	%		

TVI-08 Are main line and lateral repairs checked by internal TV inspection after the repair(s) have been made? YES NO

Sewer Cleaning (CLN)

CLN-01	What is the system cleaning frequency? (the entire system is cleaned every "X" years)	_____
CLN-02	What is the utility's plan for system cleaning (% or frequency in years)?	_____
CLN-03	What percent of the sewer lines are cleaned, even high/repeat cleaning trouble spots, during the past year?	_____ %
CLN-04	Is there a program to identify sewer line segments, with chronic problems, that should be cleaned on a more frequent schedule?	YES NO
CLN-05	Does the utility have a root control program?	YES NO
CLN-06	Does the utility have a fats, oils, and grease (FOG) program?	YES NO
CLN-07	What is the average number of stoppages experienced per mile of sewer pipe per year?	_____ %
CLN-08	Has the number of stoppages increased, decreased, or stayed the same over the past 5 years? ☐ Increased ☐ Decreased ☐ Stayed the same	
CLN-09	Are stoppages plotted on maps and correlated with other data such as pipe size and material or location?	YES NO
CLN-10	Do the sewer cleaning records include the following information? *(Check all that apply)* ☐ Date and time ☐ Method of cleaning ☐ Identity of cleaning crew ☐ Cause of stoppage ☐ Location of stoppage or routine cleaning activity ☐ Further actions necessary/initiated	
CLN-11	If sewer cleaning is done by a contractor are videos taken of before and after cleaning?	YES NO
CLN-12	Were there any SSOs near the cleaning "hotspots?" Providing a map w/ both hotspots and SSOs is a good way to present and track this info.	YES NO
CLN-13	How will future hotpots be added?	
CLN-14	Is there capacity in the sewer budget to add a FOG inspection program?	YES NO
CLN-15	How many total miles of sewerage was cleaned and televised in the last year? How many miles were cleaned/televised when the cleaning associated with the "hotspots" are not included?	YES NO
CLN-16	How many projects were completed from the priority list of sewer replacement/repair/rehab?	YES NO

Manhole Inspection and Assessment (MAN)

MAN-01 Does the utility have a routine manhole inspection and assessment program? IF NO, GO TO QUESTION MAN-06. YES NO

MAN-02 Are the results and observations from the routine manhole inspections recorded? YES NO

MAN-03 Does the utility have a goal for the number of manholes inspected annually? YES NO

MAN-04 How many manholes were inspected during the past year? _____

MAN-05 Do the records for manhole/pipe inspection include the following? *(Check all that apply)*

- ☐ Conditions of the frame and cover
- ☐ Evidence of surcharge
- ☐ Offsets or misalignments
- ☐ Atmospheric hazards measurements (especially hydrogen sulfide)
- ☐ Details on the root cause of cracks or breaks in the manhole or pipe including blockages
- ☐ Recording conditions of (corbel, walls, bench, trough, and pipe seals)
- ☐ Presence of corrosion
- ☐ If repair is necessary
- ☐ Manhole identifying number/location
- ☐ Wastewater flow characteristics (flowing freely or backed up)
- ☐ Accumulations of grease, debris, or grit
- ☐ Presence of infiltration, location, and estimated quantity
- ☐ Inflow from manhole covers

MAN-06 Does the utility have a grouting program? YES NO

Pump Stations (PS)

PS-01	Are Standard Operation Procedures (SOPs) and Standard Maintenance Procedures (SMPs) used for each pump station?	YES	NO
PS-02	Are there enough trained personnel to properly maintain all pump stations?	YES	NO
PS-03	Is there an emergency operating procedure for each pump station?	YES	NO
PS-04	Is there an alarm system to notify personnel of pump station failures and overflow?	YES	NO
PS-05	Percent of pump stations with back up power sources	_____ %	
PS-06	Does the utility use the following methods when loss of power ocurs? *(Check all that apply)* ☐ On-site electrical generators ☐ Portable electric generators ☐ Alternate power source ☐ Other ☐ Vacuum trucks to bypass pump station		
PS-07	Is there a procedure for manipulating pump operations (manually or automatically) during wet weather to increase in-line storage of wet weather flows?	YES	NO
PS-08	Are wet well operating levels set to limit pump start/stops?	YES	NO
PS-09	Are the lead, lag, and backup pumps rotated regularly?	YES	NO
PS-10	Are operation logs maintained for all pump stations?	YES	NO
PS-11	Are the original manuals that contain the manufacturers recommended maintenance schedules for all pump station equipment easily available?	YES	NO
PS-12	On average, how often were pump stations inspected during the past year?	YES	NO
PS-13	Are records maintained for each inspection?	YES	NO
PS-14	Average annual labor hours spent on pump station inspection	_____	
PS-15	Percent of pump stations with pump capacity redundancy	_____ %	
PS-16	Percent of pump stations with dry weather capacity limitations	_____ %	
PS-17	Percent of pump stations with wet weather capacity limitations	_____ %	
PS-18	Percent of pump stations calibrated annually	_____ %	
PS-19	Percent of pump stations with permanent flow meters	_____ %	

Capacity Assessment (CA)

CA-01	Does the utility have a flow monitoring program?	YES	NO
CA-02	Does the utility have a comprenhensive capacity assessment and planning program?	YES	NO
CA-03	Are flows measured prior to allowing new connections?	YES	NO
CA-04	Do you have a tool (hydraulic model, spreadsheet, etc.) for assessing whether adequate capacity exists in the sewer system? IF NO, GO TO QUESTION CA-06.	YES	NO
CA-05	Does your capacity assessment tool produce results consistent with conditions observed in the system?	YES	NO

CA-06 What is the ratio of peak wet weather flow to average dry weather flow at the wastewater treatment plant? _____

CA-07 How many permanent flow meters are currently in the system? *(Include meters at pump stations and wastewater treatment plants)* _____

CA-08 How frequently are the flow meters checked? *(e.g. Daily, Weekly, Monthly, etc.)* _____

CA-09 Do the flow meter checks include the following? *(Check all that apply)*

- ☐ Independent water level
- ☐ Velocity reading
- ☐ Downloading data
- ☐ Checking the desiccant
- ☐ Cleaning away debris
- ☐ Battery condition

CA-10	Are records maintained for each inspection? IF NO, GO TO QUESTION CA-12.	YES	NO

CA-11 Do the flow monitoring records include the following? *(Check all that apply)*

- ☐ Descriptive location of flow meter
- ☐ Frequency of flow meter inspection
- ☐ Type of flow meter
- ☐ Frequency of flow meter calibration

CA-12	Does the utility maintain any rain gauges or have access to local rainfall data?	YES	NO
CA-13	Does the utility have any wet weather capacity problems?	YES	NO
CA-14	Are low points or flood-plain areas monitored during rain events?	YES	NO
CA-15	Does the utility have any dry weather capacity problems?	YES	NO
CA-16	Is flow monitoring used for billing purposes, capacity analysis, and/or inflow and infiltration investigations?	YES	NO

Tracking SSOs (TRK)

TRK-01 How many SSO events have been reported in the past 5 years? _____

TRK-02 What percent of the SSOs were less than 1,000 gallons in the past 5 years ? _____ %

TRK-03 Does the utility document and report all SSOs regardless of size? YES NO

TRK-04 Does the utility document basement backups? YES NO

TRK-05 Are there areas that experience frequent basement or street flooding? YES NO

TRK-06 Approximately what percent of SSOs discharges were from each of the following in the last 5 years?

Manholes _____ %
Main and trunk sewers _____ %
Structural bypasses _____ %
Pump stations _____ %
Lateral and branch sewers _____ %

TRK-07 Approximately what percent of SSOs discharges were caused by the following in the last 5 years?

Debris buildup _____ %
Root intrusion _____ %
Excessive infiltration and inflow _____ %
Collapsed pipe _____ %
Capacity limitations _____ %
Fats, oil, and grease _____ %
Vandalism _____ %

TRK-07A What percentage of SSOs were released to:

Soil _____ %
Basements _____ %
Paved area _____ %
Surface water (rivers/lakes/streams) _____ %
Coastal, ocean, beaches _____ %

TRK-07B For surface water releases, what percent are to areas that could affect:

Contact recreation (beaches, swimming, areas) _____ %
Drinking water sources _____ %
Shellfish growing areas _____ %

TRK-08 How many chronic SSO locations are in the collection system? _____

TRK-09 Are pipes with chronic SSOs being monitored for sufficient capacity and/or structural condition? YES NO

TRK-10 Prior to collapse, are structurally deteriorating pipelines being monitored for renewal or replacement? YES NO

Overflow Emergency Response Plan (OERP)

OERP-01	Does the utility have a documented OERP available for utility staff to use? IF NO, GO TO QUESTION OERP-04.	YES	NO
OERP-02	How often is the OERP reviewed and updated? *(Annually, Biannually, etc.)*	_____	
OERP-03	Are specific responsibilities detailed in the OERP for personnel who respond to emergencies?	YES	NO
OERP-04	Are staff continuously trained and drilled to respond to emergency situations?	YES	NO
OERP-05	Do work crews have immediate access to tools and equipment during emergencies?	YES	NO
OERP-06	Does the utility have standard procedures for notifying state agencies, local health departments, the NPDES authority, the public, and drinking water authorities of significant overflow events?	YES	NO
OERP-07	Does the procedure include a current list of the names, titles, phone numbers, and responsibilities of all personnel involved?	YES	NO
OERP-08	Does the utility have a public notification plan?	YES	NO
OERP-09	Does the utility have procedures to limit public access to and contact with areas affected with SSOs? *(Procedure can be delegated to another authority)*	YES	NO
OERP-10	Does the utility use containment techniques to protect the storm drainage systems?	YES	NO

OERP-11 Do the overflow records include the following information? *(Check all that apply)*

- ☐ Date and time
- ☐ Location
- ☐ Any remediation efforts
- ☐ Cause s)
- ☐ How it was stopped
- ☐ Estimated flow/volume discharged
- ☐ Names of affected receiving water(s)
- ☐ Duration of overflow

OERP-12	Does the utility have signage to keep public from effected area?	YES	NO

Smoke and Dye Testing (SDT)

SDT-01	Does the utility have a smoke testing program to identify sources of inflow and infiltration?	YES	NO
SDT-01A	Does the utility have a smoke testing program to identify sources of inflow and infiltration in illegal connectors?	YES	NO
SDT-01B	Does the utility have a smoke testing program to identify sources of inflow and infiltration in house laterals (private service laterals)?	YES	NO
SDT-02	Are there written procedures for the frequency and schedule of smoke testing?	YES	NO
SDT-03	Is there a documented procedure for isolating line segments?	YES	NO
SDT-04	Is there a documented procedure for notifying local residents that smoke testing will be conducted in their area?	YES	NO
SDT-05	What is the guideline for the maximum amount of the line to be tested at one time? *(Feet or Miles)*	_____	
SDT-06	Are there guidelines for the weather conditions under which smoke testing should be conducted?	YES	NO
SDT-07	Does the utility have a goal for the percent of the system smoke tested each year?	YES	NO
SDT-08	What percent of the system has been smoke tested over the past year?	_____ %	
SDT-09	Do the written records contain location, address, and description of the smoking element that produced a positive result?	YES	NO
SDT-10	Does the utility have a dye testing program?	YES	NO
SDT-11	Are there written procedures for dye testing?	YES	NO
SDT-12	Does the utility have a goal for the percent of the system dye tested each year?	YES	NO
SDT-13	What percent of the main collection system has been dye tested over the past year?	_____ %	
SDT-14	Does the utility share smoke and dye testing equipment with another utility?	YES	NO

Hydrogen Sulfide Monitoring and Control (HSMC)

HSMC-01 How would you rate the systems vulnerability for hydrogen sulfide corrosion? *(Check only one)*

☐ Not a problem ☐ Only in a few isolated areas ☐ A major problem

HSCM-02 Does the utility have a corrosion control program? YES NO

HSCM-03 Does the utility take hydrogen sulfide corrosion into consideration when designing new or replacement sewers? YES NO

HSCM-04 Does the utility have written procedures for the application of chemical dosages? YES NO

HSCM-05 Are the chemical dosages, dates, and locations documented? YES NO

HSCM-06 Does the utility document where odor is a continual problem in the system? YES NO

HSCM-07 Does the utility have a program in place for renewing or replacing severely corroded sewer lines to prevent collapse? YES NO

HSCM-08 Are the following methods used for hydrogen sulfide control? *(Check all that apply)*

☐ Aeration ☐ Chlorine ☐ Potassium permanganate
☐ Iron salts ☐ Sodium hydroxide ☐ Biofiltration
☐ Enzymes ☐ Hydrogen peroxide ☐ Other
☐ Activated charcoal canisters

HSCM-09 Does the system contain air relief valves at the high points of the force main system? YES NO

HSCM-10 How often are the valves maintained and inspected? *(Weekly, Monthly, etc.)* _____

HSMC-11 Does the utility enforce pretreatment requirements? YES NO

Infrastructure Security

Although outside the scope of a CMOM program, municipal wastewater utilities should also consider security vulnerabilities. To reduce the threat of both intentional and natural disasters, the utility should take steps to implement appropriate countermeasures and develop or update emergency response plans.

ATTACHMENT T

PURE AIR FILTRATION ODOR CONTROL MANUAL

March 2019; Revised June 2019; Revised March 2020; Revised February 2021

OPERATION & MAINTENANCE MANUAL INFORMATION

PROJECT:

Highland IN – 37th Place Sanitary Lift Station

GENERAL CONTRACTOR:

Sweney Electric Company Inc

Description:

Pure Air Filtration is providing one DS-100 system per customer requirements.

PureAir Representative:
Peterson & Matz

July 13, 2012

6050 PEACHTREE PKWY, SUITE 240-187 ATLANTA, GA 30092
Ph: 678-935-1431, Fax: 678-935-0648

Operation and Maintenance Manual: DS100 Odor Drum Scrubber

6050 PEACHTREE PKWY, SUITE 240-187 ATLANTA, GA 30092
Ph: 678-935-1431, Fax: 678-935-0648

TABLE OF CONTENTS

Section A	General Description
Section B	Unit Drawing
Section C	Fan / Blower Information
Section D	Assembly steps
Section E	Chemical Media Information
Section F	Preventative Maintenance
Section G	Warranty Information

6050 PEACHTREE PKWY, SUITE 240-187 ATLANTA, GA 30092
Ph: 678-935-1431, Fax: 678-935-0648

A. General Description

6050 PEACHTREE PKWY, SUITE 240-187 ATLANTA, GA 30092
Ph: 678-935-1431, Fax: 678-935-0648

The DS100 Odor Drum Scrubber consists of a 55 gallon polyethylene drum containing dry media, with a blower mounted on grade with a sound enclosure. The intent of the Odor Drum Scrubber is to contain and neutralize sewage odors. The direct drive blower will draw a slight vacuum on the enclosed space through the 4" inlet opening. A FERNCO fitting is provided for easy connection to the pipe work. Upon contact with the dry chemical media, the sewage odor (typically hydrogen sulfide) will be removed from the air stream through adsorption on to the dry media.

The blower is sized to draw a maximum of 130 cfm initial airflow through the scrubber system, under ambient air conditions. The ODS system is arranged for vertical airflow through the single media bed, which contains up to 5 cubic feet of media (multiple types of media may be layered within the single bed). The media bed is configured and arranged to affect maximum contaminant removal efficiency.

Major components of the scrubber system, starting at the air inlet end, include:

- A “Mist and Grease Eliminator” assembly
- A 4" inlet with FERNCO flexible coupling
- 55 gallon polyethylene drum
- Media support grids and screen
- A Real-Time Media Life Rod
- Up to 5 cubic feet of dry adsorbant Pure Air Filtration media
- A 1/2 horsepower direct drive Blower-Motor Assembly
- Fan sound enclosure

6050 PEACHTREE PKWY, SUITE 240-187 ATLANTA, GA 30092
Ph: 678-935-1431, Fax: 678-935-0648

B. Unit drawing

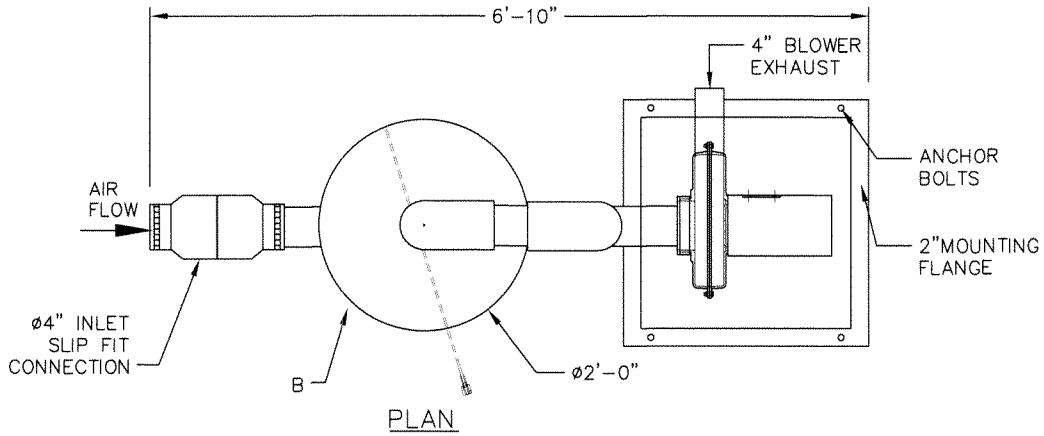

PLAN

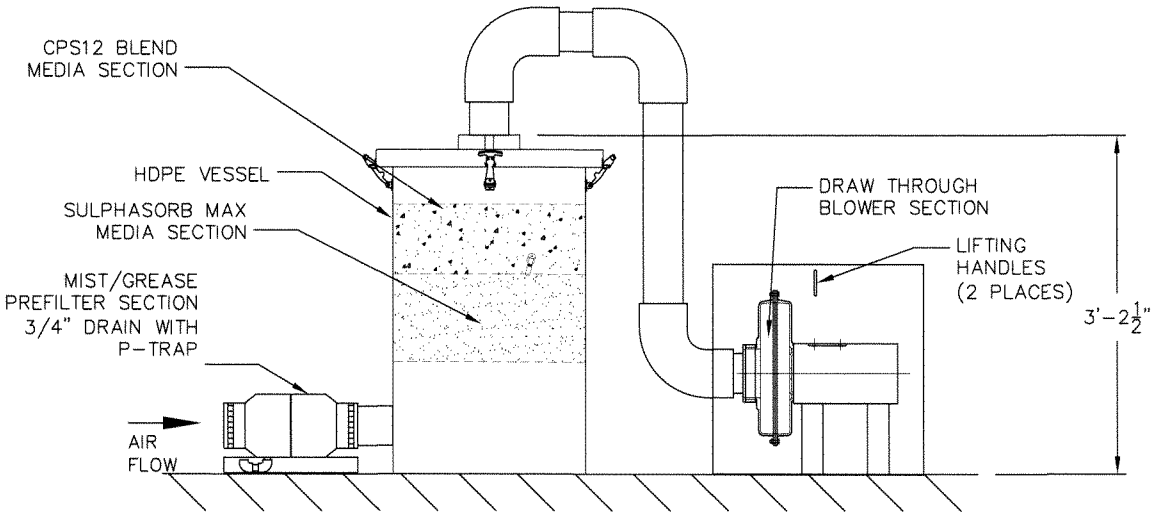

NOTES

DS MODEL	W	L	H
100	22"	82"	39"

1: HIGH EFFICIENCY MIST & GREASE SECTION
2: SCRUBBER HOUSING W/ PUREAIR MEDIA
3: 200 LBS OF PUREAIR SULPHASORB MAX MEDIA
4: ø2' HDPE TANK
5: FRP SOUND ENCLOSURE: 24"H x 24"W x 24"L
6: FRP SOUND ENCLOSURE WEIGHT: 25 LBS
5: APPROXIMATE UNIT WEIGHT: 600 LBS

NOTE: THE EQUIPMENT SUPPLIER WILL BE RESPONSIBLE TO PERFORM AN ONSITE TESTING OVER A (7) DAY PERIOD TO DETERMINE THE H2S PRESENT AND TO DEMONSTRATE THAT THE SYSTEM MEDIA WILL BE SUITABLE TO TREAT THE H2S LEVELS TO BE EXPERIENCED.

CONSTRUCTION

- DRAW THRU DESIGN
- MIST/GREASE ELIMINATOR CARTRIDGE
- HDPE VESSEL HOUSING
- REAL TIME MEDIA LIFE ROD
- SAMPLE PORTS

BLOWER CHARACTERISTICS

- AIRFLOW: 100 CFM
- PRESSURE DROP: 7.0 IWG
- ELECTRICAL: 120/1/60
- MOTOR: 1/2 HP, PREMIUM EFFICIENT
- BLOWER/MOTOR ASSEMBLY IS SUITABLE FOR OUTDOOR USE

MISCELLANEOUS

- ALTERNATE CONFIGURATIONS AND OPTIONS AVAILABLE
- DIMENSIONS ARE APPROXIMATE (INCHES)

PureAir Filtration
6050 Peachtree Pkwy
Suite 240-187
Atlanta, GA 30092
(678) 935-1431

CLIENT: NIES ENGINEERING INC

PROJECT: HIGHLAND LIFT STATION

MODEL: DS-100-BT-MG_1

DRAWING: M1

SCALE:	N.T.S.	DRAWN BY:	AAY	REVISION:	2	DATE:	NOV. 01 2011

PROPRIETARY INFORMATION
THIS DOCUMENT CONTAINS PUREAIR FILTRATION LLC. PROPRIETARY AND CONFIDENTIAL INFORMATION. IT IS LOANED FOR LIMITED PURPOSES ONLY AND REMAINS THE PROPERTY OF PUREAIR FILTRATION LLC. IT MAY NOT BE REPRODUCED IN WHOLE OR PART OR DISCLOSED TO THIRD PARTIES WITHOUT THE PRIOR WRITTEN CONSENT OF PUREAIR FILTRATION LLC. THE DOCUMENT IS TO BE RETURNED TO PUREAIR FILTRATION LLC. UPON REQUEST AND IN ALL EVENTS UPON COMPLETION OF THE USE FOR WHICH IT WAS LOANED.

Highland 37th Place Sanitary Lift Station O&M

07/13/2012

6050 PEACHTREE PKWY, SUITE 240-187 ATLANTA, GA 30092
Ph: 678-935-1431, Fax: 678-935-0648

C. Fan / Blower Information

Twin City Fan & Blower

INSTALLATION, OPERATION & MAINTENANCE MANUAL

Centrifugal Fans

ENGINEERING SUPPLEMENT
ES-52
Issue Date: 1-1-94
Rev. Date: 7-1-10

Contents

Introduction 1
Shipping and Receiving 1
Handling 1
Short Term Storage 2
Long Term Storage 2
Foundations and Supporting Structures 2
Fan Installation 2
  Factory Assembled Units 2
  Disassembled Units 2
Fan Operation – Safety 4
Operation Checklist 4
Maintenance of Fans 5
  General Motor Maintenance 5
  Drive Maintenance 5
  Bearing Maintenance 6
  Lubrication 6
  Wheel and Shaft Maintenance 6
  Structural Maintenance 6
Troubleshooting Guidelines 6
Troubleshooting Performance Problems
  Air Capacity Problems 7
  Noise Problems 7
  Vibration Problems 7
  Motor Problems 7
  Drive Problems 7
  Bearing Problems 7
Limitation of Warranties and Claims 8

Introduction

The purpose of this manual is to provide instructions that complement good general practices when installing or operating fans manufactured by Twin City Fan & Blower. It is the responsibility of the purchaser to provide qualified personnel experienced in the installation, operation, and maintenance of air moving equipment.

Instructions given in the body of this manual are general in nature and apply to a variety of models manufactured by Twin City Fan & Blower. Most units can be installed and maintained with the instructions given.

Special applications may require additional information. These instructions are supplied in the form of attached appendices. Use the instructions in the appendix if the directions in this manual differ from instructions in the appendix.

As always, follow good safety practices when installing, maintaining and operating your air moving equipment. A variety of safety devices are available. It is the user's responsibility to determine adequate safety measures and to obtain the required safety equipment.

Shipping and Receiving

All Twin City Fan & Blower products are carefully constructed and inspected before shipment to insure the highest standards of quality and performance.

Compare all components with the bill of lading or packing list to verify that the proper unit was received.

Check each unit for any damage that may have occurred in transit. Any damage should be reported immediately to the carrier and the necessary damage report filed.

Handling

Handling of all air moving equipment should be conducted by trained personnel and be consistent with safe handling practices. Verify the lift capacity and operating condition of handling equipment. Maintain handling equipment to avoid serious personal injury.

Units shipped completely assembled may be lifted with slings and spreader bars. Use well-padded chains, cables or nylon straps. On most units, lifting lugs are provided for attaching chains (see Figure 1). Lift the fan in a fashion that protects the fan and fan coating from damage. Never lift a fan by the inlet or discharge flange, shafting or drives, wheel or impeller, motor or motor base, or in any other manner that may bend or distort parts.

Partial or disassembled units require special handling. All parts should be handled in a fashion which protects the coatings and parts from damage. Components should be handled such that forces are not concentrated and bending or distortion cannot occur.

Figure 1. Lifting Lug Locations

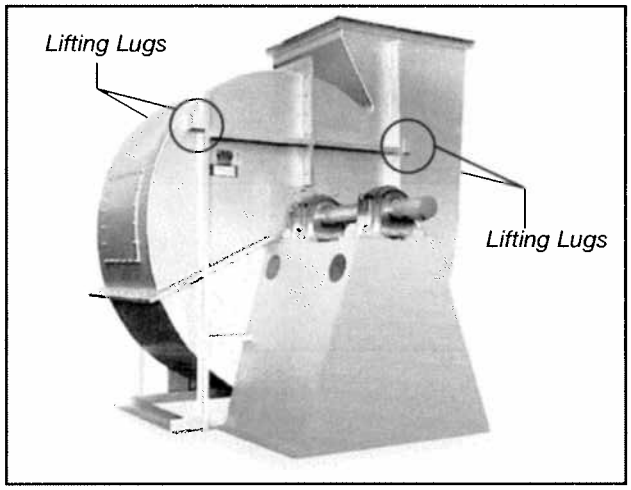

Housing should be lifted using straps and spreaders. Do not distort housing or side plates when lifting.

Bearing pedestals should be lifted using straps or padded chains. Under no circumstances should an attached or separated bearing pedestal be lifted by the shaft, bearings, drives, motor or wheel.

The shaft and wheel assembly may be lifted using a hoist and a spreader with a sling around the shaft at points nearest the wheel (see Figure 2). Take care not to scratch the shaft where the wheel or bearings will be mounted. Never lift or support the assembly by the wheel. Always support the assembly by the shaft when lifting or storing. Do not support the shaft or the wheel on housing

Figure 2. Moving Shaft and Wheel with Spreader Bar

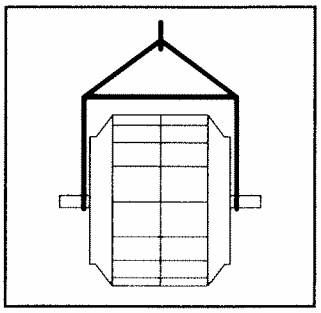

©2010 Twin City Fan Companies, Ltd.

sides. Use only the key provided with the shaft and wheel.

Wheels shipped separately can be lifted by slings running through the blades and around the hub. Never lift the wheel by blades or flanges. Always transport wheels by lifting. Do not roll the wheel as this can damage coatings and change the balance of the wheel.

Bent shafting is a source of vibration and bearing failure, so handle the shaft with care. Any scratches on the shaft may be removed with fine emery cloth or a stone.

Short Term Storage

If fan installation is to be delayed, store the unit in a protected area. Protect the fan and motor bearings from moisture and vibration (or shock loading).

Long Term Storage

Prior to Storage – Fan bearings (and motor bearings per the motor manufacturer's specifications) are to be greased at the time of going into extended storage. On belt drive units the belt tension should be reduced to less than half the specified value for the fan's design to prevent a sag/set from forming in the shafts and belts. If the unit was supplied with a motor, the motor windings should be measured at this time and recorded for comparison prior to placing in service. If the fan housing was supplied with a drain connection, this plug should be removed to prevent any moisture from accumulating in this portion of the unit during storage.

Storage Procedure – Fans should be stored indoors whenever possible where control over temperature, shock and dust is reasonably maintained. If units are to be stored outside in the elements, they should be covered with a water-resistant material. The bearings should be shielded individually from water and dirt; however, do not tightly seal to avoid trapping condensation. Stored equipment should be stored on a clean, dry floor or blocked up off the ground on blocks to prevent unit from setting in any water or directly on the ground. If shock or vibration will be present during storage, the unit may need to be placed on some type of vibration dampening material to aid in preventing brinelling of the bearing surfaces.

Periodic Check – On a monthly interval, the equipment should be checked to ensure that it has remained in an acceptable stored condition. The fan (and motor if supplied) should be rotated several times by hand while adding enough grease to replenish the bearing surfaces with fresh grease and to maintain a full bearing cavity. Grease used must be compatible with that already supplied in the motor and fan bearings. The fan impeller should be left at approximately 180 degrees from that of the previous month to prevent the shaft and impeller from taking a set in one position. Storage records should be maintained which indicate the above requirements have been followed. Consult the motor manufacturer for proper storage, space heater connection and lubrication if the unit was supplied with one.

Start-Up – When the unit is removed from storage, all bearing grease should be purged and replenished with fresh grease as per the lubrication decal. The motor should be measured to verify that the resistance is still at a satisfactory level compared to the value recorded prior to storage.

Foundations and Supporting Structures

Floor mounted fans should be installed on a flat, level, rigid concrete foundation with a mass at least three to five times that of the assembly supported as a guide, depending on the size and speed of the fan. Foundation shall be suitable for static and dynamic loads and foundation frequencies be separated at least 20% from the rotational speed/speed ranges. The plan area should be no more than twice that required by the equipment. Foundations with larger areas should have correspondingly larger mass. Anchor bolts should be "L" or "T" shaped with sufficient length for nuts, washers, shims, and threads for draw-down. Each bolt should be placed in a sleeve or pipe with a diameter larger than the bolt to allow for adjustment.

If the fans are mounted on a sub-structure, an inertia base with spring isolator system should be considered.

Fans mounted to or within a structure should be placed as close as possible to a rigid member such as a wall or column. The structure must be designed for rotating equipment; static design for strength is not sufficient to insure proper operation. Supports for suspended fans must be cross-braced to prevent side sway. Structural resonance should be at least 20% from fan operating speed. Vibration isolators should be used where applicable.

Any ducting should have independent support; do not use the fan to support ducting. Isolating the fan from ductwork with flex connections eliminates transmission of vibration. Fans handling hot gases require expansion joints at both the inlet and discharge to prevent excessive loads caused by thermal growth.

Fan Installation – Factory Assembled Units

Follow proper handling instructions given earlier.

1. Move the fan to the final mounting position.
2. Remove skid, crates, and packing materials carefully.
3. If supplied, place vibration pads or isolation base on mounting bolts. Line up holes in fan base with bolts.
4. Place fan on mounting structure. Carefully level unit using shims as required at all mounting hole locations. Bolt down the unit.
5. Any grout may now be used. Bolt the fan in position before applying grout. Do not depend upon grout to support rotating equipment.
6. Continue with Operations Checklist.

Additional instructions may be given for some fan models, components and accessories in the appendix.

Fan Installation – Disassembled Units

A unit is considered "disassembled" if any component required for proper operation is shipped or supplied separately or in pieces. Reference earlier instructions concerning proper handling of fan components.

Instructions for Mounting and Assembly of Unit:

1. Move lower housing/framework to mounting location.
2. If vibration pads or bases are used, place on bolts first. Place lower housing assembly onto bolts.
3. Level and shim if required. Bolt into place.
4. If separated pedestal or bearing pedestal:
   a. Bring bearing pedestal to desired location.
   b. Place any vibration base or pads into place. Set bearing pedestal on bolts.
   c. Never distort bearing pedestal by forcing it to align with a non-level surface. Shim beneath the pedestal as required.

d. Check bearing centerline height. Change centerline height to match centerline height of housing. High temperature units may require the housing centerline to be lower when cold so that it will be centered when hot.

e. Measure from housing to bearing pedestal to bring bearing pedestal into square with housing (a large square may also suffice).

f. Bolt into position.

5. Shaft and wheel assembly preparation:

a. Clean protective coating off shaft with solvent. Do not touch clean areas of shaft with hands. Perspiration can cause rust or pitting over time.

b. Remove keys from shaft.

c. Clean inside of wheel bore with solvent. Make sure setscrews will not interfere when inserting shaft into wheel bore.

6. Arrangement 1, 9 or 10: Drive Component Assembly (See Figure 3):

a. Insert shaft into wheel from back side of wheel.

b. When shaft is flush with wheel hub, put key into keyway and tighten wheel setscrews.

c. Insert shaft through opening in drive side. (If split housed unit, lower into position.)

d. Install bearings onto shaft. Do not tighten bearing setscrews at this time. The bearing housing should be perpendicular and the bearing base parallel to the axis of the shaft to prevent loads caused by misalignment.

e. Mount assembly, bolt bearings to drive stand. Shaft must be parallel with side of bearing pedestal. After aligning and bolting bearings to pedestal, tighten bearing setscrews. Continue with step 8.

Figure 3. Drive Component Assembly

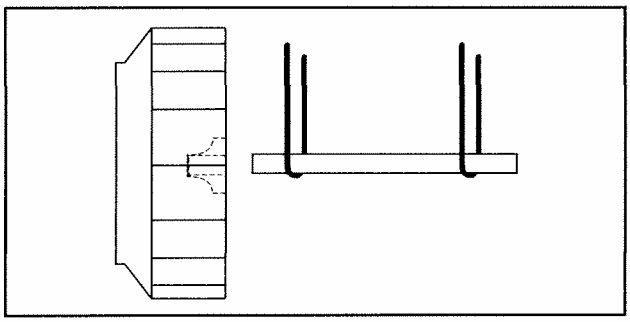

7. Arrangement 3 (Split-housed) units (See Figure 4):

a. Parts on DWDI units are assembled in the following order as viewed from opposite drive side: Bearing bar assembly and opposite bearing, funnel, (housing side), wheel, (housing side), funnel, drive side bearing bar assembly, drive bearing and sheaves. Mount bearing bar assembly to housing. Center wheel in funnels.

b. Parts on SWSI units are assembled in the following order as viewed from opposite drive side: Bearing bar assembly and opposite bearing, funnel, (housing side), wheel, (housing side), drive side bearing bar assembly, drive bearing and sheaves. Mount bearing bar assembly to housing. (See Figure 7 for wheel-funnel overlap.)

c. Assemble parts in above order on shaft.

d. Move assembly into position. Lightly bolt bearings into place.

Figure 4. Split-housed Drive Component Assembly

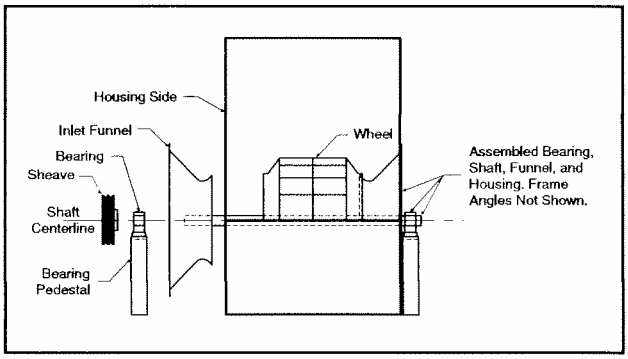

e. Shaft should be parallel with discharge of housing. Move bearings to accommodate.

f. Level shaft; shim bearings if required. Tighten bearing setscrews.

8. Install motor on base. Carefully align shafts for drive installation.

9. Mount drives as follows:

a. Slip (do not pound) proper sheave onto corresponding shaft. CAUTION: PLACING FAN SHEAVE ON MOTOR CAN OVERSPEED WHEEL AND CAUSE STRUCTURAL FAILURE.

b. Position sheaves so they are placed on motor shaft and fan shaft as close as possible to the motor and/or bearing. Sheave must be placed so that it does not rub on the bearing, motor guard or other structures. On keyed shafts, the key should be placed in the keyway pushed toward the bearing as far as the runout will allow without rubbing. The back of the sheave should be lined up with the end of the key (see Figure 5). For sheaves without a key, the sheave should be placed as close to motor and/or bearing as possible without rubbing. Typically the sheave should be at least ¼" away from the motor, bearing, guard, structures, etc.

Figure 5. Sheave Position

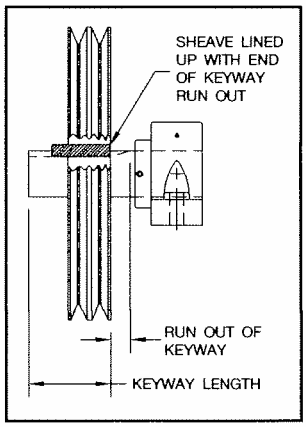

c. Align sheaves with a straightedge extended along the perimeters of both sheaves, just making contact in two places on outside perimeters of both sheaves (see Figure 6).

Figure 6. Sheave Alignment

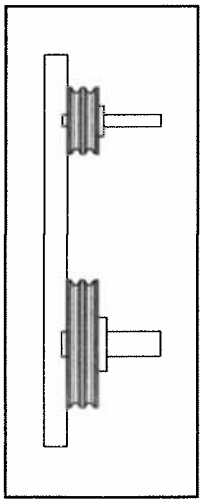

d. Tighten down sheave bolts.

e. Install a matched set of belts. Slide the motor to obtain slack and tighten belts. Using a pry will damage belts.

f. Tighten belts to proper belt tension. Ideal tension is just enough tension so that belts do not slip under peak load. Recheck sheave alignment.

Figure 7. Wheel-Funnel Overlap

HIB, RTF, HRT, BC, BCS, TSL, BAF, BAE, EPF & EPQ

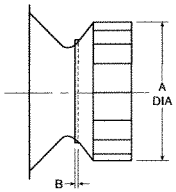

HIB, RTF, HRT* Wheel Placement									
Size	A	B	B*		Size	A	B	B*	
			19	23				19	23
180	20.50	0.31	—	—	400	45.25	0.69	1.03	0.97
200	22.50	0.34	—	—	450	50.00	0.75	1.13	1.06
220	25.00	0.38	—	—	490	55.13	0.81	1.25	1.13
240	27.50	0.44	—	—	540	61.00	0.91	1.38	1.25
270	30.38	0.47	0.50	0.50	600	67.50	1.00	1.31	1.31
300	33.50	0.50	0.69	0.69	660	74.25	1.13	1.56	1.44
330	37.00	0.56	0.69	0.69	730	82.00	1.22	1.75	1.63
360	41.00	0.63	0.81	0.81	800	90.75	1.34	1.06	1.31

*Use second 'B' columns for HRT-19 and HRT-23 dimensions

BC-SW, BC-DW, BCS, TSL, BAF SWSI & DWDI Wheel Placement											
Size	122	135	150	165	182	200	222	245	270	300	330
A	12.25	13.50	15.00	16.50	18.25	20.00	22.25	24.50	27.00	30.00	33.00
B	0.32	0.34	0.38	0.44	0.56	0.63	0.69	0.75	0.88	0.97	1.06

Size	365	402	445	490	542	600	660	730	807	890
A	36.50	40.25	44.50	49.00	54.25	60.00	66.00	73.00	80.75	89.00
B	0.94	1.03	1.13	1.25	1.38	1.56	1.69	1.88	2.09	2.28

EPF, EPQ Wheel Placement			
Size	122	150	165
A	13.00	14.13	16.16
B	0.25	0.25	0.25

BAE SWSI & DWDI Wheel Placement				
Size	122	135	150	165
A	12.25	13.50	15.00	16.50
B	0.31	0.34	0.38	0.44

EPF, EPQ, BAE SWSI & DWDI Wheel Placement											
Size	182	200	222	245	270	300	330	365	402	445	490
A	19.00	20.82	23.16	25.51	28.11	31.23	34.36	38.00	41.90	46.33	51.01
B	0.38	0.41	0.46	0.50	0.55	0.62	0.68	0.75	0.83	0.91	1.01

Size	542	600	660	730	807
A	56.48	62.47	68.71	76.00	84.07
B	1.11	1.23	1.36	1.50	1.66

APF & APQ Wheel Placement																		
Size	121	141	161	181	201	221	251	281	321	351	391	441	491	551	631	711	791
A	13.00	14.13	16.16	18.44	19.94	22.78	25.06	28.25	31.81	35.81	39.81	44.56	50.06	55.75	63.69	71.69	79.63
B	0.25	0.25	0.25	0.31	0.31	0.31	0.50	0.50	0.56	0.63	0.63	0.75	0.78	0.81	1.03	1.28	1.38

RBA, RBO & RBR

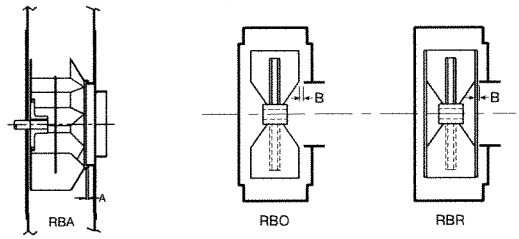

RBA Wheel Placement																		
Size	907	909	911	913	915	917	919	921	923	926	929	933	937	941	945	949	954	960
A	0.25	0.38	0.47	0.53	0.59	0.69	0.69	0.0	0.0	0.0	0.0	0.0	0.0	0.0	0.0	0.0	0.0	0.0

RBO, RBR Wheel Placement															
Size	913	915	917	919	921	923	926	929	933	937	941	945	949	954	960
B	0.53	0.53	0.59	0.69	0.78	0.88	0.97	1.03	1.22	1.38	1.56	1.69	1.81	1.88	2.16

Note: On sizes 905-911 wheel is to be centered in housing.

MBW, MBO & MBR

MBW, MBO, MBR Wheel Placement											
Size	196	224	252	280	308	336	365	421	477	533	589
MBW	0.50	0.44	0.38	0.25	0.38	0.44	0.56	0.63	0.75	0.75	0.88
MBO	0.50	0.44	0.38	0.25	0.38	0.44	0.56	0.63	0.75	0.75	0.88
MBR	0.25	0.25	0.25	0.25	0.25	0.38	0.50	0.69	0.81	0.94	1.00

Note: On sizes 421-589 wheel is to be centered in housing.

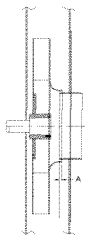

BCN

BCN Wheel Placement											
Size	270	300	330	365	402	445	490	542	600	660	730
A	0.09	0.09	0.13	0.13	0.13	0.16	0.16	0.19	0.22	0.22	0.25

FC

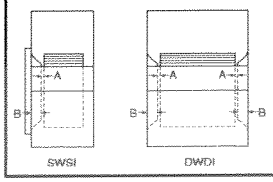

FC Wheel Placement					
Size	A	B	Size	A	B
10.5	0.47	0.69	30	0.75	4.38
12	0.25	1.88	33	0.81	5.00
15	0.44	2.19	36	0.75	5.00
18	0.50	2.25	39	1.06	6.38
21	0.69	2.88	42	1.69	7.50
24	0.81	3.00	48	1.50	7.13
27	0.69	3.13	54	1.00	10.50

g. After initial installation of belts, recheck belt tension again after a few days to adjust belt tension. (New belts require a break-in period of operation.)

10. Install any safety devices or accessories supplied. (Accessories commonly used are inlet vanes, shaft seals and shaft coolers, plugs, dampers, and inlet or discharge screens. Refer to appropriate documents in appendix.)
11. Grout may now be applied. Grout is used to distribute loads and should not be used as the sole support of any rotating equipment.
12. When connecting the fan to the system, it is recommended that the inlet and discharge be isolated from the system with flex connections (where practical) to block transmitted vibration. All duct connections to the fan should be independently supported. Do not use fan to support duct.

Fan Operation - Safety

For general safety practices for air moving equipment, see AMCA Bulletin 410.

Twin City Fan & Blower has many safety accessories available. These safety devices include (but are not limited to) belt guards, shaft guards, inlet and discharge screens. The use, abuse, or non-use of safety devices is the responsibility of the purchaser.

Facility-related safety conditions include fan accessibility and location. How easily can non-service personnel access the unit? Is the fan in a hazardous duty environment? Was the unit ordered for this duty? Other concerns must also be addressed. All fans should be powered through switches which are easily accessible to service personnel from the fan. Every switch should have the ability to be "locked-off" by the service person and the key to be retained by this person to prevent accidental power of the fan while service is in process.

Operation Check List

Verify that proper safety precautions have been followed:
- ☐ Electrical power must be locked off.

Check fan mechanism components:
- ☐ System connections are properly made and tightened.
- ☐ Bearings are properly lubricated.
- ☐ Wheel, drives and fan surfaces are clean and free of debris.
- ☐ Rotate the impeller by hand to verify it has not shifted in transit.
- ☐ Check fan/wheel overlap. (See Figure 7.)
- ☐ Drives on correct shafts (not reversed).
- ☐ Check position of guards to prevent rubbing.

Check fan electrical components:
- ☐ Motor is wired for proper supply voltage.
- ☐ Motor was properly sized for power and rotational inertia of rotating assembly.
- ☐ Motor is properly grounded.
- ☐ All leads are properly insulated.

Trial "bump":
- ☐ Turn on power just long enough to start assembly rotating.
- ☐ Check rotation for agreement with rotation arrow. Does the assembly make any unusual noise? (See Figure 8.)
- ☐ Check drive alignment and tension. Does this meet with drive manufacturer's recommendations?
- ☐ Correct any problems which may have been found. (Follow safety guidelines - shut power off.) Perform checklist again until unit is operating properly.
- ☐ Run unit up to speed.

Figure 8. Proper Wheel Rotation

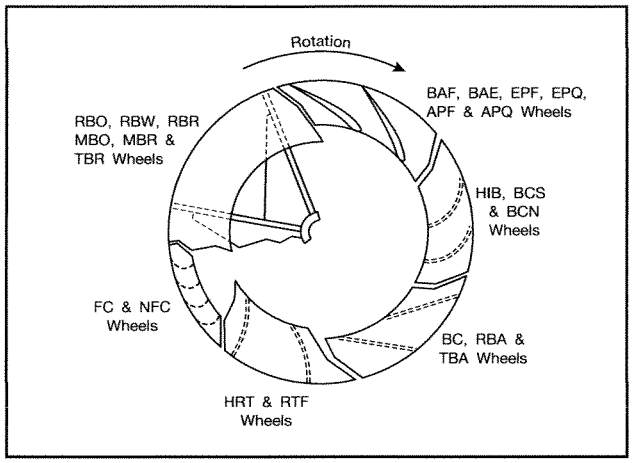

Verify fastener tightness. These may have loosened during shipment or installation.

- ☐ Setscrews attaching wheel hub to shaft.
- ☐ Setscrews in drive sheaves or coupling.
- ☐ Nuts on inlet funnel.
- ☐ Nuts and bolts holding motor.
- ☐ Nuts holding housing frame to base and base to ground.
- ☐ Nuts on accessories including shaft seal, access doors and pie-splits.
- ☐ Bolts in taper-lock bushings.
- ☐ Grease line connections.

After one week of operation, check all nuts, bolts and setscrews and tighten if necessary.

Maintenance of Fans

This section contains general maintenance instructions for your Twin City Fan & Blower unit. For specific information about maintenance of components, particularly for special application fans, see the attached documents.

General Motor Maintenance

The three basic rules of motor maintenance are keep the motor clean, dry and properly lubricated.

Keeping motors and windings clean is important because dirt and dust serve as thermal insulators. Heat normally dissipated by the motor is trapped causing overheating and/or premature failure. Blow dust and dirt out of windings and off the motor periodically. Use low pressure (50 psig) airstream so that winding damage does not occur. Keep the area surrounding the motor open so the air can circulate through the motor cooling fan. Follow normal maintenance schedule given to the right.

Motors should be kept dry to avoid electrical short circuits. Motors kept in storage for long periods of time can have moisture condense on the windings. Be certain the motor is dry before using.

Some smaller motors are lubricated for life. Motor bearing lubrication, if required, must follow a rigorous schedule. Motors less than 10 hp running about eight hours a day in a clean environment should be lubricated once every five years; motors 15 to 50 hp, every 3 years; and motors 50 to 150 hp, yearly. For motors in a dusty or dirty environment or running 24 hours a day, divide the service interval by 2. If the environment is very dirty or high temperatures exist, divide the service interval by 4. Lubrication requirements are normally attached to the motor. Do not overlubricate.

Figure 9. Safety & Lubrication Instructions for Fans with Ball Bearings

WARNING

1. This equipment must not be operated without proper guarding of all moving parts. While performing maintenance be sure remote power switches are locked off. See AMCA Publication 410 for recommended safety practices.
2. Before starting: Check all setscrews for tightness, and rotate wheel by hand to make sure it has not moved in transit.

Relubrication Schedule (Months)*
Ball Bearing Pillow Blocks

Speed (RPM)	500	1000	1500	2000	2500	3000	3500	4000	4500
Shaft DIA									
½" thru 1 11/16"	6	6	5	3	3	2	2	2	1
1 15/16" thru 2 7/16"	6	5	4	2	2	1	1	1	1
2 11/16" thru 2 15/16"	5	4	3	2	1	1	1		
3 7/16" thru 3 15/16"	4	3	2	1	1	1			

* Suggested initial greasing interval: Relubricate while running, if safety permits, until some purging occurs at seals. Adjust lubrication frequency depending on condition of purged grease. Hours of operation, temperature, and surrounding conditions will affect the relubrication frequency required.

1. Lubricate with a high quality NLGI No. 2 or No. 3 multipurpose ball bearing grease having rust inhibitors and antioxidant additives. Some greases having these properties are:

   Shell - Alvania No. 2 Mobil - Mobilith AW2/Mobilith SHC100
   Gulf - Gulfcrown No. 2 American - Rykon Premium 2

2. Lubricate bearings prior to extended shutdown or storage and rotate shaft monthly to aid corrosion protection.

Figure 10. Safety & Lubrication Instructions for Fans with Unit Roller Bearings

WARNING

1. This equipment must not be operated without proper guarding of all moving parts. While performing maintenance be sure remote power switches are locked off. See AMCA Publication 410 for recommended safety practices.
2. Before starting: Check all setscrews for tightness, and rotate wheel by hand to make sure it has not moved in transit.

Relubrication Schedule (Months)*
Spherical Roller Bearing - Solid Pillow Blocks

Speed (RPM)	500	1000	1500	2000	2500	3000	3500	4000	4500
Shaft DIA									
1 3/16" thru 1 7/16"	6	4	4	2	1	1	1	1	½
1 11/16" thru 2 3/16"	4	2	1½	1	½	½	½	½	½
2 7/16" thru 3 7/16"	3	1½	1	½	½	¼	¼		
3 15/16" thru 4 15/16"	2½	1	½	¼					

*Suggested initial greasing interval: Relubricate while running, if safety permits, until some purging occurs at seals. Adjust lubrication frequency depending on condition of purged grease. Hours of operation, temperature, and surrounding conditions will affect the relubrication frequency required.

1. Lubricate with a multipurpose roller bearing NLGI No. 2 having rust inhibitors and antioxidant additives, and a minimum oil viscosity of 500 SSU at 100°F. Some greases having these properties are:

   Shell - Alvania No. 2 Mobil - Mobilith AW2/Mobilith SHC100
   Texaco - Premium RB2 American - Rykon Premium 2

2. Lubricate bearings prior to extended shutdown or storage and rotate shaft monthly to aid corrosion protection.

Figure 11. Safety & Lubrication Instructions for Fans with Split Roller Bearings

WARNING

1. This equipment must not be operated without proper guarding of all moving parts. While performing maintenance be sure remote power switches are locked off. See AMCA Publication 410 for recommended safety practices.
2. Before starting: Check all setscrews for tightness, and rotate wheel by hand to make sure it has not moved in transit.

Relubrication Schedule (Months)* Spherical Roller Bearing - Split Pillow Blocks										Grease to be added at each interval
Speed (RPM)	**500**	**750**	**1000**	**1500**	**2000**	**2500**	**3000**	**3500**	**4000**	
Shaft DIA										
1 7/16" thru 1 15/16"	6	4½	4	4	3½	2½	2½	1	1	0.50 oz.
2 3/16" thru 2 11/16"	5	4½	4	2½	2½	1½	½	¼	¼	0.75 oz.
2 15/16" thru 3 15/16"	4½	4	3½	2½	1½	1	½			2.00 oz.
4 7/16" thru 4 15/16"	4	4	2½	1	½					4.00 oz.
5 7/16" thru 5 15/16"	4	2½	1½	1						7.00 oz.

*Suggested initial greasing interval - remove bearing cap and observe condition of used grease after lubricating. Adjust lubrication frequency as needed. Hours of operation, temperature, and surrounding conditions will affect the relubrication frequency required. Clean and repack bearings annually. Remove old grease, pack bearing full and fill housing reservoirs on both sides of bearing to bottom of shaft.

1. Lubricate with a multipurpose roller bearing NLGI No. 2 having rust inhibitors and antioxidant additives, and a minimum oil viscosity of 500 SSU at 100°F. Some greases having these properties are:

   Shell - Alvania No. 2 Mobil - Mobilith AW2/Mobilith SHC100
   Texaco - Premium RB2 American - Rykon Premium 2

2. Lubricate bearings prior to extended shutdown or storage and rotate shaft monthly to aid corrosion protection.

Static Oil Lubrication

1. Use only highest quality mineral oil with a minimum viscosity of 100 SSU at the oil's operating temperature. The oil's operating temperature is approximately 10° greater than the bearing's housing. SAE values having this viscosity at the following operating temperature are:

   150° - SAE 20 160° - SAE 30 180° - SAE 40

2. Static oil level should be at the center of the lower-most roller (Do not overfill.)
3. Complete lubrication change should be made annually.

Drive Maintenance

V-belt drives need periodic inspection and occasional belt replacement. When inspecting drives, look for dirt buildup, burrs or obstructions which can cause premature belt or drive replacement. If burrs are found, use fine emery cloth or a stone to remove the burr. Be careful that dust does not enter the bearings.

Check the sheaves for wear. Excessive slippage of belts on sheaves can cause wear and vibration. Replace worn sheaves with new ones. Carefully align sheaves to avoid premature sheave failure.

Observe belts for wear. If fraying or other wear is observed to be mostly on one side of the belts, the drives may be misaligned. Reinstall the drives according to instructions given for Fan Installation – Disassembled Units. Never use belt dressing on any belts.

When replacing belts, replace the entire set. After initial replacement and tensioning, recheck belt tension after a few days to adjust belt tension again. (New belts require a break-in period of operation.)

Bearing Maintenance

For instructions covering special lubrication intervals, bearing assembly or disassembly, or installation details, see attached documents. Any bearing which is disassembled should be kept separate from other bearing parts as components may not be interchangeable. Maintain cleanliness of components and bearings to prevent bearing contamination.

Bearing failure can occur from many causes. See Troubleshooting section for details.

Note: All speeds shown do not apply to all shaft sizes in that group. Consult the factory if in doubt of maximum speed for a particular bearing.

Lubrication

Proper lubrication of bearings helps assure maximum bearing life. All fans are equipped with decals indicating relubrication intervals for normal operating conditions. However, every installation is different and the frequency of lubrication should be established accordingly.

Experience has shown that airborne moisture and heavy dust will dramatically reduce the life of the bearing lubricant. If any of these adverse conditions exist, it is recommended that bearings be regreased after several days of operation. Lubrication intervals can then be adjusted based on the condition of the purged grease.

Figure 9 illustrates the decal for ball bearings, Figure 10 the decal for solid pillow block spherical roller bearings, and Figure 11 shows the decal for split pillow block spherical roller bearings. Observation of the condition of the grease expelled from the bearings at the time of relubrication is the best guide as to whether regreasing intervals and the amount of grease added should be altered. This observation is particularly important when bearings operate continuously over 160°F.

Greases are made with different bases. There are synthetic base greases, lithium base, sodium base, etc. Avoid mixing greases with different bases. They could be incompatible and result in rapid deterioration or breakdown of the grease.

All bearings are filled with grease before leaving the factory. When the fans are started, the bearings may discharge excess grease through the seals for a short period of time. Do not replace the initial discharge because leakage will cease when the excess grease has worked out. Sometimes the bearing has a tendency to run hotter during this period and one should not get alarmed unless it lasts over 48 hours or gets above 220°F. When relubricating, use a sufficient amount of grease to purge the seals. Rotate bearings during relubrication where good safety practice permits.

For bearings with oil lubrication, sight gauges are installed so that a proper level can be reviewed and maintained. Sight gauges should be read with bearings not rotating.

Wheel and Shaft Maintenance

Periodically inspect the shaft and wheel for dirt buildup, corrosion, and signs of excess stress or fatigue. Clean the components and, when appropriate, apply new coatings. (Any addition of coatings or weld can create an imbalance.) Check the balance of the assembly.

Structural Maintenance

All structural components or devices used to support or attach the fan to a structure should be checked at regular intervals. Vibration isolators, bolts, foundations, etc., are subject to failure from corrosion, erosion, and other causes. Improper mounting can lead to poor operation characteristics or fan fatigue and failure.

Check metallic components for corrosion, cracks, or other signs of stress. Concrete should be checked to ensure the structural integrity of the foundation.

Troubleshooting Guidelines

Use current safety practices when investigating fan or system performance problems. General safe practices and performance troubleshooting guidelines can be found in AMCA Publications 410 and 202, respectively. Fan application and field measurement procedures can be found in AMCA Publications 201 and 203.

Troubleshooting Performance Problems

The lists below indicate possible areas to check when air or sound values do not match expectations. Most fan problems can be pinpointed to one of these common causes.

Air Capacity Problems:

1. Resistance of system not at design rating. If resistance is lower than expected, both airflow and horsepower may be up. If resistance is higher than anticipated, air volume will be down.
2. Fan speed is not at design speed.
3. Air density not at design values. Also check air performance measurement techniques/procedures.
4. Devices for air modulation are closed or plugged. Also check filters.
5. Wheel mounted improperly or is rotating in reverse.
6. Parts of system or fan have been damaged or need cleaning.

Noise Problems:

1. Air performance is incorrect and fan is not at design point of operation. Fan forced to operate in an unstable flow region.
2. Bearing failure. Check bearings (lubrication).
3. Supply voltage high or inconsistent supply frequency. Adjustable frequency controllers can generate motor noise.
4. Objects which are installed in a high velocity airstream can generate noise. This includes flow sensors, turning vanes, etc.
5. Poor fan inlet conditions.
6. Acoustics or sound measurement procedure incorrect.

Vibration Problems:

1. Misalignment of drive components.
2. Poor foundations or mounting structure (resonances).
3. Foreign material attached to rotating components.
4. Damaged rotating components (bearings, shaft, fan, wheel, sheaves).
5. Broken, loose or missing setscrews.
6. Loose bolts.
7. Vibration transmitted by another source.
8. Water accumulating in airfoil blades.
9. Fan is operating in stall or unstable flow region.

NOTE: All fans manufactured by Twin City Fan & Blower are factory balanced prior to shipment. Handling and movement of the fan during shipment may cause the rotating assembly to shift. Balance should be checked once the fan is installed. If a final trim balance is required, it is the end user's responsibility to bring the fan back to factory specifications. Final trim balancing is not the responsibility of Twin City Fan & Blower.

Motor Problems:

1. Incorrect wiring.
2. Speed of fan too high.
3. Parts improperly installed - binding.
4. Bearings improperly lubricated.
5. WR^2 capability of motor too low for application.
6. Protection devices may be improperly sized.

Drive Problems:

1. Belts improperly tensioned.
2. Drive alignment is poor.

Bearing Problems:

Generally speaking, Twin City Fan & Blower uses three types of bearings:

1. Ball bearing with set screw lock.
2. Spherical roller bearings with set screw lock.
3. Spherical roller bearings with adapter lock/taper lock feature to attach them to the shaft.

Ball bearings – These are self-aligning bearings and should present no alignment problems with one exception: i.e., on Sealmaster bearings there is a pin beneath the grease fitting which prevents the bearings outer race from rotating. Should this pin jam, the bearing loses its alignment feature.

Common failure causes are (1) set screws loosening and shaft turning within the bearing, and (2) crowned bearing supports. Loosen one bolt and measure the clearance between the pillow block and the support. Add shim to compensate.

Spherical Roller Bearings with Set Screw Lock – The self-aligning characteristic of these bearings are inherent in the spherical roller design. The closer that these bearings are to perfect alignment, the cooler they will operate.

Common failure causes are the same as with ball bearings, mainly set screws loosening and crowned bearing supports.

Spherical Roller Bearings with Adapter Lock – Again, the self-aligning feature is inherent in the spherical design. Good alignment results in a cooler operating bearing. The faster the bearing operates the more critical this becomes.

A common cause of failure is improper installation practice. Removing too much clearance from the bearing can result in preloading the bearing, resulting in premature failure; and removing not enough can result in the shaft rotating within the bearing. Properly tightened, this method of attaching a bearing to a shaft is second only to a press fit. Crowned bearing supports can also preload these bearings and should be checked by loosening one side of the bearing and checking for clearance.

Lubrication – The major cause of bearing failure is contamination of grease, insufficient grease, or incompatibility of grease. If a fan is to be stored for any length of time at the job site, the bearings immediately should be filled with grease while rotating the shaft and then the bearings should be regreased and rotated monthly. This will prevent moisture, which condenses within the bearing, from corroding the raceways. Most greases used on fan pillow blocks are lithium base. Use the greases shown on the bearing decal. Do not mix the bases without completely purging out the initial grease.

Initially, follow the lubrication instruction on the side of the fan. The frequency of lubrication should be adjusted depending on the condition of the old grease being purged. This is the responsibility of the user. If the grease is dirty, the lubrication frequency should be more often.

a. Noise – If a bearing is increasing in noise intensity and/or vibration, it will probably result in failure.

b. Temperature – If a bearing temperature begins to gradually rise, it will generally result in failure. A bearing can operate up to 200 degrees and operate satisfactorily if the temperature remains constant and the bearing receives adequate lubrication. Remember that a roller bearing under the same load and speed will be somewhat more noisy and run warmer than a ball bearing. This is normal.

Rough handling and/or dropping a fan can result in brinelling the bearing. This appears as a clicking noise at first, then gradually worsens until failure.

When replacing a bearing, always align the bearings first, then bolt the pillow blocks to their support, rotate the shaft, fasten the bearings to it. If the bearing is fastened to the shaft first, tightening the pillow block bolts may bind the shaft and preload the bearings.

Limitation of Warranties and Claims

Seller warrants to the original purchaser that the goods sold hereunder shall be free from defects in workmanship and material under normal use and service (except in those cases where the materials are supplied by the buyer) for a period of one year from the date of original installation or eighteen (18) months from the date of shipment, whichever occurs first. The liability of seller under this warranty is limited to replacing, repairing, or issuing credit (at cost, F.O.B. factory and at seller's discretion) for any part or parts which are returned by buyer during such period provided that:

a. seller is notified in writing within ten (10) days following discovery of such defects by buyer, or within ten (10) days after such defects should reasonably have been discovered, whichever is less;

b. the defective unit is returned to seller, transportation charges prepaid by buyer.

c. payment in full has been received by seller or said products; and

d. seller's examination of such unit shall disclose to its satisfaction that such defects have not been caused by misuse, neglect, improper installation, repair, alteration, act of God, or accident.

e. seller cannot guarantee sound pressure levels or dBA.

No warranty made hereunder shall extend to any seller product whose serial number is altered, effaced or removed. Seller makes no warranty, express or implied, with respect to motors, switches, controls, or other components of seller's product, where such components are warranted separately by their respective manufacturers. THIS WARRANTY IS EXPRESSLY IN LIEU OF ALL OTHER WARRANTIES, EXPRESS OR IMPLIED, WHETHER STATUTORY OR OTHERWISE, INCLUDING ANY IMPLIED WARRANTY OF MERCHANTABILITY OR FITNESS FOR A PARTICULAR PURPOSE. In no event shall seller be liable to buyer for indirect, incidental collateral, or consequential damages of any kind. (BUYER'S FAILURE TO PAY THE FULL AMOUNT DUE WITHIN SIXTY (60) DAYS OF DATE OF INVOICE SHALL OPERATE TO RELEASE SELLER FROM ANY AND ALL LIABILITY OR OBLIGATION ARISING PURSUANT TO ANY WARRANTY, EXPRESS OR IMPLIED, WHETHER STATUTORY OR OTHERWISE, INCLUDING ANY IMPLIED WARRANTY OR MERCHANTABILITY OR FITNESS FOR A PARTICULAR PURPOSE, MADE IN CONNECTION WITH ANY CONTRACT FORMED HEREUNDER. BUYER AGREES THAT SUCH FAILURE TO PAY SHALL CONSTITUTE A VOLUNTARY WAIVER OF ANY AND ALL SUCH WARRANTIES ARISING PURSUANT TO SUCH CONTACT.)

Centrifugal Fans

Bearings

Before the unit is put into operation, tighten bearing collar setscrews and bearing anchor bolts. Rotate shaft to check alignment.

All grease lubricated bearings are completely filled with grease prior to shipment from the factory. This prevents the condensation of moisture in the pillow block during shipment and before the unit is installed.

The bearings will discharge excess grease through the seals for a short period of time after start-up. Do not replace this initial discharge, because leakage will cease after the excess grease has been purged from the bearings. Also, the purging of the excess grease will cause the bearing to heat up, but the heat will dissipate after the purging.

Observation of the amount of grease expelled from the bearing at the time of relubrication is the best guide as to whether the regreasing intervals and amount added should be altered. When regreasing, use lubrication instructions for fan ball bearings as outlined in IM-100 which is included with shipment. Avoid mixing different types of grease. Bearings should be flushed and refilled with fresh grease at approximately one-year intervals. DO NOT OVER LUBRICATE.

Couplings

Arrangement 7 and 8 direct drive fans, which are shipped completely assembled with motor and coupling mounted, should be checked for correct coupling alignment before putting the unit into operation. Also check lubricant, following manufacturer's recommendations for type and amount of lubricant used.

Foundations

A rigid, level foundation is essential for smooth and quiet operation, good performance, and low maintenance expenses. Inadequate foundations may lead to excessive vibration in well-balanced fans, resulting in possible premature failure.

Particular attention must be given to ensure a solid support for the rotating assembly, particularly in the area of the bearing and motor supports.

V-Belt Drive

On belt-driven units, position and anchor the motor slide base firmly to the foundation or bearing base. Mount the motor on the slide base and move the motor to the position closest to the the fan. The V-belt drive should be mounted as follows:

1. Remove dirt and corrosion from fan and motor shafts.
2. Coat bores of sheaves with grease or oil and mount sheaves on the shafts. Do not force the sheaves on the shafts by hammering as this will damage the fan and motor bearings.
3. Install the belts. Belts should be worked carefully over the grooves of each sheave until they are properly in place. Belts should never be forced on with a screwdriver or similar tool as this will break the cords in the belts. After the belts have been installed, adjust the sheaves so that both shafts are at right angles to the belts. See IM-101 for alignment procedure. Once proper alignment is assured, tighten sheaves in place.
4. Take up slack by adjusting the motor slide base. Proper belt tension is important. If belts are too tight, undue wear on fan and motor bearings will result. Insufficient tension shortens belt life and may cause vibration. Use drive manufacturer's recommendations for correct belt tension.
5. **IMPORTANT!** BEFORE PUTTING THE UNIT INTO CONTINUOUS OPERATION, INSTALL BELT GUARD.
6. After several days of operation, check belt tension and sheave alignment.

Safety Practices

1. Do not operate fan at speeds in excess of factory specified limits for each construction class.
2. Where applicable, provide inlet or outlet screens to prevent objects from entering the fan.
3. Provide adequate guards over rotating parts, belt guard, shaft guards, and coupling guards.
4. Locate a disconnect switch with padlock at fan for maintenance personnel. Also provide means for locking out primary power where possible.
5. Provide vibration limiting switches to detect sudden change in fan operation, particularly on critical applications such as high speed, high temperature, or in erosive or corrosive atmospheres.

See AMCA Publication 410, Revision 2, for additional safety practices.

©2005 Aerovent

Wheel Clearance

Adjust clearance by moving the wheel axially on the shaft. The following table indicates the correct measurements for positioning the BI and BIA wheels. Proper positioning is important in attaining correct fan performance, particularly on the BI and BIA wheels.

Type BI & BIA (SWSI Units)

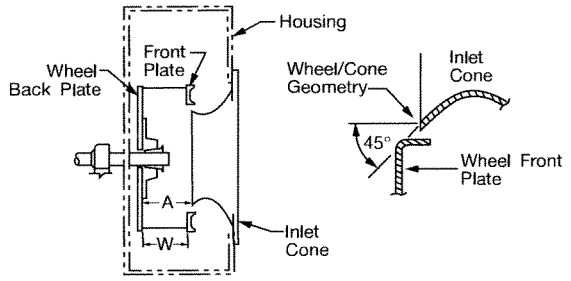

SIZE	A	W*
12	$4^{11}/_{16}$	$4^{7}/_{16}$
14	$5^{9}/_{32}$	$5^{1}/_{32}$
16	$5^{29}/_{32}$	$5^{21}/_{32}$
18	$6^{23}/_{32}$	$6^{3}/_{8}$
20	$7^{7}/_{16}$	$7^{1}/_{16}$
22	$8^{5}/_{16}$	$7^{15}/_{16}$
25	$9^{5}/_{16}$	$8^{15}/_{16}$
28	$10^{17}/_{32}$	$10^{1}/_{16}$
32	$11^{27}/_{32}$	$11^{11}/_{32}$

SIZE	A	W*
35	$13^{15}/_{16}$	$12^{3}/_{4}$
39	$14^{27}/_{32}$	$14^{3}/_{16}$
44	$16^{9}/_{16}$	$15^{7}/_{8}$
49	$18^{9}/_{16}$	$17^{23}/_{32}$
55	$20^{7}/_{8}$	$19^{27}/_{32}$
63	$23^{3}/_{4}$	$22^{11}/_{16}$
71	$26^{19}/_{32}$	$25^{1}/_{2}$
79	$29^{5}/_{8}$	$28^{11}/_{32}$

*100% Wheel Width

"A" dimension (inside edge of inlet cone to inside face of wheel backplate) must be held. This dimension is critical to fan performance. "A" dimension shown is based on 100% wheel width "W" and must be adjusted if wheel furnished is other than 100% full width.

Type BIUB

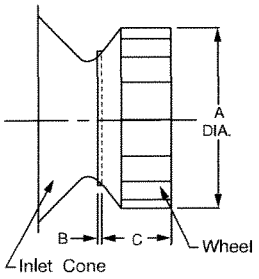

SIZE	A	B	C
12	12.25	0.32	4.28
13	13.50	0.34	4.84
15	15.00	0.38	5.38
16	16.50	0.44	5.81
18	18.25	0.56	6.44
20	20.00	0.63	7.00
22	22.25	0.69	7.84
24	24.50	0.75	8.63
27	27.00	0.88	9.47
30	30.00	0.97	10.56
33	33.00	1.06	11.63
36	36.50	1.10	13.03

Type BW, OW, PB & HPB

These radial blade wheels do not require precise positioning to attain the correct performance. The important thing is to centrally locate these wheels axially within the housing to ensure adequate running clearance and to maintain concentricity with the fan inlet.

Type AW

These wheels require a special inlet on the housing which must extend into the wheel inlet flange to perform properly. Other than maintaining a minimum ¼" overlap, adequate running clearance and concentricity are all that is required.

Type FC

The forward curve blower employs a shallow venturi in the housing to guide the air into the wheel. The depth of this venturi is approximately one-tenth the wheel diameter. Clearance between the wheel and venturi should be the smallest allowable and still maintain normal running clearance. This axial separation is approximately ¼" and should be measured at four points approximately 90° apart.

Maintenance

Regular and systematic inspection of all fan parts is the key to good fan maintenance. Frequency of inspection is determined by the severity of the application and local conditions. Once a maintenance schedule is established, it should be strictly followed. Regular fan maintenance should include the following:

1. Check fan wheel for any build-up of foreign material or excessive wear from abrasion. Both can cause vibration which creates a serious safety hazard. Any build-up of foreign material should be removed. If the wheel shows excessive wear, replace it immediately.
2. On belt driven units, check V-belt drive for proper alignment and tension. If belts show wear, they should be replaced with a matched set of belts. If unit is direct driven, check coupling alignment.
3. Lubricate the bearings (see bearing section for lubrication specifications). On direct drive units, lubricate the coupling (see coupling section).
4. Lubricate shaft seal with the same grease as used on the fan bearings. IMPORTANT: The operating life of the shaft seal is dependent upon the amount and frequency of lubrication. Insufficient grease in the shaft seal may result in damage to the seal and reduced sealing efficiency.
5. A final check on the tightness of all setscrews and bolts completes the maintenance routine.

Aerovent

IM-100
April 2006

General Installation, Operation and Maintenance Instructions For Aerovent Products

Introduction

This manual has been prepared to guide the users of Aerovent equipment in the proper installation, operation and maintenance procedures to insure maximum equipment life and trouble-free operation.

Receiving

Products leaving the assembly plant have been inspected and are in satisfactory operating condition. The carrier assumes full responsibility for material from the time it leaves the plant until it is delivered to the user. Therefore, material should be inspected for damage immediately so that any damage claims against the carrier can be made before acceptance of the shipment. No equipment is to be returned without an authorized returned goods tag.

Handling

All products must be handled with extreme care to avoid misalignment of rotating components. Never lift a unit assembly by using the shaft, drive sheaves, wheel or motor as a point of attachment. If it is apparent that slings will not clear a portion of the product being hoisted, a spreader should be used to avoid damage.

Initial Operation

All Aerovent fans are lubricated at the factory and have been given a run-in test before shipment. Read carefully all installation and maintenance manuals before following the startup check list.

Safety Precautions

Any piece of machinery should be treated with respect and not overconfidence. Overconfidence usually leads to carelessness and carelessness leads to injury. Following is a list of DOs and DO NOTs:

DO

1. Make sure the unit is stopped and electrical power is locked out before putting hands into the inlet or outlet openings or near the belt drive. A warning sign on the START SWITCH cautioning not to start is recommended when the unit is being serviced.
2. Follow maintenance instructions.

DO NOT

1. Put hands near or allow loose or hanging clothing to be near belts or sheaves while the unit is running.
2. Put hands into inlet or outlet while the unit is running. It is sometimes difficult to tell whether or not a fan is running.... be sure it is not running and cannot be operated before any inspection.

Startup Checklist

1. Inspect the equipment for any shipping damage. Remove any foreign material such as tags or packing from any moving parts or from within the fan housing.
2. Compare the voltage, hertz, and phase stamped on the motor with the current characteristics of the line to which the motor is to be connected.
3. Lock out the power source at the disconnect switch.
4. Turn motor, drive, and propeller by hand to see that no misalignment has taken place in shipment. Check V-belt drive for proper alignment and belt tension.
5. Check all bolts, screws and fasteners and tighten if necessary. Make certain all set screws, locking collars and bearing mounting bolts are secure.
6. Secure and check clearance of access doors, belt guards and inlet and outlet guards.
7. If equipped with dampers, check for correct linkage operation. Make sure that the operator opens or closes these control devices to the proper positions.
8. Jog the fan electrically and note the rotation. Reverse two electrical leads, if necessary, to obtain proper rotation as marked with rotation arrow on fan. Do not allow the propeller to run backwards except momentarily.
9. **Centrifugal Fans:** Close dampers as required for adequate system resistance to prevent the motor from overloading.

CAUTION: With fans that use the forward-curve or radial type of wheel, it is possible to overload the motor if the fan is operated at a lower static pressure than that which the fan is rated. Check the catalog rating of the fan for proper speed and resistance.

10. Start the fan and observe its operation.
11. Take a motor amp reading and compare with the amp rating on the motor. (The actual running amps should not exceed motor nameplate amps x service factor, exceptions may be taken for air over motors.)

Fan Balance

Fan propellers are statically and dynamically balanced within acceptable tolerances at the factory. Damage in shipping and handling or poor installation of the unit may upset the unit balance. A propeller that is not properly balanced can lead to excessive vibration causing undue wear on the entire unit. It is recommended that after installation a vibration test be made on the fan by an experienced technician.

CAUTION: For units furnished less final drive components at customer request, the addition of drive components in the field can create critical vibration modes. Aerovent strongly recommends a final unit balance procedure after all rotating components are installed. Failure to do so voids Aerovent's warranty.

©2006 Aerovent

All Aerovent fan assemblies are statically and dynamically balanced to Balance Quality Grade G6.3. Each fan is factory run tested for vibration in accordance with ANSI/AMCA 204-96 "Balance Quality and Vibration Levels for Fans" to Fan Application Category BV-3, to the following peak velocity values, filter-in, at the fan test speed:

Fan Application Category	Rigidly Mtd. (in./sec.)	Flexibly Mtd. (in./sec.)
BV-3	0.15	0.20

Vibration measurements, when possible, should be taken at each fan shaft bearing in two planes perpendicular to the axis of rotation (planes to have 90 degree interval), and one measurement parallel to the axis of rotation. On direct drive units, the perpendicular measurements will be taken at each end of the motor casing, taking care not to take measurements on the fan shroud on TEFC motors. The axial measurement can be taken on the motor foot or mounting base. In some cases, primarily on axial flow units, it will not be possible to take measurements at the bearings or motor. On these units, the measurements should be taken on the inner shell near the bearings. If this is not possible, then take the readings on the outer shell near the bearing locations.

If vibration is excessive, shut down the fan and determine the cause.

Common Causes of Excessive Vibration

1. Support structure not sufficiently rigid or level. Vibration amplified by resonance in ductwork or support structure.
2. V-belt drive misalignment. Belt tension is too tight or too loose.
3. Bearing locking collar or mounting bolts loose. Propeller set screw loose.
4. Material accumulation on propeller.
5. **Centrifugal Fans:** Wheel rubbing on inlet cone.

Motors

Most integral horsepower totally-enclosed motors have drain plugs in the end bells for drainage of condensation. On all roof ventilators, the bottom or lower plug has been removed for continuous drainage.

All other style fans are shipped with the drain plugs installed. The user should remove the proper drain plug. For horizontally mounted units with the motor in the airstream, remove the downstream drain plug. For vertically mounted units, remove the bottom or lower drain plug.

With motors supplied by the user, drain plugs may not have been provided. Check with the motor manufacturer regarding drainage and condensation.

Lubrication Instructions for Ball Bearing Motors

Grease-lubricated bearings, as furnished, are adequate for a long period of operation without relubrication. A good maintenance schedule for regreasing will vary widely depending on motor size, speed and environment.

The table below suggests relubrication intervals for motors on normal, steady running, light duty indoor loads in relatively clean atmosphere at 40°C (105°F) ambient temperature or less. Fractional horsepower motors follow a schedule similar to that shown under frames 143T to 215T.

Motor Lubrication Intervals

TYPE OF ENCLOSURE	INSULATION	FRAME SIZE 143T–215T	254T–326T	364T–449T
Open-DP	B	2 yrs.	18 mos.	1 yr.
Enclosed-FC Open-DP	B F	18 mos.	1 yr.	9 mos.
Enclosed-NV Enclosed-FC Open-DP Enclosed-Lint Free-FC	B F H B	1 yr.	9 mos.	6 mos.
Enclosed-NV Enclosed-FC Enclosed-Lint Free-FC	F H F	9 mos.	6 mos.	3 mos.

NOTE: For motors over 1800 RPM, use ½ of tabled period. For heavy duty, dusty locations, use ½ of tabled period. For severe-duty high vibration/shock, use ⅓ of tabled period.

VOLUME - REFERENCE TABLE

SHAFT DIAMETER (AT FACE OF BRACKET)	AMOUNT OF GREASE TO ADD
¾" to 1¼"	1/8 cu. in. or 0.1 oz.
1¼" to 1⅞"	1/4 cu. in. or 0.2 oz.
1⅞" to 2⅜"	3/4 cu. in. or 0.6 oz.
2⅜" to 3⅜"	2 cu. in. or 1.6 oz.

Motors with no provision for lubrication are equipped with sealed bearings and require no maintenance. Motors mounted in inaccessible locations are provided with extended grease lines to facilitate lubrication if provisions for lubrication are provided. The bearings are equipped with relief fittings to prevent over-lubrication. The grease lines are filled with lubricant at the factory.

Procedure for Relubrication

1. Stop motor.
2. Remove grease relief plugs in bearing housings.
3. Grease with hand gun until new grease appears at relief hole.
4. Run motor for ten (10) minutes before replacing relief plugs.

CAUTION: Do not over-lubricate. This is a major cause of bearing and motor failure. Make sure dirt and contaminants are not introduced when adding grease.

Type of Grease

Lubricate with the following greases or their equivalent:

Amoco Rykon Premium #2
Chevron BRB-2 – Standard Oil or Calif.
SRI-2 – Standard Oil Company
Alvania #2 – Shell Oil Company
Mobilith AW2

For motors lubricated with special greases, check lubrication tag on motor.

Lubrication Instructions for Fan Ball Bearings

Bearings and grease lines on belt driven fans are lubricated in assembly. When lubrication is required, add grease slowly while the shaft is rotating until grease comes rapidly out of the seal.

For extreme conditions, lubricate according to experience. For normal conditions, lubricate the bearings with Mobilith AW2 or an equivalent.

Bearings and grease lines on axial fans that are ordered for high moisture or above normal temperatures have been lubricated with a special lubricant, Plastilube #2. Lubricate at regular intervals with Plastilube #2 as indicated in the special lubrication chart listed below. Plastilube #2 is available from Sulflo, Inc. 1158 Erie Avenue, North Tonowanda, New York 14120.

Special Lubrication Frequency For High Temperature and High Moisture

AIRSTREAM TEMPERATURE	HOURS
TO 250°F	4500
TO 350°F	1500
TO 500°F	1000
WET ATMOSPHERE AT ROOM TEMPERATURE	1000 TO 1500

Storage of Equipment

Fan Bearings

Since bearings tend to "breathe" on equipment stored in areas with other than a constant temperature, moisture will condense internally. Therefore, it is necessary to keep the bearings completely full of grease and periodically rotated to make certain that all internal parts are coated with grease. Even a full bearing will eventually pick up moisture and, therefore, must be periodically purged with new grease.

Grease should be purged from the bearings to remove condensed moisture, and the fan wheel rotated by hand every thirty (30) days. This practice should be done more often if weather is severe or if there is a wide variation in temperature.

CAUTION IN PURGING: The fan should be rotated while greasing and high pressure pneumatic greasers should be avoided. See "Lubrication Instructions for Fan Ball Bearings."

To rotate the fan, follow the procedure listed below:

The blade marked number 1 should be rotated to top center. The blade number and date should be recorded in a log book which is to be stored in a protective pouch attached to the fan. During storage, the fan propeller should be rotated by hand at least ten (10) revolutions every thirty (30) days to circulate the lubricant in the bearings in the motor or on the fan shaft. After the tenth revolution, stop with a blade at top center which is not the same one as is listed for the previous date in the log book.

Fans which are V-belt driven should be prepared for storage as follows:

Carefully remove the belts, coil them (without kinks) in matched sets and place them in a heavy carton. Mark the carton with fan identification and store the carton in a dry, well-ventilated area. Belts must not be left exposed to sunlight or subjected to storage ambient conditions exceeding 85°F, 70% relative humidity. Belts which show signs of deterioration should be replaced prior to startup. Before reinstalling belts, review the section on "Belt Tension."

NOTE: Procedures for storage of Aerovent equipment as outlined above are intended as a general guide only. Storage conditions will vary depending on the location. Common sense and practical experience should determine to what extent the above procedures will be followed.

Motors

Motors must be stored under cover in a clean, dry, vibration-free location. Remove sufficient packaging material to allow circulation of air around the motor. Maintain the temperature of the windings a few degrees above that of the surrounding air to protect against condensation. If the motor is equipped with internal heaters, the heaters should be energized throughout the storage period to prevent this condensation. If the motor does not have internal heaters, this can be accomplished using any other safe, reliable method of heating. Measure and record the ambient air temperature and winding temperature monthly.

In the event that the motor is not equipped with internal heaters and space heating equipment is unavailable, wrap the motor as tightly as possible with heavy duty polyethylene. Enclose bags of desiccant (such as silicagel) with the motor to minimize moisture problems. Check the desiccant regularly and replace it periodically as dictated by climate requirements.

To prevent rusting of bearing parts, the rotor must be rotated at regular intervals (30 days) to assure these parts are well covered with oil or grease.

Prior to energizing the motor, it is to be inspected and meggered by a motor manufacturer's field service engineer. The charges for this service to the customer will be in accordance with the manufacturer's published service rates in effect at the time of the inspection.

In addition, it is strongly recommended that the motor manufacturer be contacted for specific long-term storage instructions.

Lubrication Frequency for Horizontal Shaft Installations (see Note for vertical shaft installations)

SHAFT SIZE (INCHES)	LUBRICATION FREQUENCY									
	OPERATING SPEED (RPM)									
	500	1000	1500	2000	2500	3000	3500	4000	4500	5000
	RELUBRICATION CYCLE (MONTHS)									
½ – 1	6	6	6	6	6	6	4	4	2	2
1 1/16 – 1 7/16	6	6	6	6	6	6	4	4	2	1
1½ – 1¾	6	6	6	4	4	2	2	2	1	1
1⅞ – 2 3/16	6	6	4	4	2	2	1	1	1	
2¼ –2 7/16	6	4	4	2	2	1	1	1		
2½ – 3	6	4	4	2	1	1	1			
3 7/16 – 3½	6	4	2	1	1	1				
3 15/16 – 4	6	4	2	1	1					

NOTES: Reduce this lubrication frequency schedule by half for vertical shaft installations. Consult manufacturer for specific recommendations.

Fan Bearing Replacement Procedure

It is important to follow the assembly and alignment procedure when making an installation of replacement bearings. Inspect the shaft for wear at the bearing mounting positions. Shaft diameter should not be undersized more than commercial ground and polished tolerances. Excessive undersizing will result in rapid wear.

1. Place new bearings loosely on the shaft. Locking collars may be located on either end of the bearings for ease of installation. The illustration shows one locking collar on the drive end and one locking collar on the fan end which is typical for a tubeaxial type fan. A typical SWSI centrifugal fan would have both collars mounted on the sheave side of the bearings. Drop the mounting bolts in place, snug them and adjust the position of the shaft with proper spacing at either end.
2. Center both ends of the shaft in the housing of tubeaxial fans using the propeller as a guide. On centrifugal fans, the shaft is positioned 90° to the scroll side with the wheel inlet centered in the scroll inlet. Use the clearance in the mounting holes for horizontal adjustment and shims, if necessary, for vertical adjustment.

Figure 1. Two Bearing Drive

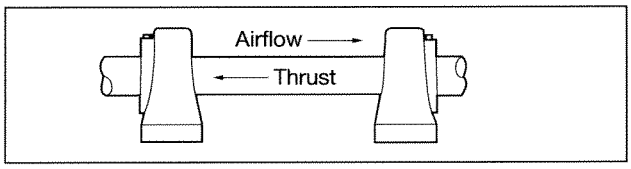

3. Tighten the bearings to the base plate and check the position of the shaft again. Before tightening the locking collars, be sure the shaft and bearings are in proper alignment. The shaft should slide freely end to end.
4. Tighten the eccentric cam locking collar of the bearing at the propeller/wheel end. (The locking collar design provides a positive lock of the wide inner ring bearing to the shaft. To tighten, turn the locking collar in the direction of shaft rotation to the lock position, then tighten the collar set screw.) Repeat this procedure for the sheave end locking collar on DWDI and open wheel centrifugals. For other fan types, proceed to Step 5.
5. Axial flow propellers and single inlet centrifugal wheels with back plates exert an air thrust toward the fan inlet. To help balance the bearing loading, we allow the fan end bearing (belt driven units) to carry the majority of this thrust loading while the sheave end bearing carries most of the radial load. (Direct coupled units would be just the opposite.) To accomplish this, grasp the sheave end of the shaft and pull or push on it toward the fan inlet. At the same time, tap the locking collar of the sheave end bearing (fan end on direct coupled units) in the opposite direction with a soft mallet.
6. The final step is to tighten the sheave end bearing eccentric cam locking collar while maintaining constant pressure on the shaft toward the fan inlet.

For special heavy duty bearings, a spring locking collar is used. The two knurled cup-point set screws extend through the inner ring of the bearing and lock firmly onto the shaft. Tighten the propeller end collar first, then take hold of the sheave end of the shaft, pull and then tighten the locking collar. The locking collar is tightened by using the two set screws mentioned above.

Replacing Fan Belts

Worn belts may be easily replaced without removing the fan from the system.

1. Loosen the motor hold-down bolts and move the motor toward the fan. (This is done by turning a jackscrew which is a part of the motor base on models having larger motors.) The belt may be slipped off the motor sheave and then easily removed from the sheave on the propeller shaft.
2. Check the numbers on the belt and make the replacement with a belt having the same length and section.
3. Adjust the motor outward to tighten the belt (see instructions on belt tension, below) and tighten the motor hold-down bolts. Be sure that the motor is not cocked at an angle and that the end face of the motor sheave is parallel to the end face of the driven sheave.

Belt Tension Procedure

Belt tension is very important to the proper operation of a fan and to the service life of a V-belt drive. A new fan will be received with its belts properly adjusted; however, all V-belts stretch in the first few hours of operation. It is necessary to readjust the belt tension after eight hours of running. After 100 hours the belts should again be adjusted. Thereafter, periodic inspection is recommended so belts may be adjusted or replaced when necessary.

1. To adjust the belts, loosen the motor hold-down bolts. Tighten the belt using the motor base adjusting screw until the belt appears to be taut. You should be able to deflect the belt slightly by squeezing the two sides between thumb and forefinger and the belt should snap back into position when released.
2. Retighten the motor hold-down bolts and start the fan. If the belt screeches on startup it is too loose and should be tightened further.
3. Allow the fan to run for a while, stop the fan, and check the temperature of the sheave with your hand. If the sheave is too hot to touch, the belt is probably too tight.

V-belt drives on Aerovent fans are purposely sized to handle considerably more load than would be necessary for normal drive design. This is done to prolong the life of the drive and provide for minimum maintenance. Belts should be replaced when they have obviously become worn, even though they are still operating. A badly worn belt will also cause undue wear of the sheave. Replace belts when they show definite signs of wear; otherwise the sheaves will become worn to the point where they also must be replaced. Never put new belts on a badly worn sheave. This will reduce the capacity of the drive and cause excessive belt wear.

Most Aerovent fans are provided with an adjusting screw as a part of the motor base for easy setting of belt tension. However, small fans or fans using small horsepower motors may have only a slotted base plate. When the belt tension is adjusted by moving a motor on a slotted base, be sure to block the motor tightly and squarely before tightening the hold-down bolts, keeping the motor sheave in line with the belt. The motor sheave must be parallel to and in line with the fan sheave.

When you make replacement of belts on a multi-groove drive, be sure they are used in a matched set. If you are not sure the belts are matched, observe them in operation. The tight side should be perfectly straight and the belts should run smoothly and in line. The slack side should bow out and also be in line. If one of the belts extends out considerably farther than another, it is an indication that the belts are not matched and should be changed. If there is only a slight difference, the normal stretching in the first hours of operation will equalize the belt lengths and the belts will be well matched.

Adjusting Variable Pitch Sheaves

Many Aerovent belt driven fans are furnished with variable-pitch motor sheaves. Sheaves may be adjusted for lower fan speeds without concern of overloading motors. When adjusting sheaves to increase the fan speed, check the motor current to be sure the motor is not overloaded. Keep the motor current within the nameplate and service factor ratings.

The sheaves used are easily adjusted. They come in various styles, depending upon the size drive and motor shaft. They are all fitted with hollow head knurled point safety set screws.

The following steps should be taken to adjust the pitch diameter.

1. Release belt tension and remove the belt or belts from the sheave.
2. Loosen the set screw and remove the key holding the adjustable half of the groove (keys used on styles 2, 3, 5 and 6 only). With styles 3 and 6, it may be necessary to remove the sheave from the shaft to remove the key.
3. Rotate the adjustable half of the sheave out for a smaller pitch diameter (decreased speed) or in for a larger pitch diameter (increased speed). Each one-half turn will change the pitch diameter one-tenth of an inch. Adjust two-groove sheaves the same amount on each groove. 4L or A belts will operate satisfactorily with the sheave fully closed to a maximum of five full turns open. 5L or B belts will operate satisfactorily with the sheave one full turn open to a maximum of six full turns open. (This will insure full contact of the sheave in the groove.)
4. Replace the key and tighten the set screw to lock the sheave half in position.
5. Replace the belts and tighten to the proper tension. If an extreme amount of adjustment has been made, it may be necessary to replace belts with another length.

Figure 2. Types of Sheaves

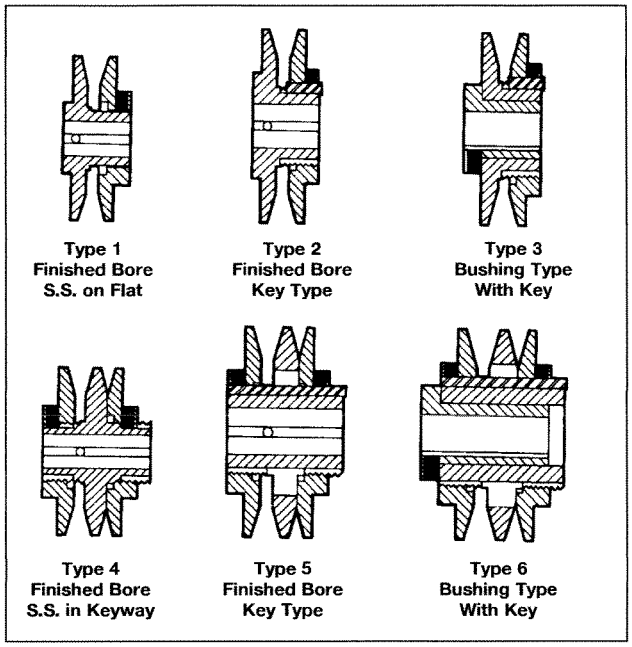

V-Belt Drive Alignment

Proper alignment and balance of the V-belt is as important as a well-balanced propeller. To insure smooth fan operation, the following should be checked:

1. The fan and motor sheaves must be in axial alignment. Shafts are parallel in both the vertical and horizontal planes (Figure 3).

Figure 3. Fan and Motor Sheave Axial Alignment

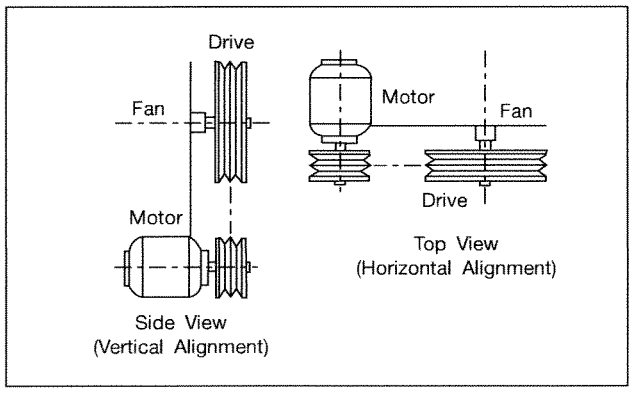

2. The fan motor sheave must be in radial alignment. When sheaves are of equal width, align with a straightedge (Figure 4a). When sheaves are of unequal width, align the center of the sheaves (Figure 4b).

Figure 4. Sheave Alignment

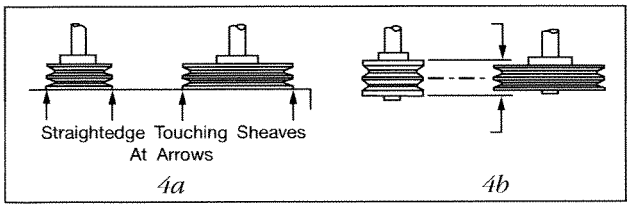

3. Sheaves must have no noticeable eccentricity.
4. Belts must have the proper tension. Belts either too loose or too tight cause vibration and excessive wear (Figure 5). See instructions for belt tension adjustment procedure.
5. After proper installation of drives, recheck the complete assembly for smoothness of operation.

Figure 5. Proper Belt Tension

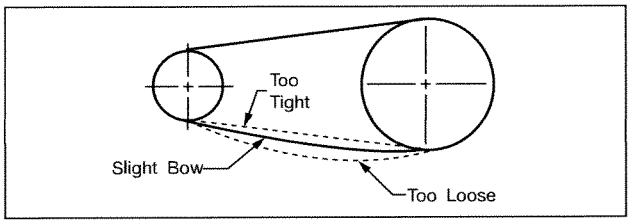

Flexible Couplings

Direct-coupled fans, which are received factory assembled, on a common base plate, are accurately aligned before shipment. However, base plates are flexible to some extent and therefore must not be relied upon to maintain the factory alignment. Realignment is necessary after the fan has been leveled, grouted, and the foundation bolts tightened. Also, check the lubricant, where applicable, following the manufacturer's recommendations for the type and amount of lubricant.

For field installation, the coupling should be mounted as follows:

1. Remove dirt or rust from fan and motor shafts and coat with grease or oil for ease of mounting.
2. Check fan and fan shaft alignment, making sure that the bearings are secure. Mount the fan shaft coupling half flush to the end of the shaft and secure.
3. Mount the motor shaft coupling half flush to the end of the shaft and secure.
4. Move the motor into position, with the coupling faces separated by the coupling manufacturer's specified gap.
5. With a straightedge, tapered wedge, or a feeler gauge, check for parallel and angular alignment (Figure 6a).
6. Align the shafts until a straightedge appears to be parallel to the shafts. Repeat at three additional points at approximately 90° from each other (Figure 6b). Recheck the hub separation gap.
7. For more accurate alignment, use a dial indicator clamped on one hub. With the dial button resting on the other hub, rotate the hub on which the indicator is clamped and observe the indicator reading. Take readings at four locations, 90° apart. With correct alignment, the faces of the couplings should be parallel within 0.002".
8. Once proper alignment is assured, secure the motor, examine the alignment, complete the assembly, and lubricate the coupling (when required) before putting the unit into operation.

Figure 6. Flexible Coupling Alignment

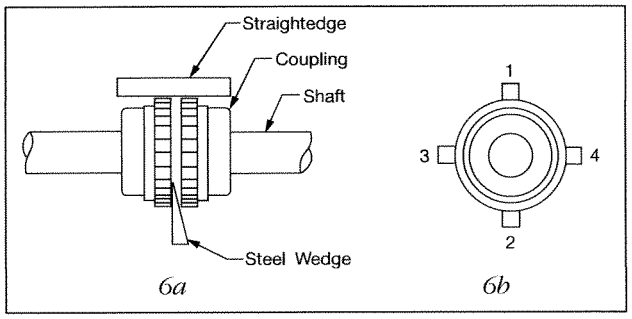

Propeller/Wheel Alignment

Fans, which are received factory assembled, have the propellers already aligned and in place before shipment. However, fans being flexible to some extent are sometimes subject to movement during shipment. To insure smooth operation and proper performance, the following propeller alignment should be checked before putting a fan into operation.

Propeller Fan Alignment

The fan shaft should be centered and parallel to the fan casing. Center by checking gap (B) between the propeller tip and the fan casing. Repeat at three additional points at approximately 90° from each other (Figure 7b). Parallelism can be observed by measuring the axial distance (A) from one blade to the end of the fan casing at four points at approximately 90° from each other (Figure 7a).

Figure 7. Propeller Fan Alignment

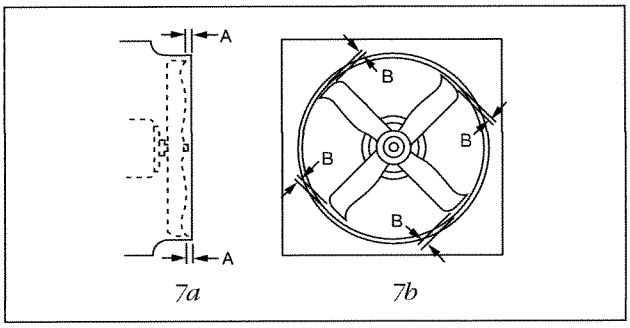

Do not confuse parallelism with blade track (axial deviation of one blade to another). Blade track can be checked by measuring the axial distance from one point on the fan casing to the same point on each blade as it passes by. (Some blades are mistracked for balancing.)

While checking the propeller alignment, it is good practice to check its rotation. Normally the fan rotation is marked by arrows on both the propeller and the fan casing. If omitted, obliterated, or misapplied, check for proper rotation as in Figure 8.

Figure 8. Checking for Proper Rotation

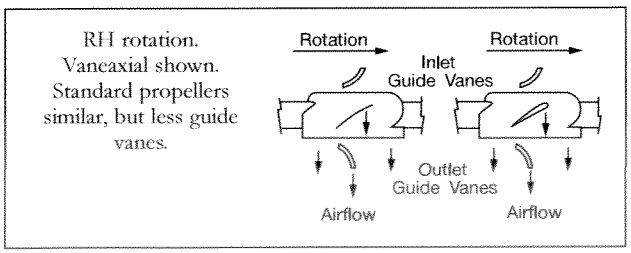

Centrifugal Fan Alignment

The fan shaft should be approximately centered in the clearance hole in the fan housing and perpendicular to the housing sides.

Adjust the clearance by moving the wheel axially on the shaft. The following table indicates the correct measurements for positioning the BI and BIA wheels. Proper positioning is important in attaining correct fan performance, particularly on the BI and BIA wheels.

Type CB & CBA (SWSI Units)

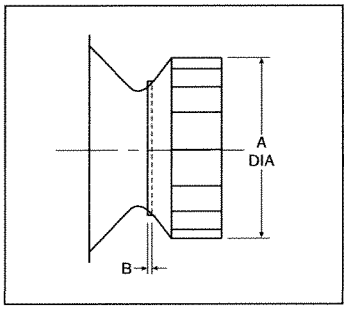

CB & CBA SWSI Wheel Placement											
Size	122	135	150	165	182	200	222	245	270	300	330
A	12.25	13.50	15.00	16.50	18.25	20.00	22.25	24.50	27.00	30.00	33.00
B	0.32	0.34	0.38	0.44	0.56	0.63	0.69	0.75	0.88	0.97	1.06

Size	365	402	445	490	542	600	660	730	807	890
A	36.50	40.25	44.50	49.00	54.25	60.00	66.00	73.00	80.75	89.00
B	0.94	1.03	1.13	1.25	1.38	1.56	1.69	1.88	2.09	2.28

"B" dimension must be held. This dimension is critical to fan performance.

Type BIUB

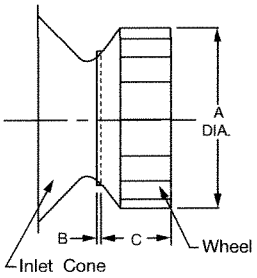

SIZE	A	B	C
12	12.25	0.32	4.28
14	13.50	0.34	4.84
15	15.00	0.38	5.38
16	16.50	0.44	5.81
18	18.25	0.56	6.44
20	20.00	0.63	7.00
22	22.25	0.69	7.84
24	24.50	0.75	8.63
27	27.00	0.88	9.47
30	30.00	0.97	10.56
33	33.00	1.06	11.63
36	36.50	1.10	13.03

Type CA, BW, OW, PB & HPB

These radial blade wheels do not require precise positioning to attain the correct performance. The important thing is to centrally locate these wheels axially within the housing to insure adequate running clearance and to maintain concentricity with the fan inlet.

Type AW

These wheels require a special inlet on the housing which must extend into the wheel inlet flange to perform properly. Other than maintaining a minimum ¼" overlap, adequate running clearance and concentricity are all that is required.

Type FC

The forward curve blower employs a shallow venturi in the housing to guide the air into the wheel. The depth of this venturi is approximately one-tenth the wheel diameter. Clearance between the wheel and venturi should be the smallest allowable and still maintain normal running clearance. This axial separation is approximately ¼" and should be measured at four points approximately 90° apart.

Installation Instructions for Propellers Equipped with Browning Malleable Iron Split Taper Bushings

Many Aerovent fans are furnished with split taper bushings for mounting the propeller to the shaft. When properly assembled, the bushings grip the hub with positive clamping action.

1. The bushing barrel and the bore of the propeller are tapered. This assures concentric mounting and a true running propeller.
2. Capscrews, when tightened, lock the bushing in the propeller. Use special plated capscrews threaded full length furnished by Aerovent.
3. The bushing is split so that when the locking capscrews force the bushing into the tapered bore, the bushing grips the shaft with a positive clamping fit. This will withstand vibration and punishing loads without being loosened.
4. The propeller and bushing assembly is keyed to the shaft and held in place by compression. This gives added driving strength.

   Before assembly, be sure that the shaft and keyway are clean and smooth. Check the key size with both the shaft and bushing keyways.
5. To assemble, put the capscrews through the clearance holes in the bushing and put the bushing loosely into the propeller. Do not press or drive. Start the capscrews by hand, turning them just enough to engage the threads in the tapped holes on the propeller. Do not use a wrench at this time. The bushing should be loose enough in the propeller to move slightly. Slide the propeller and bushing assembly onto the shaft, making allowance for end play of the shaft to prevent rubbing. Install the key into the keyway. Do not force the propeller and bushing onto the shaft. If it does not go on easily, check the shaft, bushing and key sizes once again.

Tighten the capscrews progressively with a wrench. Do this evenly as in mounting an automobile wheel. Tighten each capscrew part of a turn successively until all are tight. These capscrews force the taper bushing into the hub which in turn compresses the bushing onto the shaft. This makes a positive clamping fit. The torque must not exceed that shown in the table on page 8.

WARNING: Do not attempt to pull the bushing flange flush with the hub end. There should be a clearance which varies approximately 3/16" to ¼" with the bushing size when tightened. (Note: This is not a locating dimension.)

Capscrew Torque Values

BUSHING NO.	DIAMETER	LENGTH (IN.)	TORQUE FT. LBS.
H	¼-20	1¼	7½
P-1	5/16-18	1½	13
P-2	5/16-18	1¾	13
Q-2	⅜-16	2½	24
R-2	⅜-16	3	24

Removing Propeller Assembly from Shaft (see Figure 9)

1. Remove all capscrews from the propeller and hub assembly.
2. Start capscrews into the threaded holes in the bushing flange.
3. Tighten each bolt successively part of a turn to force the propeller off the bushing. This forces the bushing loose from the propeller and releases the compression so that the entire assembly will slide from the shaft.
4. Pull the bushing off the shaft. If the assembly has been in place some time, it may be necessary to use a wheel puller to remove the bushing. Never use a wheel puller on the propeller.

Figure 9. Removing Propeller Assembly

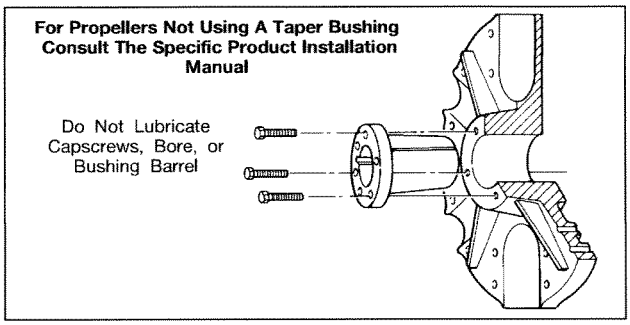

Typical Motor Current and Starter Size

Amperes shown in the table below are nominal and were used for sizing of the starters only. These values are **not** to be used for sizing heaters or other overload protection. Consult the motor nameplate for the correct motor current and refer this to the heater size chart for the particular starters used.

NOTE: When sizing overload heaters, conditions under which the starters will operate must be considered. Enclosed starters should have heaters one size larger than open starters. Where enclosures are subjected to external heat, such as radiant heat from the sun or heat accumulation under a roof, it may be necessary to increase the size even more. Experience with the operating conditions and measurement of the actual line current will aid in proper sizing of heaters.

Typical Motor Current and Starter Size

HP	THREE PHASE						SINGLE PHASE			
	230V		460V		575V		115V		230V	
	AMPS	STARTER	AMPS	STARTER	AMPS	STARTER	AMPS	STARTER	AMPS	STARTER
¼		00		00		00	5.8	00	2.9	00
⅓	1.7	00	0.9	00		00	7.2	00	3.6	00
½	2.0	00	1.0	00	0.8	00	9.8	0	4.9	00
¾	2.8	00	1.4	00	1.1	00	13.6	0	6.9	00
1	3.5	00	1.8	00	1.4	00	16.0	0	8.0	00
1½	5.0	00	2.5	00	2.0	00	20.0	1	10.0	0
2	6.5	0	3.3	00	2.6	00	24.0	1	12.0	0
3	9.0	0	4.5	0	4.0	0	34.0	1	17.0	1
5	15.0	1	7.5	0	6.0	0			28.0	1
7½	22.0	1	11.0	1	9.0	1			40.0	2
10	27.0	2	14.0	1	11.0	1			50.0	3
15	40.0	2	20.0	2	16.0	2				
20	52.0	3	26.0	2	21.0	2				
25	64.0	3	32.0	2	26.0	2				

For larger motor sizes, refer to National Electric Code.

BALDOR®
A MEMBER OF THE ABB GROUP

BALDOR® • RELIANCE

Product Information Packet

EL3503

.5HP,3450RPM,1PH,60HZ,56,3413LC,TEFC,F1

Copyright © All product information within this document is subject to Baldor Electric Company copyright © protection, unless otherwise noted.

Part Detail

Revision:	D	**Status:**	PRD/A	**Change #:**		**Proprietary:**	No
Type:	AC	**Prod. Type:**	3413LC	**Elec. Spec:**	34WGS431	**CD Diagram:**	
Enclosure:	TEFC	**Mfg Plant:**		**Mech. Spec:**	34L277	**Layout:**	
Frame:	56	**Mounting:**	F1	**Poles:**	02	**Created Date:**	11-10-2008
Base:	RG	**Rotation:**	R	**Insulation:**	B	**Eff. Date:**	03-20-2012
Leads:	6#18	**Literature:**		**Elec. Diagram:**		**Replaced By:**	

Nameplate NP2116L

CAT.NO.	EL3503						
SPEC.	34L277S431G1						
HP	.5						
VOLTS	115/230						
AMP	4.9/2.5						
RPM	3450						
FRAME	56	**HZ**	60	**PH**	1		
SER.F.	1.25	**CODE**	L	**DES**	N	**CL**	B
NEMA-NOM-EFF	68	**PF**	84				
RATING	40C AMB-CONT						
CC		**USABLE AT 208V**					
DE	6203	**ODE**	6203				
ENCL	TEFC	**SN**					
	SFA 5.8/2.9						

Parts List

Part Number	Description	Quantity
SA177298	SA 34L277S431G1	1.000 EA
RA165340	RA 34L277S431G1	1.000 EA
OC3025F11	CYL OIL CAP 25MFD/370V	1.000 EA
EC1400A03SP	ELEC CAP, 400-480 MFD, 125V, 1.81D X 3.	1.000 EA
NS2512A01	INSULATOR, CONDUIT BOX X	1.000 EA
34CB3002A	CB CAST W/.88 DIA HOLE	1.000 EA
34GS1029A01	GASKET, CONDUIT BOX	1.000 EA
51XB1016A07	10-16 X 7/16 HXWSSLD SERTYB	2.000 EA
11XW1032G06	10-32 X .38, TAPTITE II, HEX WSHR SLTD U	1.000 EA
51XW0832A07	8-32 X .44, TAPTITE II, HEX WSHR SLTD SE	3.000 EA
34EP3102A01SP	FR ENDPLATE, MACH	1.000 EA
34CB3801	CAPACITOR BOX, DIE CAST	1.000 EA
34GS3002	GASKET, CAPACITOR BOX	1.000 EA
51XB1214A08	12-14 X 1/2HX WS SL SR TYBX	2.000 EA
HW5100A03SP	WAVY WASHER (W1543-017)	1.000 EA
34EP3102A02SP	FR/PU ENDPLATE, MACH	1.000 EA
XY1032A02	10-32 HEX NUT DIRECTIONAL SERRATION	4.000 EA
34FN3002A01SP	EXTERNAL FAN, PLASTIC, .637/.639 HUB W/	1.000 EA
34FH4002A01SP	IEC FH NO GREASER	1.000 EA
51XW1032A06	10-32 X .38, TAPTITE II, HEX WSHR SLTD S	3.000 EA
34CB4517	CB LID 4 MTG HOLES .22 DIA STAMPED, FOR	1.000 EA
34GS1031A01	GASKET, FLAT CONDUIT BOX LID (LEXIDE)	1.000 EA
51XW0832A07	8-32 X .44, TAPTITE II, HEX WSHR SLTD SE	4.000 EA
HW2501D13SP	KEY, 3/16 SQ X 1.375	1.000 EA

Parts List (continued)

Part Number	Description	Quantity
HA7000A04	KEY RETAINER 0.625 DIA SHAFTS	1.000 EA
34GS5003A01	FOAM SLEEVE, ID = 2 1/16" X 4 3/8"	1.000 EA
10XF0440S02	04-40 X 1/8 TYPE F HEX HD STAINLESS STIC	2.000 EA
SP5056A18	MODEL 34 TYPE LC STATIONARY SWITCH WITH	1.000 EA
HA3100A44	THRUBOLT 10-32 X 8.000	4.000 EA
MG1000Y03	WILKO 689.710 GOLD PAINT SUPER E	0.014 GA
LB5040	INSTRUCTION TAG, AC & DC	1.000 EA
LB1125C02	SUPER-E (STOCK CTN LABEL SUPER-E WITH FL	1.000 EA
LC0001A01	CONN LABEL / WARNING LABEL (LC0001 / LB1	1.000 EA
NP2116L	ALUM SUPER-E UL CSA CC	1.000 EA
34PA1005	PACKING GROUP, BALDOR	1.000 EA

Performance Data at 115V, 60Hz, 0.5HP (Typical performance - Not guaranteed values)							
General Characteristics							
Full Load Torque:		0.748 LB-FT		**Start Configuration:**		DOL	
No-Load Current:		2.72 Amps		**Break-Down Torque:**		2.33 LB-FT	
Line-line Res. @ 25°C.:		1.06 Ohms A Ph / 4.65 Ohms B Ph		**Pull-Up Torque:**		1.95 LB-FT	
Temp. Rise @ Rated Load:		46 C		**Locked-Rotor Torque:**		2.14 LB-FT	
Temp. Rise @ S.F. Load:		53 C		**Starting Current:**		39.9 Amps	
Load Characteristics							
% of Rated Load	**25**	**50**	**75**	**100**	**125**	**150**	**S.F.**
Power Factor:	47.0	72.0	83.0	90.0	94.0	92.0	94.0
Efficiency:	59.0	66.6	72.5	73.4	72.5	70.8	72.5
Speed:	3551.0	3524.0	3494.0	3456.0	3413.0	3355.0	3413.0
Line Amperes:	2.97	3.39	4.02	4.85	5.8	7.13	5.8

Performance Graph at 115V, 60Hz, 0.5HP Typical performance - Not guaranteed values

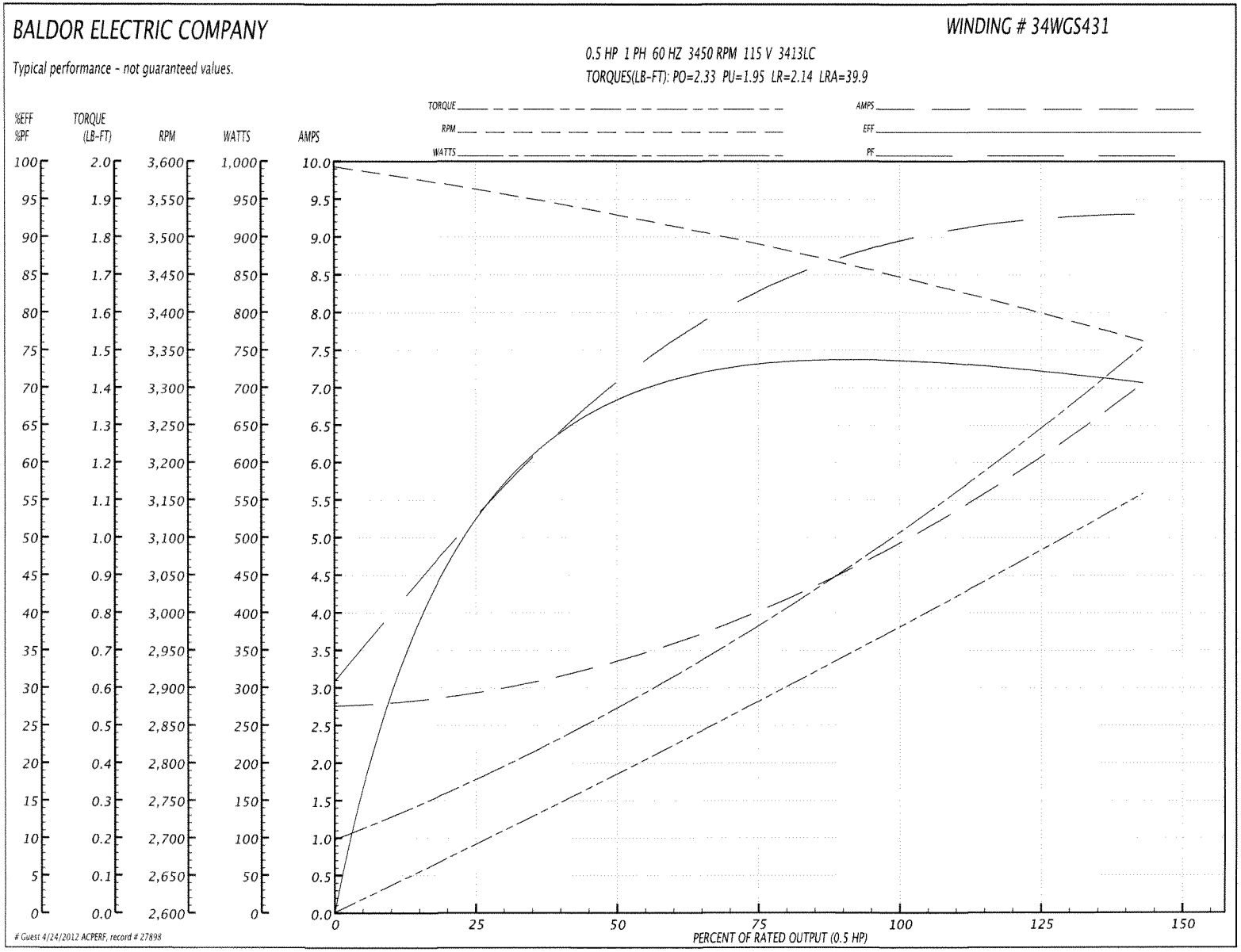

34LYL277

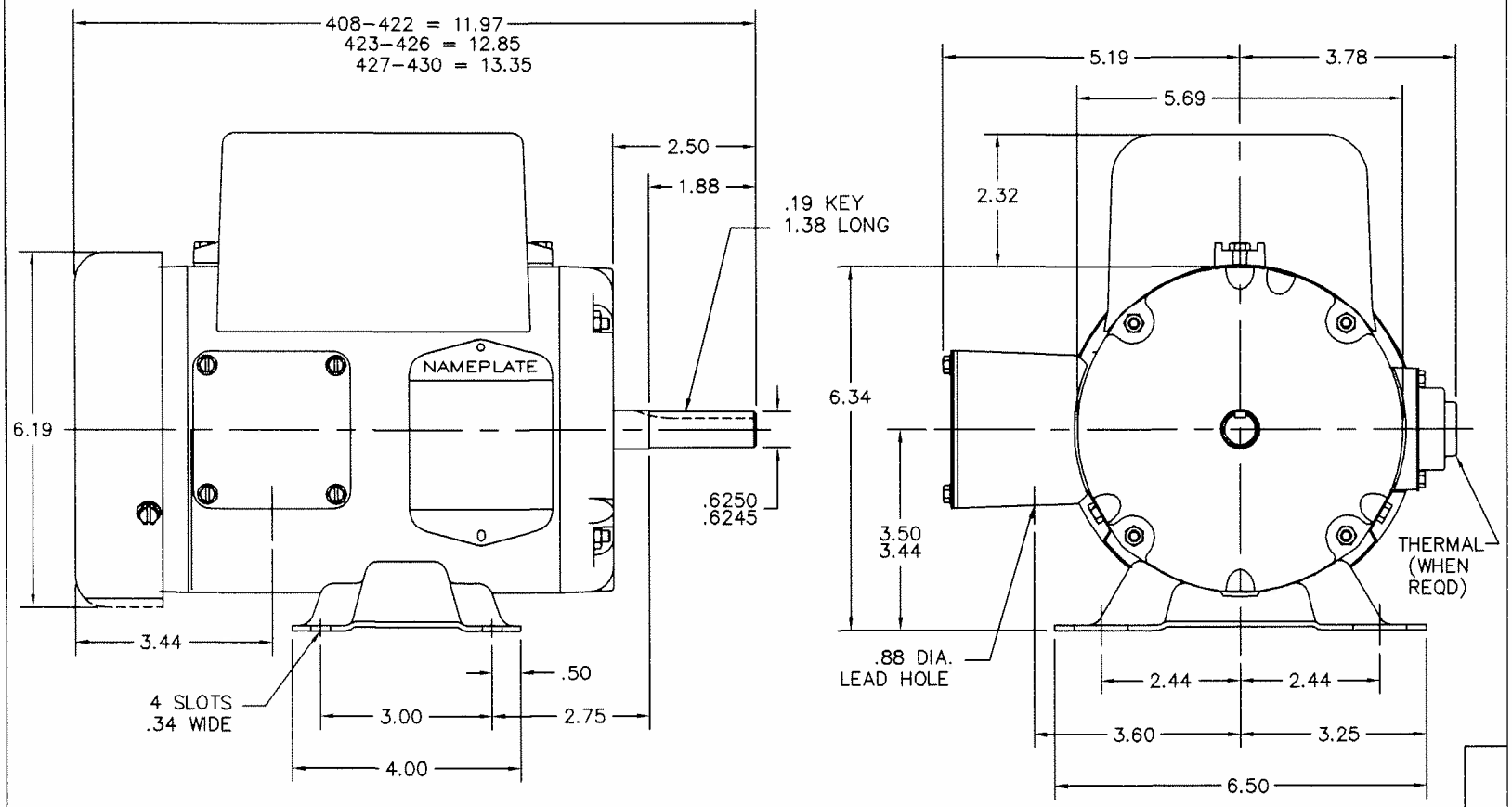

34LYL277

CUSTOMER IS RESPONSIBLE FOR DETERMINING THAT BALDOR'S PRODUCT WILL PERFORM SUITABLY IN THE INTENDED APPLICATION.

REV. DESC: UPDATE DESCRIPTION			BALDOR
REV. LTR: A	VERSION: 01	TDR: 000000725714	
FILE: \AAA\00160\129		REVISED: 02:45:28 12/15/2011	HOR 34LC NEMA 56 TEFC FOR 3 PH ER
MTL: –		BY: ENVINWO	SH 1 of 1

CD0055

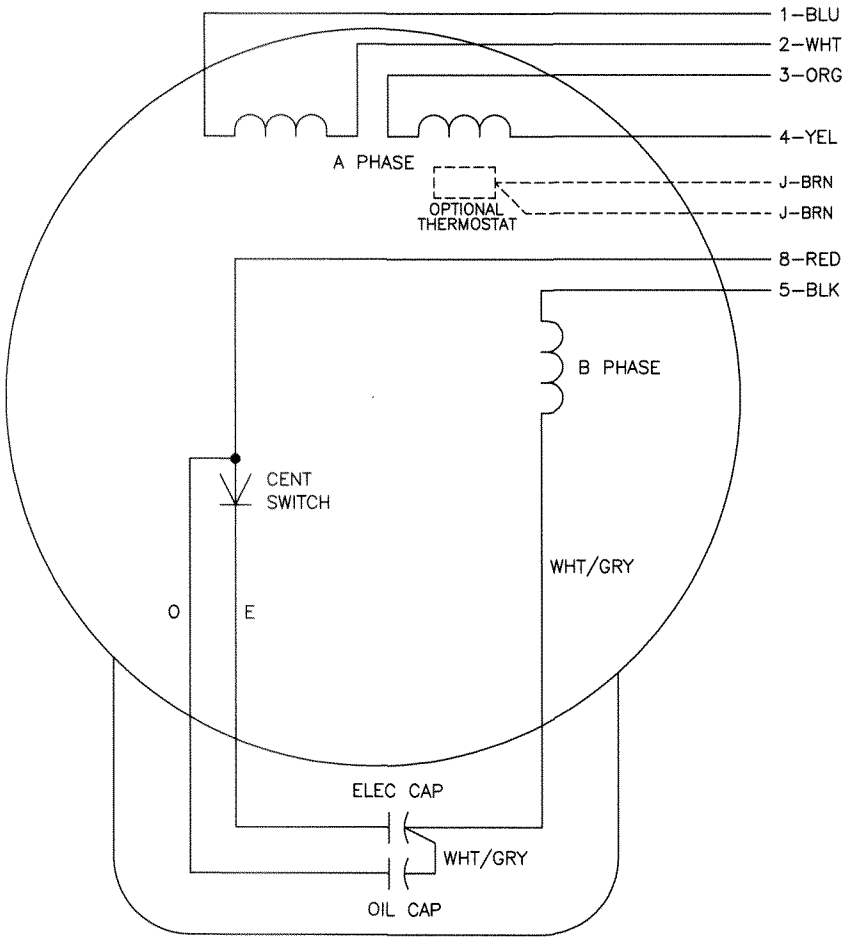

	LINE A	LINE B	JOIN
HIGH STD	1	4,5	2,3,8
HIGH OPP	1	4,8	2,3,5
LOW STD	1,3,8	2,4,5	–
LOW OPP	1,3,5	2,4,8	–

NOTES:

1. STANDARD ROTATION IS CCW FACING END OPPOSITE SHAFT EXTENSION.
2. OPTIONAL THERMOSTAT IS PROVIDED WHEN SPECIFIED.
3. MULTIPLE CAPACITORS ARE CONNECTED IN PARALLEL UNLESS OTHERWISE SPECIFIED.
4. LEAD COLORS ARE OPTIONAL. LEADS MUST ALWAYS BE NUMBERED AS SHOWN.

REV. DESC: REVISE TO SHOW OPTIONAL COLORS			
REV. LTR: D	BY: JLP	REVISED: 04/08/99 1:17	TDR: 0178636
CD0055		FILE: AAA00007414	MDL: –
		MTL: –	

BALDOR ELECTRIC Co.

TYPE LC, DV, REV, 6 LEADS

CD0055

BALDOR • RELIANCE

Integral Horsepower
AC Induction Motors

Installation & Operating Manual

2/09

MN400

Any trademarks used in this manual are the property of their respective owners.

Table of Contents

Section 1
General Information 1-1
Overview 1-1
Limited Warranty 1-1
Safety Notice 1-1
Receiving 1-2
Handling 1-2
Storage 1-3
Removal From Storage 1-4
Section 2
Installation & Operation 2-1
Overview 2-1
Location 2-1
Mounting 2-1
Alignment 2-1
Doweling & Bolting 2-2
Guarding 2-2
Power Connection 2-2
Conduit Box 2-2
AC Power 2-2
Rotation 2-3
First Time Start Up 2-4
Coupled Start Up 2-4
Jogging and Repeated Starts 2-4
Section 3
Maintenance & Troubleshooting 3-1
General Inspection 3-1
Relubrication & Bearings 3-1
Type of Grease 3-1
Relubrication Intervals 3-1
Relubrication Procedure 3-3
Troubleshooting Chart 3-4
Suggested bearing and winding RTD setting guidelines 3-5

Section 1
General Information

Overview This manual contains general procedures that apply to Baldor Motor products. Be sure to read and understand the Safety Notice statements in this manual. For your protection, do not install, operate or attempt to perform maintenance procedures until you understand the Warning and Caution statements. A Warning statement indicates a possible unsafe condition that can cause harm to personnel. A Caution statement indicates a condition that can cause damage to equipment.

Important: **This instruction manual is not intended to include a comprehensive listing of all details for all procedures required for installation, operation and maintenance. This manual describes general guidelines that apply to most of the motor products shipped by Baldor. If you have a question about a procedure or are uncertain about any detail, Do Not Proceed. Please contact your Baldor distributor for more information or clarification.**

Before you install, operate or perform maintenance, become familiar with the following:

- NEMA Publication MG-2, Safety Standard for Construction and guide for Selection, Installation and Use of Electric Motors and Generators.
- The National Electrical Code
- Local codes and Practices

Limited Warranty

www.baldor.com/support/warranty_standard.asp

Safety Notice: This equipment contains high voltage! Electrical shock can cause serious or fatal injury. Only qualified personnel should attempt installation, operation and maintenance of electrical equipment.

Be sure that you are completely familiar with NEMA publication MG-2, safety standards for construction and guide for selection, installation and use of electric motors and generators, the National Electrical Code and local codes and practices. Unsafe installation or use can cause conditions that lead to serious or fatal injury. Only qualified personnel should attempt the installation, operation and maintenance of this equipment.

WARNING: **Do not touch electrical connections before you first ensure that power has been disconnected. Electrical shock can cause serious or fatal injury. Only qualified personnel should attempt the installation, operation and maintenance of this equipment.**

WARNING: **Disconnect all electrical power from the motor windings and accessory devices before disassembly of the motor. Electrical shock can cause serious or fatal injury.**

WARNING: **Be sure the system is properly grounded before applying power. Do not apply AC power before you ensure that all grounding instructions have been followed. Electrical shock can cause serious or fatal injury. National Electrical Code and Local codes must be carefully followed.**

WARNING: **Avoid extended exposure to machinery with high noise levels. Be sure to wear ear protective devices to reduce harmful effects to your hearing.**

WARNING: **Surface temperatures of motor enclosures may reach temperatures which can cause discomfort or injury to personnel accidentally coming into contact with hot surfaces. When installing, protection should be provided by the user to protect against accidental contact with hot surfaces. Failure to observe this precaution could result in bodily injury.**

WARNING: **This equipment may be connected to other machinery that has rotating parts or parts that are driven by this equipment. Improper use can cause serious or fatal injury. Only qualified personnel should attempt to install operate or maintain this equipment.**

WARNING: **Do not by-pass or disable protective devices or safety guards. Safety features are designed to prevent damage to personnel or equipment. These devices can only provide protection if they remain operative.**

WARNING: **Avoid the use of automatic reset devices if the automatic restarting of equipment can be hazardous to personnel or equipment.**

WARNING: **Be sure the load is properly coupled to the motor shaft before applying power. The shaft key must be fully captive by the load device. Improper coupling can cause harm to personnel or equipment if the load decouples from the shaft during operation.**

WARNING: **Use proper care and procedures that are safe during handling, lifting, installing, operating and maintaining operations. Improper methods may cause muscle strain or other harm.**

WARNING: **Thermostat contacts automatically reset when the motor has slightly cooled down. To prevent injury or damage, the control circuit should be designed so that automatic starting of the motor is not possible when the thermostat resets.**

Safety Notice Continued

WARNING: **UL Listed motors must only be serviced by UL Approved Authorized Baldor Service Centers if these motors are to be returned to a hazardous and/or explosive atmosphere.**

WARNING: **Pacemaker danger – Magnetic and electromagnetic fields in the vicinity of current carrying carrying conductors and permanent magnet motors can result result in a serious health hazard to persons with cardiac pacemakers, metal implants, and hearing aids. To avoid risk, stay way from the area surrounding a permanent magnet motor.**

WARNING: **Before performing any motor maintenance procedure, be sure that the equipment connected to the motor shaft cannot cause shaft rotation. If the load can cause shaft rotation, disconnect the load from the motor shaft before maintenance is performed. Unexpected mechanical rotation of the motor parts can cause injury or motor damage.**

WARNING: **Use only UL/CSA listed explosion proof motors in the presence of flammable or combustible vapors or dust.**

WARNING: **Motors that are to be used in flammable and/or explosive atmospheres must display the UL label on the nameplate along with CSA listed logo. Specific service conditions for these motors are defined in NFPA 70 (NEC) Article 500.**

WARNING: **Guards must be installed for rotating parts such as couplings, pulleys, external fans, and unused shaft extensions, should be permanently guarded to prevent accidental contact by personnel. Accidental contact with body parts or clothing can cause serious or fatal injury.**

Caution: **To prevent premature equipment failure or damage, only qualified maintenance personnel should perform maintenance.**

Caution: **Do not over-lubricate motor as this may cause premature bearing failure.**

Caution: **Do not over tension belts. Excess tension may damage the motor or driven equipment.**

Caution: **Do not lift the motor and its driven load by the motor lifting hardware. The motor lifting hardware is adequate for lifting only the motor. Disconnect the load (gears, pumps, compressors, or other driven equipment) from the motor shaft before lifting the motor.**

Caution: **If eye bolts are used for lifting a motor, be sure they are securely tightened. The lifting direction should not exceed a 20° angle from the shank of the eye bolt or lifting lug. Excessive lifting angles can cause damage.**

Caution: **To prevent equipment damage, be sure that the electrical service is not capable of delivering more than the maximum motor rated amps listed on the rating plate.**

Caution: **If a HI POT test (High Potential Insulation test) must be performed, follow the precautions and procedure in NEMA MG1 and MG2 standards to avoid equipment damage.**

If you have any questions or are uncertain about any statement or procedure, or if you require additional information please contact your Baldor distributor or an Authorized Baldor Service Center.

Receiving

Each Baldor Electric Motor is thoroughly tested at the factory and carefully packaged for shipment. When you receive your motor, there are several things you should do immediately.

1. Observe the condition of the shipping container and report any damage immediately to the commercial carrier that delivered your motor.
2. Verify that the part number of the motor you received is the same as the part number listed on your purchase order.

Handling

The motor should be lifted using the lifting lugs or eye bolts provided.

Caution: **Do not lift the motor and its driven load by the motor lifting hardware. The motor lifting hardware is adequate for lifting only the motor. Disconnect the load (gears, pumps, compressors, or other driven equipment) from the motor shaft before lifting the motor.**

1. Use the lugs or eye bolts provided to lift the motor. Never attempt to lift the motor and additional equipment connected to the motor by this method. The lugs or eye bolts provided are designed to lift only the motor. Never lift the motor by the motor shaft or the hood of a WPII motor.
2. To avoid condensation inside the motor, do not unpack until the motor has reached room temperature. (Room temperature is the temperature of the room in which it will be installed).
   The packing provides insulation from temperature changes during transportation.
3. When lifting a WPII (Weather Proof Type 2) motor, do not lift the motor by inserting lifting lugs into holes on top of the cooling hood. These lugs are to be used for hood removal only.
   A spreader bar should be used to lift the motor by the cast lifting lugs located on the motor frame.

4. If the motor must be mounted to a plate with the driven equipment such as pump, compressor etc., it may not be possible to lift the motor alone. For this case, the assembly should be lifted by a sling around the mounting base. The entire assembly can be lifted as an assembly for installation.

   Do not lift the assembly using the motor lugs or eye bolts provided. Lugs or eye bolts are designed to lift motor only. If the load is unbalanced (as with couplings or additional attachments) additional slings or other means must be used to prevent tipping. In any event, the load must be secure before lifting. If the load is unbalanced (as with couplings or additional attachments) additional slings or other means must be used to prevent tipping. In any event, the load must be secure before lifting.

Storage

Storage requirements for motors and generators that will not be placed in service for at least six months from date of shipment.

Improper motor storage will result in seriously reduced reliability and failure. An electric motor that does not experience regular usage while being exposed to normally humid atmospheric conditions is likely to develop rust in the bearings or rust particles from surrounding surfaces may contaminate the bearings. The electrical insulation may absorb an excessive amount of moisture leading to the motor winding failure.

A wooden crate "shell" should be constructed to secure the motor during storage. This is similar to an export box but the sides & top must be secured to the wooden base with lag bolts (not nailed as export boxes are) to allow opening and reclosing many times without damage to the "shell".

Minimum resistance of motor winding insulation is 5 Meg ohms or the calculated minimum, which ever is greater. Minimum resistance is calculated as follows: **Rm = kV + 1**

where: (Rm is minimum resistance to ground in Meg–Ohms and kV is rated nameplate voltage defined as Kilo–Volts.)

Example: For a 480VAC rated motor Rm =1.48 meg–ohms (use 5 MΩ).
For a 4160VAC rated motor Rm = 5.16 meg–ohms.

Preparation for Storage

1. Some motors have a shipping brace attached to the shaft to prevent damage during transportation. The shipping brace, if provided, must be removed and stored for future use. The brace must be reinstalled to hold the shaft firmly in place against the bearing before the motor is moved.
2. Store in a clean, dry, protected warehouse where control is maintained as follows:
   a. Shock or vibration must not exceed 2 mils maximum at 60 hertz, to prevent the bearings from brinelling. If shock or vibration exceeds this limit vibration isolation pads must be used.
   b. Storage temperatures of 10°C (50°F) to 49°C (120°F) must be maintained.
   c. Relative humidity must not exceed 60%.
   d. Motor space heaters (when present) are to be connected and energized whenever there is a possibility that the storage ambient conditions will reach the dew point. Space heaters are optional.

   Note: Remove motor from containers when heaters are energized, reprotect if necessary.
3. Measure and record the resistance of the winding insulation (dielectric withstand) every 30 days of storage.
   a. If motor insulation resistance decreases below the minimum resistance, contact your Baldor District office.
   b. Place new desiccant inside the vapor bag and re–seal by taping it closed.
   c. If a zipper–closing type bag is used instead of the heat–sealed type bag, zip the bag closed instead of taping it. Be sure to place new desiccant inside bag after each monthly inspection.
   d. Place the shell over the motor and secure with lag bolts.
4. Where motors are mounted to machinery, the mounting must be such that the drains and breathers are fully operable and are at the lowest point of the motor. Vertical motors must be stored in the vertical position. Storage environment must be maintained as stated in step 2.

5. Motors with anti-friction bearings are to be greased at the time of going into extended storage with periodic service as follows:
   a. Motors marked "Do Not Lubricate" on the nameplate do not need to be greased before or during storage.
   b. Ball and roller bearing (anti-friction) motor shafts are to be rotated manually every 3 months and greased every 6 months in accordance with the Maintenance section of this manual.
   c. Sleeve bearing (oil lube) motors are drained of oil prior to shipment.
   The oil reservoirs must be refilled to the indicated level with the specified lubricant, (see Maintenance). The shaft should be rotated monthly by hand at least 10 to 15 revolutions to distribute oil to bearing surfaces.
   d. "Provisions for oil mist lubrication" – These motors are packed with grease. Storage procedures are the same as paragraph 5b.
   e. "Oil Mist Lubricated" – These bearings are protected for temporary storage by a corrosion inhibitor. If stored for greater than 3 months or outdoor storage is anticipated, connected to the oil mist system while in storage. If this is not possible, add the amount of grease indicated under "Standard Condition" in Section 3, then rotate the shaft 15 times by hand.
6. All breather drains are to be fully operable while in storage (drain plugs removed). The motors must be stored so that the drain is at the lowest point. All breathers and automatic "T" drains must be operable to allow breathing and draining at points other than through the bearings around the shaft. Vertical motors should be stored in a safe stable vertical position.
7. Coat all external machined surfaces with a rust preventing material.
   An acceptable product for this purpose is Exxon Rust Ban # 392.

Non-Regreaseable Motors

Non-regreasable motors with "Do Not Lubricate" on the nameplate should have the motor shaft rotated 15 times to redistribute the grease within the bearing every 3 months or more often.

All Other Motor Types

Before storage, the following procedure must be performed.

1. Remove the grease drain plug, if supplied, (opposite the grease fitting) on the bottom of each bracket prior to lubricating the motor.
2. The motor with regreasable bearing must be greased as instructed in Section 3 of this manual.
3. Replace the grease drain plug after greasing.
4. The motor shaft must be rotated a minimum of 15 times after greasing.
5. Motor Shafts are to be rotated at least 15 revolutions manually every 3 months and additional grease added every nine months (see Section 3) to each bearing.
6. Bearings are to be greased at the time of removal from storage.

Removal From Storage

1. Remove all packing material.
2. Measure and record the electrical resistance of the winding insulation resistance meter at the time of removal from storage. The insulation resistance must not be less than 50% from the initial reading recorded when the motor was placed into storage. A decrease in resistance indicates moisture in the windings and necessitates electrical or mechanical drying before the motor can be placed into service. If resistance is low, contact your Baldor District office.
3. Regrease the bearings as instructed in Section 3 of this manual.
4. Reinstall the original shipping brace if motor is to be moved. This will hold the shaft firmly against the bearing and prevent damage during movement.

Section 2
Installation & Operation

Overview

Installation should conform to the National Electrical Code as well as local codes and practices. When other devices are coupled to the motor shaft, be sure to install protective devices to prevent future accidents. Some protective devices include, coupling, belt guard, chain guard, shaft covers etc. These protect against accidental contact with moving parts. Machinery that is accessible to personnel should provide further protection in the form of guard rails, screening, warning signs etc.

Location

It is important that motors be installed in locations that are compatible with motor enclosure and ambient conditions. Improper selection of the motor enclosure and ambient conditions can lead to reduced operating life of the motor.

Proper ventilation for the motor must be provided. Obstructed airflow can lead to reduction of motor life.

1. **Open Drip-Proof/WPI** motors are intended for use indoors where atmosphere is relatively clean, dry, well ventilated and non-corrosive.
2. **Totally Enclosed and WPII** motors may be installed where dirt, moisture or dust are present and in outdoor locations.

Severe Duty, IEEE 841 and Washdown Duty enclosed motors are designed for installations with high corrosion or excessive moisture conditions. These motors should not be placed into an environment where there is the presence of flammable or combustible vapors, dust or any combustible material, unless specifically designed for this type of service.

Hazardous Locations are those where there is a risk of ignition or explosion due to the presence of combustible gases, vapors, dust, fibers, or flyings. Facilities requiring special equipment for hazardous locations are typically classified in accordance with local requirements. In the US market, guidance is provided by the National Electric Code.

Caution: **Do not lift the motor and its driven load by the motor lifting hardware. The motor lifting hardware is adequate for lifting only the motor. Disconnect the load (gears, pumps, compressors, or other driven equipment) from the motor shaft before lifting the motor.**

Mounting

The motor must be securely installed to a rigid foundation or mounting surface to minimize vibration and maintain alignment between the motor and shaft load. Failure to provide a proper mounting surface may cause vibration, misalignment and bearing damage.

Foundation caps and sole plates are designed to act as spacers for the equipment they support. If these devices are used, be sure that they are evenly supported by the foundation or mounting surface.

After installation is complete and accurate alignment of the motor and load is accomplished, the base should be grouted to the foundation to maintain this alignment.

The standard motor base is designed for horizontal or vertical mounting. Adjustable or sliding rails are designed for horizontal mounting only. Consult your Baldor distributor or authorized Baldor Service Center for further information.

Alignment

Accurate alignment of the motor with the driven equipment is extremely important. The pulley, sprocket, or gear used in the drive should be located on the shaft as close to the shaft shoulder as possible.
It is recommended to heat the pulley, sprocket, or gear before installing on the motor shaft.
Forcibly driving a unit on the motor shaft will damage the bearings.

1. **Direct Coupling**
   For direct drive, use flexible couplings if possible. Consult the drive or equipment manufacturer for more information. Mechanical vibration and roughness during operation may indicate poor alignment. Use dial indicators to check alignment. The space between coupling hubs should be maintained as recommended by the coupling manufacturer.
2. **End-Play Adjustment**
   The axial position of the motor frame with respect to its load is also extremely important. The motor bearings are not designed for excessive external axial thrust loads. Improper adjustment will cause failure.
3. **Pulley Ratio**
   The pulley ratio should not exceed 8:1.

Caution: **Do not over tension belts. Excess tension may damage the motor or driven equipment.**

4. **Belt Drive**
   Align sheaves carefully to minimize belt wear and axial bearing loads (see End-Play Adjustment). Belt tension should be sufficient to prevent belt slippage at rated speed and load. However, belt slippage may occur during starting.
5. Sleeve bearing motors are only suitable for coupled loads.

Doweling & Bolting After proper alignment is verified, dowel pins should be inserted through the motor feet into the foundation. This will maintain the correct motor position should motor removal be required. (Baldor motors are designed for doweling.)

1. Drill dowel holes in diagonally opposite motor feet in the locations provided.
2. Drill corresponding holes in the foundation.
3. Ream all holes.
4. Install proper fitting dowels.
5. Mounting bolts must be carefully tightened to prevent changes in alignment. Use a flat washer and lock washer under each nut or bolt head to hold the motor feet secure. Flanged nuts or bolts may be used as an alternative to washers.

WARNING: **Guards must be installed for rotating parts such as couplings, pulleys, external fans, and unused shaft extensions, should be permanently guarded to prevent accidental contact by personnel. Accidental contact with body parts or clothing can cause serious or fatal injury.**

Guarding Guards must be installed for rotating parts such as couplings, pulleys, external fans, and unused shaft extensions. This is particularly important where the parts have surface irregularities such as keys, key ways or set screws. Some satisfactory methods of guarding are:

1. Covering the machine and associated rotating parts with structural or decorative parts of the driven equipment.
2. Providing covers for the rotating parts. Covers should be sufficiently rigid to maintain adequate guarding during normal service.

Power Connection Motor and control wiring, overload protection, disconnects, accessories and grounding should conform to the National Electrical Code and local codes and practices. Flying leads must be insulated with two full wraps of electrical grade insulating tape or heat shrink tubing.

Conduit Box For ease of making connections, an oversize conduit box is provided.
The box can be rotated 360° in 90° increments.
Auxiliary conduit boxes are provided on some motors for accessories such as space heaters, RTD's etc.

AC Power Connect the motor leads as shown on the connection diagram located on the name plate or inside the cover on the conduit box. Be sure the following guidelines are met:

1. AC power is within ±10% of rated voltage with rated frequency. (See motor name plate for ratings).
   OR
2. AC power is within ±5% of rated frequency with rated voltage.
   OR
3. A combined variation in voltage and frequency of ±10% (sum of absolute values) of rated values, provided the frequency variation does not exceed ±5% of rated frequency.

Performance within these voltage and frequency variations are shown in Figure 2-2.

Figure 2-1 Accessory Connections

HEATERS H1 —∿∿— H2 H1 —∿∿— H2	One heater is installed in each end of motor. Leads for each heater are labeled H1 & H2. (Like numbers should be tied together).
THERMISTORS T1 — T2	Three thermistors are installed in windings and tied in series. Leads are labeled T1 & T2.
WINDING RTDS RED RED WHITE	Winding RTDs are installed in windings (2) per phase. Each set of leads is labeled W1, W2, W3, W4, W5, & W6.
BEARING RTD RED RED WHITE	* One bearing RTD is installed in Drive endplate (PUEP), leads are labeled RTDDE. * One bearing RTD is installed in Opposite Drive endplate (FREP), leads are labeled RTDODE. * Note RTD may have 2–Red/1–White leads; or 2–White/1–Red Lead.

Figure 2-2 Typical Motor Performance VS Voltage Variations

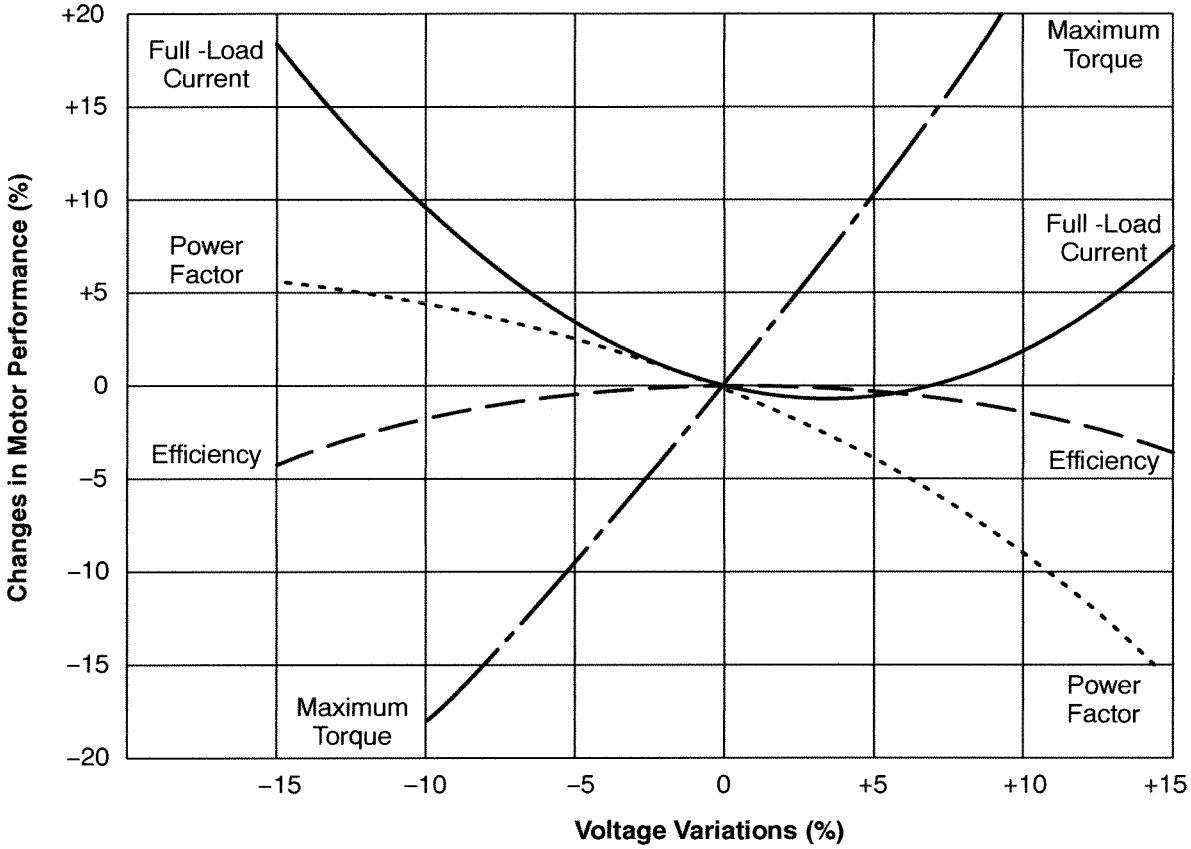

Rotation All three phase motors are reversible. To reverse the direction of rotation, disconnect and lock out power and interchange any two of the three line leads for three phase motors. For single phase motors, check the connection diagram to determine if the motor is reversible and follow the connection instructions for lead numbers to be interchanged. Not all single phase motors are reversible.

Adjustable Frequency Power Inverters used to supply adjustable frequency power to induction motors produce wave forms with lower order harmonics with voltage spikes superimposed. Turn–to–turn, phase–to–phase, and ground insulation of stator windings are subject to the resulting dielectric stresses. Suitable precautions should be taken in the design of these drive systems to minimize the magnitude of these voltage spikes. Consult the drive instructions for maximum acceptable motor lead lengths, and proper grounding.

First Time Start Up Be sure that all power to motor and accessories is off. Be sure the motor shaft is disconnected from the load and will not cause mechanical rotation of the motor shaft.

1. Make sure that the mechanical installation is secure. All bolts and nuts are tightened etc.
2. If motor has been in storage or idle for some time, check winding insulation integrity.
3. Inspect all electrical connections for proper termination, clearance, mechanical strength and electrical continuity.
4. Be sure all shipping materials and braces (if used) are removed from motor shaft.
5. Manually rotate the motor shaft to ensure that it rotates freely.
6. Replace all panels and covers that were removed during installation.
7. Momentarily apply power and check the direction of rotation of the motor shaft.
8. If motor rotation is wrong, be sure power is off and change the motor lead connections. Verify rotation direction before you continue.
9. Start the motor and ensure operation is smooth without excessive vibration or noise. If so, run the motor for 1 hour with no load connected.
10. After 1 hour of operation, disconnect power and connect the load to the motor shaft. Verify all coupling guards and protective devices are installed. Ensure motor is properly ventilated.

Coupled Start Up This procedure assumes a coupled start up. Also, that the first time start up procedure was successful.

1. Check the coupling and ensure that all guards and protective devices are installed.
2. Check that the coupling is properly aligned and not binding.
3. The first coupled start up should be with no load. Apply power and verify that the load is not transmitting excessive vibration back to the motor though the coupling or the foundation. Vibration should be at an acceptable level.
4. Run for approximately 1 hour with the driven equipment in an unloaded condition.

The equipment can now be loaded and operated within specified limits. Do not exceed the name plate ratings for amperes for steady continuous loads.

Jogging and Repeated Starts Repeated starts and/or jogs of induction motors generally reduce the life of the motor winding insulation. A much greater amount of heat is produced by each acceleration or jog than by the same motor under full load. If it is necessary to repeatedly start or jog the motor, it is advisable to check the application with your local Baldor distributor or Baldor Service Center.

Heating - Duty rating and maximum ambient temperature are stated on the motor name plate. Do not exceed these values. If there is any question regarding safe operation, contact your local Baldor District Office or Baldor Service Center.

Section 3
Maintenance & Troubleshooting

WARNING: UL Listed motors must only be serviced by UL Approved Authorized Baldor Service Centers if these motors are to be returned to a hazardous and/or explosive atmosphere.

General Inspection Inspect the motor at regular intervals, approximately every 500 hours of operation or every 3 months, whichever occurs first. Keep the motor clean and the ventilation openings clear. The following steps should be performed at each inspection:

WARNING: Do not touch electrical connections before you first ensure that power has been disconnected. Electrical shock can cause serious or fatal injury. Only qualified personnel should attempt the installation, operation and maintenance of this equipment.

1. Check that the motor is clean. Check that the interior and exterior of the motor is free of dirt, oil, grease, water, etc. Oily vapor, paper pulp, textile lint, etc. can accumulate and block motor ventilation. If the motor is not properly ventilated, overheating can occur and cause early motor failure.
2. Use a "Megger" periodically to ensure that the integrity of the winding insulation has been maintained. Record the Megger readings. Immediately investigate any significant drop in insulation resistance.
3. Check all electrical connectors to be sure that they are tight.

Relubrication & Bearings Bearing grease will lose its lubricating ability over time, not suddenly. The lubricating ability of a grease (over time) depends primarily on the type of grease, the size of the bearing, the speed at which the bearing operates and the severity of the operating conditions. Good results can be obtained if the following recommendations are used in your maintenance program.

Type of Grease A high grade ball or roller bearing grease should be used. Recommended grease for standard service conditions is **Polyrex EM (Mobil)**. Do not mix greases unless compatibility has been checked and verified.

Equivalent and compatible greases include:
Texaco Polystar, Rykon Premium #2, Pennzoil Pen 2 Lube and Chevron SRI.

Relubrication Intervals Recommended relubrication intervals are shown in Table 3-1. It is important to realize that the recommended intervals of Table 3-1 are based on average use.

Refer to additional information contained in Tables 3-2, 3-3 and 3-4.

Table 3-1 Relubrication Intervals *

NEMA / (IEC) Frame Size	Rated Speed - RPM					
	10000	6000	3600	1800	1200	900
Up to 210 incl. (132)	**	2700 Hrs.	5500 Hrs.	12000 Hrs.	18000 Hrs.	22000 Hrs.
Over 210 to 280 incl. (180)		**	3600 Hrs.	9500 Hrs.	15000 Hrs.	18000 Hrs.
Over 280 to 360 incl. (225)		**	* 2200 Hrs.	7400 Hrs.	12000 Hrs.	15000 Hrs.
Over 360 to 5800 incl. (300)		**	*2200 Hrs.	3500 Hrs.	7400 Hrs.	10500 Hrs.

* Relubrication intervals are for ball bearings.
For vertically mounted motors and roller bearings, divide the relubrication interval by 2.

** For motors operating at speeds greater than 3600 RPM, contact Baldor for relubrication recommendations.

Table 3-2 Service Conditions

Severity of Service	Hours per day of Operation	Ambient Temperature Maximum	Atmospheric Contamination
Standard	8	40° C	Clean, Little Corrosion
Severe	16 Plus	50° C	Moderate dirt, Corrosion
Extreme	16 Plus	>50° C* or Class H Insulation	Severe dirt, Abrasive dust, Corrosion, Heavy Shock or Vibration
Low Temperature		<–29° C **	

* Special high temperature grease is recommended (Dow Corning DC44). Note that Dow Corning DC44 grease does not mix with other grease types. Thoroughly clean bearing & cavity before adding grease.

** Special low temperature grease is recommended (Aeroshell 7).

Table 3-3 Relubrication Interval Multiplier

Severity of Service	Multiplier
Standard	1.0
Severe	0.5
Extreme	0.1
Low Temperature	1.0

Some motor designs use different bearings on each motor end. This is normally indicated on the motor nameplate. In this case, the larger bearing is installed on the motor Drive endplate. For best relubrication results, only use the appropriate amount of grease for each bearing size (not the same for both).

Table 3-4 Bearings Sizes and Types

Frame Size NEMA (IEC)	Bearing Description (These are the "Large" bearings (Shaft End) in each frame size)			
	Bearing	Weight of Grease to add * oz (Grams)	Volume of grease to be added	
			in^3	teaspoon
56 to 140 (90)	6203	0.08 (2.4)	0.15	0.5
140 (90)	6205	0.15 (3.9)	0.2	0.8
180 (100–112)	6206	0.19 (5.0)	0.3	1.0
210 (132)	6307	0.30 (8.4)	0.6	2.0
250 (160)	6309	0.47 (12.5)	0.7	2.5
280 (180)	6311	0.61 (17)	1.2	3.9
320 (200)	6312	0.76 (20.1)	1.2	4.0
360 (225)	6313	0.81 (23)	1.5	5.2
400 (250)	6316	1.25 (33)	2.0	6.6
440 (280)	6319	2.12 (60)	4.1	13.4
5000 to 5800 (315–450)	6328	4.70 (130)	9.2	30.0
5000 to 5800 (315–450)	NU328	4.70 (130)	9.2	30.0
360 to 449 (225–280)	NU319	2.12 (60)	4.1	13.4
AC Induction Servo				
76 Frame 180 (112)	6207	0.22 (6.1)	0.44	1.4
77 Frame 210 (132)	6210	0.32 (9.0)	0.64	2.1
80 Frame 250(160)	6213	0.49 (14.0)	0.99	3.3

* Weight in grams = .005 DB of grease to be added

Note: Not all bearing sizes are listed. For intermediate bearing sizes, use the grease volume for the next larger size bearing.

Caution: **To avoid damage to motor bearings, grease must be kept free of dirt. For an extremely dirty environment, contact your Baldor distributor or an authorized Baldor Service Center for additional information.**

Relubrication Procedure Be sure that the grease you are adding to the motor is compatible with the grease already in the motor. Consult your Baldor distributor or an authorized service center if a grease other than the recommended type is to be used.

Caution: **Do not over-lubricate motor as this may cause premature bearing failure.**

With Grease Outlet Plug

1. With the motor stopped, clean all grease fittings with a clean cloth.
2. Remove grease outlet plug.

Caution: **Over-lubricating can cause excessive bearing temperatures, premature lubrication breakdown and bearing failure.**

3. Add the recommended amount of grease.
4. Operate the motor for 15 minutes with grease plug removed. This allows excess grease to purge.
5. Re-install grease outlet plug.

Without Grease Provisions

Note: Only a Baldor authorized and UL or CSA certified service center can disassemble a UL/CSA listed explosion proof motor to maintain it's UL/CSA listing.

1. Disassemble the motor.
2. Add recommended amount of grease to bearing and bearing cavity. (Bearing should be about 1/3 full of grease and outboard bearing cavity should be about 1/2 full of grease.)
3. Assemble the motor.

Sample Relubrication Determination

Assume - NEMA 286T (IEC 180), 1750 RPM motor driving an exhaust fan in an ambient temperature of 43° C and the atmosphere is moderately corrosive.

1. Table 3-1 list 9500 hours for standard conditions.
2. Table 3-2 classifies severity of service as "Severe".
3. Table 3-4 shows that 1.2 in^3 or 3.9 teaspoon of grease is to be added.

Note: Smaller bearings in size category may require reduced amounts of grease.

Table 3-5 Troubleshooting Chart

Symptom	Possible Causes	Possible Solutions
Motor will not start	Usually caused by line trouble, such as, single phasing at the starter.	Check source of power. Check overloads, fuses, controls, etc.
Excessive humming	High Voltage.	Check input line connections.
	Eccentric air gap.	Have motor serviced at local Baldor service center.
Motor Over Heating	Overload. Compare actual amps (measured) with nameplate rating.	Locate and remove source of excessive friction in motor or load. Reduce load or replace with motor of greater capacity.
	Single Phasing.	Check current at all phases (should be approximately equal) to isolate and correct the problem.
	Improper ventilation.	Check external cooling fan to be sure air is moving properly across cooling fins. Excessive dirt build-up on motor. Clean motor.
	Unbalanced voltage.	Check voltage at all phases (should be approximately equal) to isolate and correct the problem.
	Rotor rubbing on stator.	Check air gap clearance and bearings.
		Tighten "Thru Bolts".
	Over voltage or under voltage.	Check input voltage at each phase to motor.
	Open stator winding.	Check stator resistance at all three phases for balance.
	Grounded winding.	Perform dielectric test and repair as required.
	Improper connections.	Inspect all electrical connections for proper termination, clearance, mechanical strength and electrical continuity. Refer to motor lead connection diagram.
Bearing Over Heating	Misalignment.	Check and align motor and driven equipment.
	Excessive belt tension.	Reduce belt tension to proper point for load.
	Excessive end thrust.	Reduce the end thrust from driven machine.
	Excessive grease in bearing.	Remove grease until cavity is approximately $^3/_4$ filled.
	Insufficient grease in bearing.	Add grease until cavity is approximately $^3/_4$ filled.
	Dirt in bearing.	Clean bearing cavity and bearing. Repack with correct grease until cavity is approximately $^3/_4$ filled.
Vibration	Misalignment.	Check and align motor and driven equipment.
	Rubbing between rotating parts and stationary parts.	Isolate and eliminate cause of rubbing.
	Rotor out of balance.	Have rotor balance checked are repaired at your Baldor Service Center.
	Resonance.	Tune system or contact your Baldor Service Center for assistance.
Noise	Foreign material in air gap or ventilation openings.	Remove rotor and foreign material. Reinstall rotor. Check insulation integrity. Clean ventilation openings.
Growling or whining	Bad bearing.	Replace bearing. Clean all grease from cavity and new bearing. Repack with correct grease until cavity is approximately $^3/_4$ filled.

Suggested bearing and winding RTD setting guidelines

Most large frame AC Baldor motors with a 1.15 service factor are designed to operate below a Class B (80°C) temperature rise at rated load and are built with a Class H winding insulation system. Based on this low temperature rise, RTD (Resistance Temperature Detectors) settings for Class B rise should be used as a starting point. Some motors with 1.0 service factor have Class F temperature rise.

The following tables show the suggested alarm and trip settings for RTDs. Proper bearing and winding RTD alarm and trip settings should be selected based on these tables unless otherwise specified for specific applications.

If the driven load is found to operate well below the initial temperature settings under normal conditions, the alarm and trip settings may be reduced so that an abnormal machine load will be identified.

The temperature limits are based on the installation of the winding RTDs imbedded in the winding as specified by NEMA. Bearing RTDs should be installed so they are in contact with the outer race on ball or roller bearings or in direct contact with the sleeve bearing shell.

Winding RTDs – Temperature Limit In °C (40°C Maximum Ambient)

Motor Load	Class B Temp Rise ≤ 80°C (Typical Design)		Class F Temp Rise ≤ 105°C		Class H Temp Rise ≤ 125°C	
	Alarm	Trip	Alarm	Trip	Alarm	Trip
≤ Rated Load	130	140	155	165	175	185
Rated Load to 1.15 S.F.	140	150	160	165	180	185

Note: • Winding RTDs are factory production installed, not from Mod–Express.
• When Class H temperatures are used, consider bearing temperatures and relubrication requirements.

Bearing RTDs – Temperature Limit In °C (40°C Maximum Ambient)

Bearing Type Oil or Grease	Anti–Friction		Sleeve	
	Alarm	Trip	Alarm	Trip
Standard*	95	100	85	95
High Temperature**	110	115	105	110

Note: * Bearing temperature limits are for standard design motors operating at Class B temperature rise.
** High temperature lubricants include some special synthetic oils and greases.

Greases that may be substituted that are compatible with Polyrex EM (but considered as "standard" lubricants) include the following:

- Texaco Polystar
- Mobilith SHC–100
- Darmex 707
- Rykon Premium #2
- Pennzoil Pennzlube EM–2
- Darmex 711
- Chevron SRI #2
- Chevron Black Pearl
- Petro–Canada Peerless LLG

See the motor nameplate for replacement grease or oil recommendation.
Contact Baldor application engineering for special lubricants or further clarifications.

6050 PEACHTREE PKWY, SUITE 240-187 ATLANTA, GA 30092
Ph: 678-935-1431, Fax: 678-935-0648

D. Assembly Steps

6050 PEACHTREE PKWY, SUITE 240-187 ATLANTA, GA 30092
Ph: 678-935-1431, Fax: 678-935-0648

There are 3 simple assembly steps that must be performed by the user:

1. **Mist and Grease Eliminator (MGE) Assembly**
2. **loading of chemical media into the unit**
3. **installation of the Real Time Media Rod**

1. MGE Assembly

The MGE assembly has a 4" pipe protruding from one of its two 4" PVC hubs (a 4" hub = an opening into which a 4" PVC pipe will fit snugly). It is that 4" pipe that connects to the existing pipework, via the included FERNCO flexible coupling. The other end of the Mist and Grease Eliminator slides directly on to the short 4" PVC pipe section which protrudes from the DS-100.

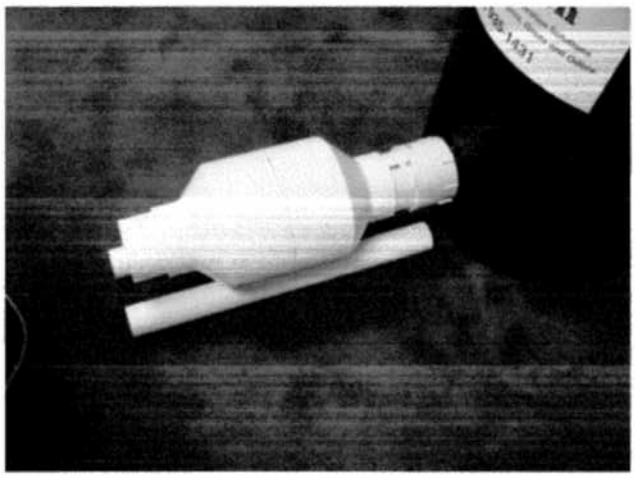

NOTE: The impingement pad contained inside the MGE consists of three pads are knitted together to form one single pad (see image below). The pad consists of a section of 3BA crimped stainless steel wire mesh, followed by a 2nd section of 6BE co-knit mesh with fiberglass yarn, and a final section of 3BA crimped wire mesh. (The 3BA wire mesh is tighter/higher- density than the mesh shown in the illustration). The 3BA wire mesh is made from 0.006 inch diameter stainless steel, with a density of 12 lbs/FT_3, and a pad surface area of 200 FT_2/FT_3. The 6BE co-knit mesh has a pad surface area in excess of 3648 FT_2/FT_3.

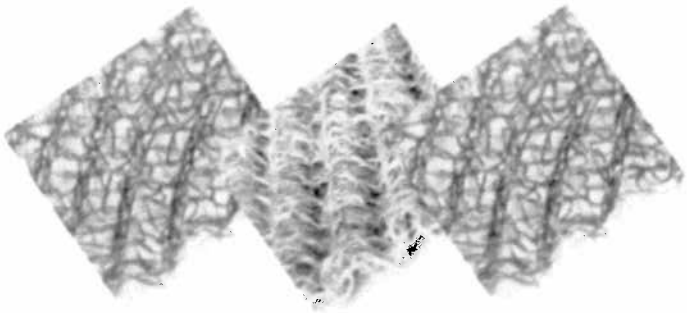

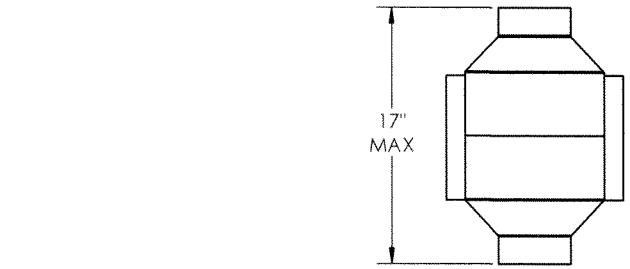

TOP VIEW

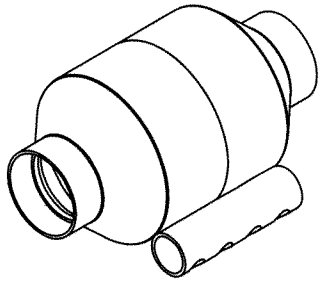

ISOMETRIC VIEW
SCALE 1:6

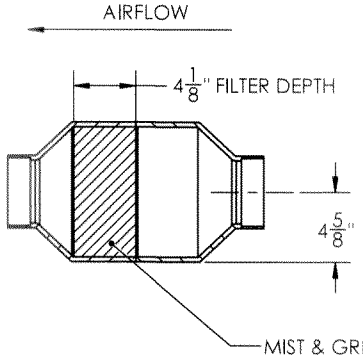

SECTION A-A

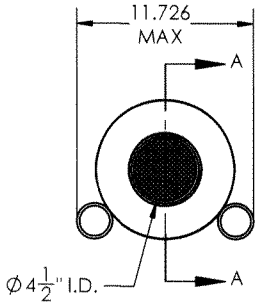

FRONT VIEW

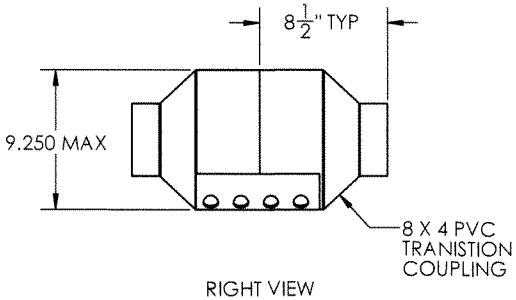

RIGHT VIEW

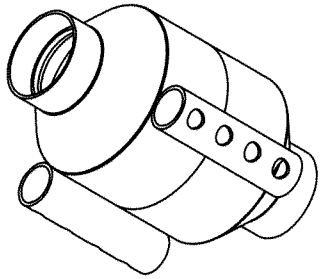

FRONT-RIGHT-BOTTOM
AUX PROJECTED VIEW
SCALE 1:6

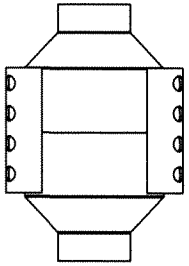

BOTTOM VIEW

NOTES:

1. HOUSING CONSTRUCTION: PVC SCH 40 FITTINGS
2. ELEMENT CONSTRUCTION: 316SS MESH (MULTI-FOLD)
3. FILTER SERVICE - BACKFLUSH ONLY (OPPOSITE DIRECTIION OF AIRFLOW)(NOT FOR DIS-ASSEMBLY)
4. DESIGN FOR 160 CFM MAX @ 400 FPM VELOCITY
5. PRESSURE RESISTANCE ~ 2 IN W.G. + MAX CONTAMINATED

FACE VELOCITY CALCULATION

FV = CFM/SQUARE AREA
FV = 100 CFM/.4 SQ FT
FV = 250 FPM

PROPRIETARY AND CONFIDENTIAL
THE INFORMATION CONTAINED IN THIS DRAWING IS THE SOLE PROPERTY OF PUREAIR FILTRATION. ANY REPRODUCTION IN PART OR AS A WHOLE WITHOUT THE WRITTEN PERMISSION OF PUREAIR FILTRATION IS PROHIBITED.

NEXT ASSY	USED ON
APPLICATION	

UNLESS OTHERWISE SPECIFIED:
DIMENSIONS ARE IN INCHES
TOLERANCES:
FRACTIONAL ± 1/64
ANG: MACH ± 1/2° BEND ± 1/2°
TWO PLACE DECIMAL ±.010
THREE PLACE DECIMAL ±.005
INTERPRET GEOMETRIC TOLERANCING PER:
MATERIAL
FINISH
DO NOT SCALE DRAWING

	NAME	DATE
DRAWN	JDS	12-07-11
CHECKED		
ENG APPR.		
MFG APPR.		
Q.A.		

COMMENTS:

PureAir Filtration

TITLE:
M & G Assembly, DS-100

SIZE	DWG. NO.	REV
B	M & G Assembly, DS-100 Bullet	1
SCALE: 1:8	WEIGHT:	SHEET 1 OF 1

6050 PEACHTREE PKWY, SUITE 240-187 ATLANTA, GA 30092
Ph: 678-935-1431, Fax: 678-935-0648

2. Loading chemical media into the unit

The DS100 uses a combination of Sulphasorb XL and CPS Blend media. Pour in the 3 cubic feet of Sulphasorb XL first (so that it will be on the bottom and will make first contact with air that enters the DS100).

Pour in the 2 cubic feet of CPS Blend second (so that it will be on top, and will make contact with the air only after the air has already passed through the layer of Sulphasorb XL).

3. Real Time Media Rod installation

IMPORTANT: In order to protect the silver-coated Real Time Media Rods from premature corrosion, Pure Air Filtration does not ship this component until just before unit installation. Please contact Pure Air Filtration approx. 10 days before installation, and we will ship the Real Time Media Rod at that point.

To install the rod, first make sure that the hex bolt on the handle has been tightened sufficiently enough to hold the silver-coated rod firmly in place. Then, slide the rod through the hole in the angled-upward circular steel port located on the side of the unit (for port location, see drawing, Section A of this document). Screw clockwise to tighten. Install ONLY AFTER media has already been loaded, as reversing this order may bend and damage the rod.

Occasional visual inspection of the corrosion point of this rod can eliminate the need to periodically take media samples from the two media sample ports (see drawing) and send them in for analysis.

PureAir Filtration
6050 PEACHTREE PKWY, SUITE 240-187 ATLANTA, GA 30092
Ph: 678-935-1431, Fax: 678-935-0648

E. Chemical Media Information

PureAir Filtration

Sulphasorb XL
H2S Adsorbent

Description:
Sulphasorb XL was developed to provide our customers with the highest extended life. Sulphasorb XL has a capacity for capturing Hydrogen Sulfide (H_2S) which is **two to three times higher than other products** in the market. Pure Air does not impregnate this carbon.

Sulphasorb XL performs exceptionally well not only in PureAir scrubbers, but also as replacement media in scrubbers manufactured by other companies.

Specifications: Sulphasorb XL is available in two formulations

Sulphasorb XLx—
General Description: Porous, cylindrical pellets of high grade bituminous activated carbon.
Properties:

- **H_2S Removal Capacity** (by volume): **0.30 g/cc min**
- Removal Capacity (by weight): H_2S: 50% min
- CTC value: 70% min
- Surface Area: 1050 m^2/g min
- Typical Apparent Density: .44 g/cc (28 lbs/ft^3)
- Moisture Content: 15% max
- Hardness: 95 min
- Ignition Temperature: >400 C
- Iodine No.: 1050 mg/g min
- Butane Activity, (weight%): 26% min
- Mean Particle Diameter: 4 mm (typical)

~~**Sulphasorb XLg—**~~
~~General Description: Porous, granular 4x8 mesh activated carbon.~~
~~Properties:~~

- ~~**H_2S Removal Capacity** (by volume): **0.30 g/cc min**~~
- ~~Removal Capacity (by weight): H_2S: 50% min~~
- ~~Surface Area: 1050 m^2/g min~~
- ~~Typical Apparent Density: .41 g/cc (26 lbs/ft^3)~~
- ~~Moisture Content: 8% max~~
- ~~Ignition Temperature: >400 C~~

Life Testing: Both versions of Suphasorb XL work with PureAir's exclusive Media Bed Monitor.

Pure Air Filtration, LLC
6050 Peachtree Pkwy Suite 240-187
Atlanta, GA 30092 USA
+1 (678) 935-1431 toll free 1-866-543-7479
Fax +1 (678) 935-0648

Visit us at: www.PureAirFiltration.com or
write us at: info@PureAirFiltration.com

PureAir Filtration

6050 Peachtree Pkwy
Suite 240-187
Atlanta, GA 30092
678-935-1431

Material Safety Data Sheet

Product Name: Sulphasorb XL

Revision Date: February 20, 2007

Section I - General Information

Manufacturer/Supplier: Pure Air Filtration, LLC
Chemical Name and Synonyms: Activated Carbon
Formula: C
Chemical Family: Activated carbon
CAS Number: 7740-44-0 DOT Proper Shipping Name: NMFC 40560 Activated Carbon, Purifying

Section II - Hazard Specifications

Known Hazards Under 20 CFR 1910 1200

	Yes	No		Yes	No
Combustible Liquid		X	Skin Hazard		X
Flammable Material		X	Eye Hazard		X
Pyrophoric Material		X	Toxic Agent		X
Explosive Material		X	Highly Toxic Agent		X
Unstable Material		X	Sensitizer		X
Water Reactive Material		X	Carcinogen		X
Oxidizer		X	Reproductive Toxin		X
Organic Peroxide		X	Blood Toxin		X
Corrosive Material		X	Nervous System Toxin		X
Compressed Gas		X	Lung Toxin		X
Irritant	X		Liver Toxin		X
			Kidney Toxin		X

TLV: N/A DOT hazard Class: N/A EPA Hazard Waste Class: N/A
PEL: N/A NEPA Hazard Signal: N/A

Safety Ratings (Provided here for your convenience)

Health Rating: 1 - Slight
Flammability Rating: 1 - Slight
Reactivity Rating: 1 - Slight
Contact Rating: 1 - Slight
Lab Protective Equip: GOGGLES; LAB COAT; PROPER GLOVES; DUST MASK
Storage Color Code: Orange (General Storage)

Section III - Safe Usage Data

Protective Equipment Types

Eyes: Goggles or safety glasses recommended
Respiratory: NIOSH approved dust mask recommended
Gloves: Rubber gloves recommended
Other: Standard work clothing covering arms and legs

Ventilation

General Mechanical: Yes
Local Exhaust: If dusting is excessive

Precautions

Handling and Storage: Store in cool dry area in enclosed containers
Other: Do not eat; avoid contact with eyes and skin
Keep in a tightly closed container, stored in a cool, dry, ventilated area. Protect against physical damage. Keep away from moisture and oxidizers. Avoid dust dispersal.
Wet activated carbon depletes oxygen from the air and therefore dangerously low levels of oxygen may be encountered in confined spaces. Work procedures for potentially low oxygen areas should be followed.
Containers of this material may be hazardous when empty since they retain product residues (dust, solids); observe all warnings and precautions listed for the product.

Section IV - Emergency Response Data

Fire

As with most organic solids, fire is possible at elevated temperatures or by contact with an ignition source. Activated carbon is difficult to ignite and tends to burn slowly (smolder) without producing smoke or flame. Wet activated carbon depletes oxygen from the air. Materials allowed to smolder for long periods in enclosed spaces, may produce amounts of carbon monoxide which may reach the lower explosive limit for carbon monoxide of 12.5% in air. Contact with strong oxidizers such as ozone or liquid oxygen may cause rapid combustion.

Extinguishing Media: Water spray, dry chemical, alcohol foam, or carbon dioxide.
Special Procedures: None
Unusual Hazards: None

Exposure

First Aid Materials: Dust inhalation: Move to fresh air.
Skin contact: wash areas
Ingestion: seek medical attention.
Eye contact: flush with large quantities of water, seek medical attention

Spills

Steps To Be Taken: Clean floor with broom or shovel.
Waste Disposal: New material may be disposed of in landfill; spent material that has removed toxic chemicals should be examined for specific hazards.

Section V. Physical Hazard Data

Flammability: N/A
Stability: Stable
Hazardous Polymerization: Will not occur
Conditions to Avoid: None
Incompatibility: Protect from water and exposure to contaminated air, otherwise media may be rendered useless.

Section VI - Health Hazard Data

Effects of Exposure

Sulphasorb XL media is non-toxic upon oral, skin, and inhalation exposure and is a non-irritant of the skin. Breathing of dust may cause sneezing. Skin may feel dry after contact.
The phosphoric acid impregnate is corrosive to skin and eyes. Permanent eye injury may results from continued contact.

Emergency Treatment

Flush eye with large quantities of water and seek medical attention.

Section VII - Physical and Chemical Properties

Appearance: Black Granules
Odor: Odorless.
Solubility: Insoluble in water.
Specific Gravity: 1.8 - 2.1
pH: 6.0-9.0
% Volatiles by volume @ 21C (70F): 0
Boiling Point: Sublimes.
Melting Point: 3550C (6422F)
Vapor Density (Air=1): 0.4
Vapor Pressure (mm Hg): 1 @ 3586C (6487F)
Evaporation Rate (BuAc=1): No information found.

Stability and Reactivity

Stability:
Stable under ordinary conditions of use and storage.
Hazardous Decomposition Products:
Involvement in a fire causes formation of carbon dioxide and carbon monoxide.
Hazardous Polymerization:
Will not occur.
Incompatibilities:
Strong oxidizers such as ozone, liquid oxygen, chlorine, permanganate, etc. may result in rapid combustion. Avoid contact with strong acids.
Conditions to Avoid:
Moisture and incompatibles.

Disposal Considerations

Sulphasorb converts hydrogen sulfide into elemental sulfur, thereby eliminating the acidic aspect. Because of this, Sulphasorb XL does not typically have restrictions on disposal. Consult your local disposal requirements.

PureAir Filtration

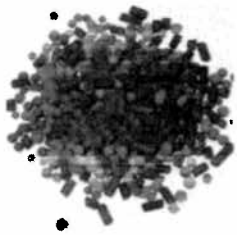

CPS12 Blend Adsorbent Media

Description:

CPS Blend adsorbent media is a 50 percent/ 50 percent blend of PureAir 12 potassium permanganate based media and PureAir AC virgin bituminous activated carbon designed for the broadest range removal of corrosive, odorous, or toxic gases.

Specifications:

PureAir 12 Component

General Description: Spherical or cylindrical porous pellets formed from a combination of powdered activated alumina and other binders, suitably impregnated with potassium permanganate to provide optimum adsorption, absorption, and oxidation of a wide variety of gaseous contaminants.

Removal Capacity:

- Hydrogen Sulfide: 0.20 g/cc min (24% by weight)
- Sulfur Dioxide: 0.11 g/cc min (12% by weight)
- Nitric Oxide: 0.06 g/cc min (7.5% by weight)
- Nitrogen Dioxide: 0.024 g/cc min (3.0% by weight)
- Formaldehyde: 0.04 g/cc min (5.0% by weight)

Manufacturing Quality Assurance Standards:

- Leach Test (indication of porosity)- 180 minute or less
- Permanganate Content: 12 % minimum
- Moisture Content: 20 % maximum
- Crush Strength: 40 to 60 %
- Abrasion Loss: 3.0 % maximum
- Nominal Pellet Diameter: 1/8" (approximately 4 mm), 85% after screening
- Nominal Density: 50 lbs/ft^3 (0.80 g/cc)

PureAir AC Component

General Description: Porous, cylindrical pellets of high grade bituminous activated carbon.

Properties:

- Ash content: 2-3%
- CTC Percentage: 60 to 70 percent
- Surface area: 1200 square meters per gram minimum
- Density: 32 pounds per cubic foot nominal
- Mesh Size: 4 by 6, 90% after screening
- Hardness: 95

Media Remaining Life Testing: Pure Air Filtration provides free quarterly media testing for the life of the media installation. This testing provides critical data including remaining carbon life, remaining permanganate content, total life prediction, moisture content, and projected replacement date. Data is provided for each of the separated components of a blend. All analyses are performed at our certified laboratory.

UL Rating: CPS Blend meets the requirements for a UL Class 1 fire rating.

Pure Air Filtration, LLC
6050 Peachtree Pkwy Suite 240-187
Atlanta, GA 30092 USA
+1 (678) 935-1431 toll free 1-866-543-7479
Fax +1 (678) 935-0648

Visit us at: www.PureAirFiltration.com or
write us at: info@PureAirFiltration.com

PureAir Filtration

6050 Peachtree Pkwy
Suite 240-187
Atlanta, GA 30092
678-935-1431

Material Safety Data Sheet

Product Name: 12 CPS Blend Revision Date: February 15, 2008

Section I - General Information

Manufacturer/Supplier: Pure Air Filtration, LLC
Chemical Name and Synonyms: Potassium Permanganate, Alumina, Carbon
Formula: KMnO4 impregnant (12%) on aluminum oxide (66-70%), Activated Carbon
Proprietary ingredient: less than 10%
Chemical Family: Inorganic Oxidizer
CAS Number: 7722-64-7 DOT Proper Shipping Name: NMFC 13090 ALUMINA

Section II - Hazard Specifications

Known Hazards Under 20 CFR 1910 1200

	Yes	No		Yes	No
Combustible Liquid		X	Skin Hazard		X
Flammable Material		X	Eye Hazard	X	
Pyrophoric Material		X	Toxic Agent		X
Explosive Material		X	Highly Toxic Agent		X
Unstable Material		X	Sensitizer		X
Water Reactive Material		X	Carcinogen		X
Oxidizer		X	Reproductive Toxin		X
Organic Peroxide		X	Blood Toxin		X
Corrosive Material		X	Nervous System Toxin		X
Compressed Gas		X	Lung Toxin		X
Irritant	X		Liver Toxin		X
			Kidney Toxin		X

TLV: N/A DOT hazard Class: N/A EPA Hazard Waste Class: N/A
PEL: N/A NEPA Hazard Signal: N/A

Section III - Safe Usage Data

Protective Equipment Types

Eyes: Goggles or safety glasses recommended
Respiratory: NIOSH approved dust mask recommended
Gloves: Rubber gloves recommended
Other: Standard work clothing covering arms and legs

Ventilation

General Mechanical: Yes
Local Exhaust: If dusting is excessive

Precautions

Handling and Storage: Store in cool dry area in enclosed containers
Other: Do not eat; avoid contact with eyes and skin

Section IV - Emergency Response Data

Fire

Extinguishing Media: 12 CPS Blend is not flammable
Special Procedures: None
Unusual Hazards: None

Exposure

First Aid Materials: Dust inhalation: Move to fresh air.
Skin contact: wash areas
Ingestion: seek medical attention.
Eye contact: flush with large quantities of water, seek medical attention

Spills

Steps To Be Taken: Clean floor with broom or shovel.
Waste Disposal: New material may be disposed of in landfill; spent material that has removed toxic chemicals should be examined for specific hazards.

Section V. Physical Hazard Data

Flammability: N/A
Stability: Stable
Hazardous Polymerization: Will not occur
Conditions to Avoid: None
Incompatibility: Protect from water and exposure to contaminated air, otherwise media may be rendered useless.
Hazardous Decomp PDTS: Dilute $KMnO_4$ solution when wetted.

Section VI - Health Hazard Data

Effects of Exposure

PureAir 8 media is non-toxic upon oral, skin, and inhalation exposure and is a non-irritant of the skin. Breathing of dust may cause sneezing. Skin may feel dry after contact. PureAir 12 media is an eye irritant.

Emergency Treatment

Flush eye with large quantities of water and seek medical attention.

Section VII - Physical and Chemical Properties

Boiling Point: N/A
Vapor Press: N/A
Solubility In Water: Partially soluble
Odor: No significant odor
Appearance: Spherical purple pellets

Vapor Density: N/A
pH: N/A
Will Dissolve in: Concentrated acids and alkalis
Volatile Components: N/A
Evaporation Dates: N/A

6050 PEACHTREE PKWY, SUITE 240-187 ATLANTA, GA 30092
Ph: 678-935-1431, Fax: 678-935-0648

F. Preventative Maintenance

6050 PEACHTREE PKWY, SUITE 240-187 ATLANTA, GA 30092
Ph: 678-935-1431, Fax: 678-935-0648

The DS100 is a low-maintenance unit; once the system has been started, operation is essentially automatic. Routine inspections should include the following:

MONTHLY:

- Blower visual inspection
- Real Time Media Rod inspection (to determine media usage level)

  OR.....
- Collection of Media from sampling ports, to be sent to Pure Air Filtration for analysis

QUARTERLY:

- Cleaning of Mist and Grease Eliminator pad, via immersion in a hot soapy water, pressure washing, or a combination of both.

PureAir Filtration
6050 PEACHTREE PKWY, SUITE 240-187 ATLANTA, GA 30092
Ph: 678-935-1431, Fax: 678-935-0648

G. Warranty Information

6050 PEACHTREE PKWY, SUITE 240-187 ATLANTA, GA 30092
Ph: 678-935-1431, Fax: 678-935-0648

WARRANTY INFORMATION

LIMITED WARRANTY

Pure Air Filtration Ltd. warrants Pure Air products and parts to be free from defects in workmanship and material under normal use and service one (1) year after startup or 18 months after equipment delivery. Our obligation under this warranty is limited to repairing or replacing, at our option, any defective part or parts, if they are returned to Pure Air within the warranty period with transportation charges prepaid and are found by our own examination to have been defective. Any request for repair or replacement should be directed to Pure Air Filtration LLC, 6050 Peachtree Pkwy, Suite 240-187, Atlanta, Georgia 30092, phone (678)935-1431 or 1- 866 543 7479, fax (678) 935-0648, email info@pureairfiltration.com

LIMIT OF WARRANTY AND LIABILITY

This warranty does not apply to any Pure Air Filtration products and parts which have failed as a result of faulty installation, abuse, incorrect electrical connections or alterations made by others, use under abnormal operating conditions, or misapplication of the products and/or parts.

Pure Air Filtration will not approve for payment any repairs made outside its factory without prior written consent of its Atlanta head office.

In no event whether as a result of breach of contract or warranty, or alleged negligence, defects, incorrect advice or other causes, shall Pure Air Filtration be liable for special or consequential damages, including but not limited to loss of profits or revenue, loss of use of the equipment or any associated equipment, cost of substitute, facilities or services down time costs, or claims of customer of the purchaser for such damages. Pure Air Filtration neither assumes nor authorizes any person to assume for it any other liability in connection with the sale of its products and parts.

The foregoing shall constitute our sole and exclusive warranty and our sole and exclusive liability and is in lieu of all other warranties, whether written, oral, implied or statutory. There are no warranties which extend beyond the description on the page hereof.

ATTACHMENT U

VACTOR TRUCK 2100 SOP

March 2019; Revised June 2019; Revised March 2020; Revised February 2021

VACTOR 2100 SOP

Pre-Operation:

1. Pre-operational, Be familiar with operator's manual.
2. Pull both filter screens located at the water fill inlet and rodder pump weekly.
3. Check High Pressure Water Hose for kinks or exposed braid-2500psi max. Check valves and hose connections for signs of leakage.
4. Secure compartment doors and tubing.
5. When swinging boom, change direction slowly. Observe overhead obstacles before boom movement.
6. Only one person operates the boom and one-person signals and assists the operator.
7. When positioning truck to work, have spotter assist in backing and working position.
8. Properly secure all equipment and miscellaneous items before leaving yard or job site.
9. Do not load dump body beyond rated capacity.
10. Be aware of possible load surge when turning or braking.
11. Check to see that tailgate is properly secured after dumping.
12. Use safety stand when working under raised dump body.
13. Keep cab clean.
14. Use hearing protection.

Personal Protective Equipment:

1. Safety glasses with side shields or goggles.
2. Work gloves.
3. Hardhat.
4. Protection suit

Operation:

Engagement of VACUUM mode requires a special procedure. Parking brake ON, foot on brake pedal:

1. Trans selector NEUTRAL
2. Engage VACUUM switch, wait 5 seconds.
3. Select Drive-transfer case will engage (trans will indicate 4-4).

To Stop Vacuum:

1. Idle engine
2. Select Neutral
3. Disengage WORK switch and wait 5 seconds. It is now safe to use. Drive Trans will indicate 6-1. Disengage Master Switch.

Start Vacuum Controls at 1,100 RPM
Do not bury the vacuum tube.
Always keep 1 water valve open
If using both water and vacuum, use the following order: 1, 2, 3, 2, 3, 4, 4. (start at idle speed)

End of the Day:

Clean box interior, rear seal, float ball cages. Don't leave material between door and body frame to prevent breaking lock blocks. **DO NOT ENTER THE REAR DOOR AREA BEFORE EXTENDING THE SAFETY PROPS!** (Remember to stow the props before closing door).

Engine OFF, Engine Cool

Check	Item	Date
❑	Radiator Coolant	_____
❑	Battery Water	_____
❑	Hydrometer	_____
❑	Drive Belts	_____
❑	Fan	_____
❑	Alternator	_____
❑	Crankcase Oil	_____
❑	Fuel Tank	_____
❑	Transmission Fluid	_____
❑	Brake Function	_____
❑	Brake Fluid	_____
❑	Instrument Gages	_____
❑	Windshield Wipers	_____
❑	Windshield Washers	_____
❑	Mirrors	_____
❑	Tire Wear	_____
❑	Tire Damage	_____
❑	Tire Inflation	_____
❑	Hoses	_____
❑	Frame	_____

Engine OFF

Check	Item	Date
❑	Hydraulic oil level	_____
❑	Aux engine oil level	_____
❑	Vacuum valves	_____
❑	Fan transmission oil level	_____
❑	Access door secured	_____
❑	Hoses, tubing, loose items secured	_____
❑	Water pump case oil level	_____

Engine ON

Check	Item	Date
❑	Engine Sound & Exhaust	_____
❑	Foot Brakes	_____
❑	Emergency Brake	_____
❑	Power Steering	_____
❑	Cab Lights	_____
❑	Headlights	_____
❑	Tail lights	_____
❑	Turn Signals, Rear	_____
❑	Turn Signals, Front	_____
❑	Clearance Lamps, Front	_____
❑	Clearance Lamps, Rear	_____
❑	Marker Lamps, Front	_____
❑	Marker Lamps, Rear	_____
❑	Instrument Panel Lamps	_____
❑	Instrument Panel Gages	_____
❑	Horn	_____
❑	Heating and Ventilating	_____
❑	Air Conditioning	_____
❑	Mirrors	_____
❑	Seating	_____
❑	Test Drive	_____

Both Engines ON - parking brake set

Check	Item	Date
❑	Open rear door	_____
❑	Install rear door safety prop	_____
❑	Inspect vacuum float balls	_____
❑	Inspect, clean rear door seal	_____
❑	Store rear door safety props	_____
❑	Close rear door	_____
❑	Hydraulic pump ON when PTO is engaged	_____

***Note**: It is recommended that the CHECK LIST be copied and used prior to each job. Failure to monitor the items included in the check list prior to each job will increase the risk of accidental injury to personnel and/or damage to the equipment.*

ATTACHMENT V

CONFINED SPACE TRAINING

March 2019; Revised June 2019; Revised March 2020; Revised February 2021

© 2011 Courage Safety Systems, LLC., San Clemente, CA 92673 Tel: (800) 673-7569 www.TailgateTalks.com

Company Name:_____ Dept:_____ Location:_____ Date:_____

#078

CONFINED SPACES

Confined spaces can include tanks, silos, pits, vaults, pipelines, manholes, digesters, etc. But there are many other restrictive areas that qualify as well. A "Confined Space" is defined as a space which has any on of the following characteristics:

- It has limited openings for entry and exit
- It has unfavorable natural ventilation
- It is not designed for continuous worker occupancy

Hazardous atmospheres in confined spaces present one of the greatest dangers to workers. Oxygen deficient atmospheres have less that 19.5% available oxygen. Do not enter an atmosphere with less that 19.5% oxygen without an approved, self-contained breathing apparatus! Flammable atmospheres contain two things that make them flammable: the oxygen in the air plus a flammable gas, vapor, or dust in the proper mixture. Toxic materials stored or used in the confined space, or in adjacent areas, can create toxic atmospheres. Ventilate with a blower or fan to remove harmful gases and vapors if necessary. The atmosphere of any confined space should be tested by a competent person before each shift or before any worker enters the space. Any power sources in the confined space which could present a hazard should be isolated and locked out. You may need to lock our electrical power, blank and bleed pneumatic and hydraulic lines, disconnect belt and chain drives and mechanical linkages on shaft-driven equipment, and secure mechanical moving parts within the confined space with latches, chains, chocks, blocks or other devices.

A standby person should be assigned to remain on the outside of the confined space and be in contact with the workers inside, either visually or verbally. The standby person should not have any other responsibilities and be able to call for immediate assistance in case of an emergency.

Meeting Conducted By: _____ _____

Print Name **Signature**

Meeting Attended By:

_____ _____
_____ _____
_____ _____
_____ _____
_____ _____
_____ _____
_____ _____

Document Filing Reference

Notes & Suggestions

Filling Instructions: Copies of this "Tailgate Talk" should be filed in employer's safety training records and cross-referenced in each employee safety-training file. This is intended as a guide only- all rights reserved.

CONFINED SPACE ENTRY PERMIT

Confined Space Location/Description/ID Number **Date:**

_____

Purpose of Entry

_____

_____

Time In: _____ **Permit Canceled Time:** _____

Time Out: _____ **Reason Permit Canceled:** _____

Supervisor: _____

Rescue and Emergency Services-

Hazards of Confined Space	Yes	No	Special Requirements	Yes	No
Oxygen deficiency			Hot Work Permit Required		
Combustible gas/vapor			Lockout/Tagout		
Combustible dust			Lines broken, capped, or blanked		
Carbon Monoxide			Purge-flush and vent		
Hydrogen Sulfide			Secure Area-Post and Flag		
Toxic gas/vapor			Ventilation		
Toxic fumes			Other- List:		
Skin- chemical hazards			**Special Equipment**		
Electrical hazard			Breathing apparatus- respirator		
Mechanical hazard			Escape harness required		
Engulfment hazard			Tripod emergency escape unit		
Entrapment hazard			Lifelines		
Thermal hazard			Lighting (explosive proof/low voltage)		
Slip or fall hazard			PPE- goggles, gloves, clothing, etc.		
			Fire Extinguisher		

Communication Procedures:

_____

DO NOT ENTER IF PERMISSABLE ENTRY LEVELS ARE EXCEEDED		**Test Start and Stop Time:** **Start**	**Stop**
	Permissable Entry Level		
% of Oxygen	19.5 % to 23.5 %		
% of LEL	Less than 10%		
Carbon Monoxide	35 PPM (8 hr.)		
Hydrogen Sulfide	10 PPM (8 hr.)		
Other			

Name(s) or Person(s) testing: _____

_____

Test Instrument(s) used- Include Name, Model, Serial Number and Date Last Calibrated:

CFM-Ventilation	Size-Cubic Feet	Pre Entry Time	❑ Central Notified Before Entrance	Time Notified:
			❑ Central Notified After Entrance	Time Notified:

SafetyToolboxTopics

www.SafetyToolboxTopics.com

What Is A Confined Space?

Print

A confined space does not necessarily mean a small, enclosed space. It could be rather large, such as a ship's hold, a fuel tank or a pit.

One of the first defining features of a confined space is it's large enough to allow an employee to enter and perform work. The second defining feature is it has limited means of entry or exit. Entry may be obtained through small or large openings and usually there is only one way in and out. The third defining feature is that confined spaces are not used for continuous or routine work.

Permit or not

All confined spaces are categorized into two main groups: non-permit and permit-required. Permit-required confined spaces must have signs posted outside stating that entry requires a permit. In general, these spaces contain serious health and safety threats including:

- Oxygen-deficient atmospheres
- Flammable atmospheres
- Toxic atmospheres
- Mechanical or physical hazards
- Loose materials that can engulf or smother

Although the danger in a confined space is obvious, the type of danger often is not. For example, a confined space with sufficient oxygen might become an oxygen-deficient space once a worker begins welding or performing other tasks.

These are some of the reasons confined spaces are hazardous:

- Lack of adequate ventilation can cause the atmosphere to become life threatening because of harmful gases.
- The oxygen content of the air can drop below the level required for human life.
- Sometimes a confined space is deliberately filled with nitrogen as a fire prevention technique. Nitrogen cannot sustain human life, so you must use respiratory protection.
- Many gases are explosive and can be set off by a spark.
- Even dust is an explosion hazard in a confined space. Finely-ground materials such as grain, fibers and plastics can explode upon ignition.
- Confined spaces often have physical hazards, such as moving equipment and machinery.
- Tanks and other enclosed confined spaces can be filled with materials unless the flow process for filling it is controlled.

Before entering any confined space you must test the atmosphere to determine if any harmful gases are present. There must also be radio contact with an attendant outside the confined space and a rescue team at the ready in case of an emergency.

What confined spaces do we have around our workplace? Which are permitted? Can any of them be reclassified?

This toolbox topic was reviewed by

_____ on

_____ with the following employees:

ATTACHMENT W

2019-2023 INJURY REPORT

March 2019; Revised June 2019; Revised March 2020; Revised February 2021; Revised January 2024

2019

TOWN OF HIGHLAND INJURIES FOR THE MONTH

DECEMBER

CASE	DATE OF INJURY	DEPARTMENT	DESCRIPTION	Record Only No Med Treament	OSHA Recordable	Not OSHA Recordable	Filed with WC Insurance
RO-10	12/14/19	POLICE	While processing a prisoner Ofc. observed subject put unknown substance in his mouth Ofc. went to remove object from subject's mouth when officer was bitten on finger	X		X	X
RO-11	12/30/19	Building & Inspection	EE stepped on a wood stair leading to deck which was wet, may have had ice, resulting in slipping & falling on his back.	X		X	X
RO-12	12/31/19	Public Works	while shoveling, EE slipped and fell injuring his left shoulder.	X		X	X
RO-13	12/31/19	Public Works	While in freshly dug hole EE was in the hole digging to access water main, a pump was in front of him. Earth slid into the back of his knee pinning the rt knee between the pump & the landslide.	X		X	X

RO = Record Only

DEPARTMENT	INJURIES THIS MONTH	YEAR TO DATE	TOTAL 2018	RESTRICTED DAYS THIS YEAR	LOST DAYS THIS YEAR	RESTRICTED DAYS 2018	LOST DAYS 2018
PARK & REC			4			0	0
FIRE		1	0			0	0
POLICE	1	4	3			0	0
STREET		1	2			0	0
WATER/SEWER	2	5	4			80	46
MAINTENANCE		1	1	14	2	0	0
OTHER	1	1	0			0	0
TOTALS	4	13	14	14	2	80	46

Effective January 1, 2002 OSHA changed the recordkeeping guidelines. We now count the number of days lost from the day after the injury until the employee returns to work. Weekends, holidays, vacation days or other days scheduled off are included in the lost days count to a maximum of 180 days

2020

TOWN OF HIGHLAND INJURIES FOR THE MONTH

DECEMBER

CASE	DATE OF INJURY	DEPARTMENT	DESCRIPTION	Record Only No Med Treament	OSHA Recordable	Not OSHA Recordable	Filed with WC Insurance
RO-7	12/22	POLICE	Officer was making a physical arrest of a male for trespassing when the male resisted & struck the officer	X		X	X

RO = Record Only

DEPARTMENT	INJURIES THIS MONTH	YEAR TO DATE	TOTAL 2019	RESTRICTED DAYS THIS YEAR	LOST DAYS THIS YEAR	RESTRICTED DAYS 2019	LOST DAYS 2019
PARK & REC		2				0	0
FIRE			1			0	0
POLICE	1	2	4			0	0
STREET		1	1			0	0
WATER/SEWER		2	5	93	81	0	0
MAINTENANCE			1			14	2
OTHER			1			0	0
TOTALS	1	7	13	93	81	14	2

Effective January 1, 2002 OSHA changed the recordkeeping guidelines. We now count the number of days lost from the day after the injury until the employee returns to work. Weekends, holidays, vacation days or other days scheduled off are included in the lost days count to a maximum of 180 days

J. Michael 1-7-2020

2021

TOWN OF HIGHLAND INJURIES FOR THE MONTH

DECEMBER

CASE	DATE OF INJURY	DEPARTMENT	DESCRIPTION	Record Only No Med Treament	OSHA Recordable	Not OSHA Recordable	Filed with WC Insurance
RO-7	12/18/21	POLICE	Suspect fled into Ofc. In an attempt to flee arrest which resulted in a tackle to the ground and a struggle to detain. Injuring ofc's right shoulder.	X		X	X

RO = Record Only

DEPARTMENT	INJURIES THIS MONTH	YEAR TO DATE	TOTAL 2020	RESTRICTED DAYS THIS YEAR	LOST DAYS THIS YEAR	RESTRICTED DAYS 2020	LOST DAYS 2020
PARK & REC			2			0	0
FIRE		1				0	0
POLICE	1	4	2		10	0	0
STREET			1			0	0
WATER/SEWER		2	2	32		93	81
MAINTENANCE						0	0
OTHER						0	0
TOTALS	1	7	7	32	10	93	81

Effective January 1, 2002 OSHA changed the recordkeeping guidelines. We now count the number of days lost from the day after the injury until the employee returns to work. Weekends, holidays, vacation days or other days scheduled off are included in the lost days count to a maximum of 180 days

2022

TOWN OF HIGHLAND INJURIES FOR THE MONTH

DECEMBER

CASE	DATE OF INJURY	DEPARTMENT	DESCRIPTION	Record Only No Med Treament	OSHA Recordable	Not OSHA Recordable	Filed with WC Insurance
			No Injuries for the month of December				

RO = Record Only

DEPT	2022 INJURIES THIS MONTH	2022 YEAR TO DATE	TOTAL 2021	2022 RESTRICTED DAYS THIS YEAR	2022 LOST DAYS THIS YEAR	RESTRICTED DAYS 2021	LOST DAYS 2021
PARK & REC		3			25		
FIRE			1				
POLICE		7	4		67		10
STREET		1			44		
WATER SEWER		1	2			32	
MAINTENANCE		5	2		77		
OTHER							
TOTALS	0	17	9	0	213	32	10

Effective January 1, 2002 OSHA changed the recordkeeping guidelines. We now count the number of days lost from the day after the injury until the employee returns to work. Weekends, holidays, vacation days or other days scheduled off are included in the lost days count to a maximum of 180 days

	2023			2023			
DEPT	**INJURIES**	**YEAR TO**	2022	**RESTRICTED**	**LOST DAYS**	RESTRICTED	LOST DAYS
	THIS MONTH	**DATE**	Total Injuries Last Year	**DAYS THIS YEAR**	**THIS YEAR**	DAYS 2022	2022
PARK & REC			3	**8**	**188**		25
FIRE		**1**					
POLICE		**6**	7	**80**	**66**		67
STREET			1				44
WATER SEWER		**1**	1				
MAINTENANCE			5				77
OTHER							
TOTALS	**0**	**8**	17	**88**	**254**	0	213

ATTACHMENT X

SCADA OPERATION MANUAL

March 2019; Revised June 2019; Revised March 2020; Revised February 2021

Scadata Software Suite ™

Data Acquisition and Management Software Suite

User Manual

Copyright © 2015 by Scadata, Inc. All rights reserved.

No part of this manual or accompanying software may be reproduced or transmitted in any form or by means, electronics or mechanical, including photocopying, recording or by any information storage and retrieval system, without permission in writing from Scadata Inc.

Scadata, Inc.
1818 Research Dr, Fort Wayne, In. 46808
Main: +260-373-0100 FAX: +260-482-4020 www.scadata.net

Version 4.2.5 **January, 2015**

TABLE OF CONTENTS Page

1 INTRODUCTION TO THE SCADATA SOFTWARE SUITE 5

1.1 THE SOFTWARE OPERATOR INTERFACE 5

2 SCADATA DEVICE MONITOR SECURITY FEATURES 7

2.1 LOGIN 8
2.2 LOGGING INTO THE SOFTWARE 8
2.3 ACCOUNT ADMINISTRATION 8
2.4 USERS 9
2.5 SYSTEM FUNCTIONS 9

3 DEVICE CONFIGURATION "DEVICES" 10

3.1 CREATING A NEW DEVICE 10
3.2 DIGITAL INPUTS 11
3.3 ANALOG INPUTS 11
3.4 ANALOG OUTPUTS (OUTPUTS ARE ONLY USED FOR CONTROLS) 12
3.5 DIGITAL OUTPUT 12
3.5.1 DEVICE EMAIL TEXT (ADDITIONAL NOTIFICATION TEXT) 12
3.6 EDITING A DEVICE 12

4 TAG CONFIGURATION 13

4.1 CREATING A NEW TAG 13
4.2 TYPES OF TAGS 14

5 CONTROL AND EVENT SETUP-CONTROLS CONFIGURATION 15

5.1 EDITING THE EVENT 16
5.2 EDITING THE OUTPUTS FOR EVENT 16
5.3 ALTERING THE ORDER OF EVENTS 17
5.4 CALENDAR EVENT CONFIGURATION 18
5.5 CREATING A NEW CALENDAR EVENT 18
5.6 CONTROL VIS 19

6 TRENDING CONFIGURATION 19

6.1 CREATING A NEW TREND 20
6.2 EDITING AN EXISTING TREND GRAPH 20
6.3 DELETING AN EXISTING TREND GRAPH 20

7 FILE REPORT CONFIGURATION 20

7.1 CREATE A NEW REPORT 21
7.2 EDITING AN EXISTING REPORT 21
7.3 DELETING A REPORT 21

8 PRINT REPORT 21

8.1 PAGE LAYOUT 22
8.2 PRINT REPORT TIME 22
8.3 REPORT TYPE 23
8.4 REPORT ITEMS 23
8.5 SET FONT 24
8.6 APPEND TEXT 24
8.7 APPEND TABLE 25
8.8 APPEND IMAGE 25
8.9 APPEND GRAPH 25
8.10 APPEND TAG LIST 25
8.11 DELETING REPORT ITEMS 26
8.12 SELECT ITEMS TO ADD 26
8.13 REARRANGING REPORT ITEMS 26

9 USER NOTIFICATION CONFIGURATION 26

9.1 NOTIFICATION TYPES 27

10 GROUP NOTIFICATION CONFIGURATION 27

11 CONFIGURING THE SOFTWARE – "SETTINGS" 27

11.1 SETTINGS 28
11.2 NOTIFICATION CONFIGURATION 28
11.3 QUERY SETUP 28
11.4 LOGGING LIST 28
11.5 DEVICE COMM 29
11.6 LOGGING 29
11.7 NOTIFICATIONS 30
11.7.1 Notification Options 30
11.8 LOCAL ALARM PORT 31

12 HELP 31

13 VIEWING THE DEVICE STATUS DISPLAY 31

13.1 DEVICES ON NETWORK 32
13.2 QUERY DEVICE 32
13.3 SELECTED DEVICE DISPLAY 32
13.4 DEVICE ALARM HISTORY 33
13.5 ACKNOWLEDGING ALARMS AND RESETTING RUNTIMES 33
13.6 DIGITAL OUTPUT VALUES 33

14 VIEWING THE TAG DISPLAY 34

15 VIEW HISTORICAL DATA 34

16 TRENDING GRAPHS 35

17 CREATE FILE REPORT 36

18 PRINTED REPORT 36

19 CUSTOM SCREENS 37

20 EXITING THE SCADATA SOFTWARE SUITE 37

Minimum Computer Requirements

- Microsoft – Windows XP Service Pack 2, Windows Server, Vista, 7 or 8 (x32/x64), 8.1 Operating System
- Intel Pentium 4, 2.4GHz Processor equivalent or faster
- 500 Gigabyte or greater hard drive
- DVD + - RW combo drive
- 1 Gigabyte DDR dual channel ram or greater
- Supplementary PCI dual com port card or USB to Serial Adaptor
- Video Resolution 1024 x 768 monitor or better, keyboard, and mouse.

Additional Hardware Recommendations

- Scadata also recommends using a 1Gigabyte or greater USB Flash Drive for the backup and safe storage of setup files.
- DB-9 Surge Protector
- UPS (uninterruptable power supply) power back-up

Version 4.2- Update Highlights

- Added compatibility to select SMTP Email Ports other than Port 25 – Port 25 was a common Port for Email servers to use for sending Emails. Internet Providers have started to block Port 25 not allowing outgoing Emails. This upgrade allows Scadata Software Suite users to use alternate Ports. (Figure 6-4)
- Added user name and password fields for SMTP Email notification. Some Internet service providers have blocked outgoing Email without authentication. With the added user name and password, the Email account is authenticated as a valid user. (Figure 6-9)
- Added Windows Vista and Windows 7 or 8 (x32/x64) operating system support into our core Scadata Software Suite.
- Added the ability for the user to select printer for Print Reports. (Figure 5-1)
- Added Report Options- Microsoft Excel, Word and HTML
- Added Device Interfaces- National Instruments- cRIO, PMX, DAQ. Allen Bradley- Modbus/IP, OPC

LIST OF TABLES _____ Page

Table 1-1 Primary Buttons on Operator's Main Window *5*
Table 4-1 Tag Types *14*
Table 5-1 Comparative Operators and Definitions *17*
Table 6-1 Trend and Report Tag Functions *20*
Table 8-1 Available Tokens *24*
Table 13-1 Color Designation Information *32*
Table 13-2 Color Representation Table *32*

LIST OF FIGURES Page

Figure 1-1 Scadata Main Menu for Administrators....7
Figure 2-1 Login Screen....8
Figure 2-2 Account Manager Screen....8
Figure 2-3 User Information Screen....9
Figure 2-4 Authority Requirements Screen....9
Figure 3-1 Create and Edit Device Display....10
Figure 3-2 Create New Device....10
Figure 3-3 Digital Input....11
Figure 3-4 Analog Input....11
Figure 3-5 Device Configuration Outputs....12
Figure 4-1 New Tag....13
Figure 5-1 Control Events....15
Figure 5-2 Add/Edit Control Events Tool....15
Figure 5-3 Calendar Event List....18
Figure 5-4 Add/Edit Calendar Events Tool....18
Figure 5-5 Control VI Example....19
Figure 6-1 View Trending Graph Configuration Screen....19
Figure 7-1 File Report Configuration Tool....20
Figure 8-1 Print Report Generation Configuration Tool....21
Figure 9-1 User Notification Configuration Screen....26
Figure 10-1 Group Notification Configuration Screen....27
Figure 11-1 Settings: Query Setup....28
Figure 11-2 Settings: Logging List....28
Figure 11-3 Settings: Device Comm....29
Figure 11-4 Settings: Logging....29
Figure 11-5 Settings: Notification....30
Figure 11-6 Settings: Local Alarm Port Tab....31
Figure 13-1 Device Status Display....31
Figure 13-2 Set Digital Output Values....33
Figure 14-1 Tag Display....34
Figure 15-1 Historical Graph Tag Selection....34
Figure 16-1 Trending Graph Options....35
Figure 16-2 Trending Graph Selection....35
Figure 16-3 Trending Graph Display (Six visible trends)....35
Figure 17-1 File Report Selection Screen....36
Figure 18-1 Print Report....36
Figure 19-1 Weather Station Custom Screen....37
Figure 19-2 Water Treatment System Custom Screen....37

1 Introduction to the Scadata Software Suite

The Scadata Software Suite was developed to supervise a network that can consist of over 9,500 Devices and the data channels (Inputs/Outputs) associated with those devices. This software is a **LabVIEW** application developed using **National Instrument's LabVIEW** software, but not limited to the usage of the National Instrument's hardware. It monitors and logs data on multiple devices. This software provides the user with intuitive and flexible tools for configuring devices, control and viewing the status of an entire network, generating custom reports about the network and viewing custom trend graphs, to monitor historical data. The ability of a user to execute/modify these reports and trend graphs is based on user permissions. Users and their corresponding permissions fall into different user membership groups specified by developers or administrators

1.1 The Software Operator Interface

The Software uses a menu driven interface to communicate with the user. The primary buttons on the main window to configure, view, print the station and device information.

Table 1-1 Primary Buttons on Operator's Main Window

Button	Function	Section
Login	Allows the user to login to the system and gain access to configuration functions	2.1
Logout	Logout the current user; the software is still running and allows anyone access to the Operations Summery only.	Figure 1-1
Settings	Provides access to Modbus port and the local alarm port. Also sets up devices on network to query, and devices on network to log a history file.	11.1
Devices	Access for adding and editing devices on the network	3
Tags	Access for adding and editing the tag values.	4
Controls	Access for adding or editing control statements and calendar events to occur on the network	5
Trending	Access for creating trend graph configurations and editing saved configurations	6
File Report	Access to tool for creating text file report configurations and editing saved configurations	7
Print Report	Access to tool for creating printed report configurations and editing saved configurations	8
User Notifications	Access to tool for creating and editing users for the notification group.	9
Group Notifications	Access to tool for creating and modifying notification groups that can be assigned to tag values.	10

Settings	Access to tool for configuring the software	11
Apply Changes	Applies pending changes/ updates and starts data acquisition and communication. Software Running light will be green.	Figure 1-1
Help	Displays the Scadata Software Suite Manual	12
Device Status Display	Status for all devices on the network is visible from this display. Alarms can be acknowledged as well as the digital outputs configured.	13
Tag Display	Displays selected tag's values, as well as providing the ability to modify memory tag values.	14
Historical Data	Displays the Historical Data Viewer Screen.	15
Trending Graphs	Opens display for viewing of pre-configured trend graphs.	16
Create File Report	Generates a list of all available reports and allows the user to select a report to be written to a disk.	17
Create Print Report	Displays the Print Report Dialog Screen and allows the user to select a report to print.	18
Custom Screens	Displays a Custom Screen Dialog Window that allows the user to select available custom screens to launch.	19
Save Changes	Stops the data acquisition and communication; queries pending changes and updates. Software Running light will be off or black.	Figure 1-1
Manage Users	For Administrators only, provides access to tools for accessibility options, login and password management.	2.4
Exit	Stops and shuts down the software application	20

Helpful Hints:

Digital signals are either ON (1) or OFF (0). Digital input signals are used to represent items that only have two states, such as, ON or OFF states ALARM or NORMAL conditions. Digital output signals are used to control items that again only have two states, such as, START or STOP a device turn an indicator ON or OFF. Analog signals are variable, they have multiple states. Analog input can represent such items as temperature or level or rate of flow. Analog output signals are also variable and can be used for such things as opening a valve to a desired position. So, use digitals for 2 state devices and analogs for multiple state devices.

**Even though changes are saved as you go they do not take effect until you "Save Changes" and "Apply Changes". Both can be found on the bottom of the main screen. (Figure 1-1)

Figure 1-1 Scadata Main Menu for Administrators

2 Scadata Device Monitor Security Features

The features available to you depend on your login Group Membership (section 2.4). An administrator of the software system can designate your user name as a member of one or more Groups. In turn, different Groups are authorized to perform particular operations or system functions. This chapter describes the software security features, which includes login, account administration, and system function administration.

2.1 Login

The system provides screens to login, change a password, and administer accounts. The **Login** button on the Main Menu (Figure 1-1) provides access to these features. The Login Screen (Figure 2-1) is used to enter your user name and password.

2.2 Logging into the Software

Only administrators can add or delete users. The login screen (Figure 2-1) pops up when a user presses the **Login** button on the Main Menu (Figure 1-1).

1. Enter **User Name**. (Default User ID: Admin, Password: password)
   *** Administrator User ID and Password might be pre-configured ***
2. Press **<Tab>** OR you can put your cursor in the password box.
3. Enter the **Password**.
4. Click **OK**.
5. If the login fails, contact the software administrator.

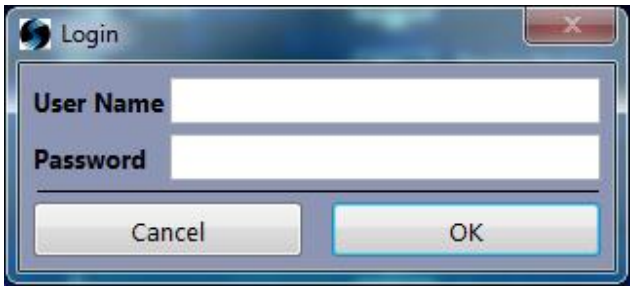

Figure 2-1 Login Screen

If the current user is a member of the Administrators Group, the **Main Menu** will have an additional button, **Manager Users** (Figure 1-1), to provide access to the account administration features.

2.3 Account Administration

A user that is an Administrator can manage the system user accounts and system functions that need authority requirements. The Account Manager screen (Figure 2-2) is accessed by clicking the **Manage Users** button on the main menu. This screen and its menus provide access to the Users and System Functions administration utilities.

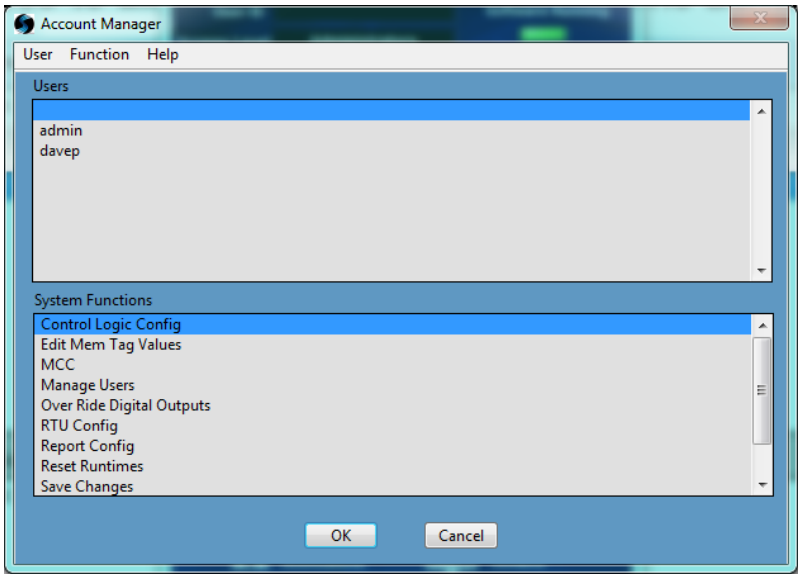

Figure 2-2 Account Manager Screen

2.4 Users

Administrators can manage User Accounts by selecting **Edit User Properties** from the (Figure 2-2) **Account Manager** screen's **User** menu on the top left of the screen or by double-clicking a user from the list opens the **User Information** screen (Figure 2-3).

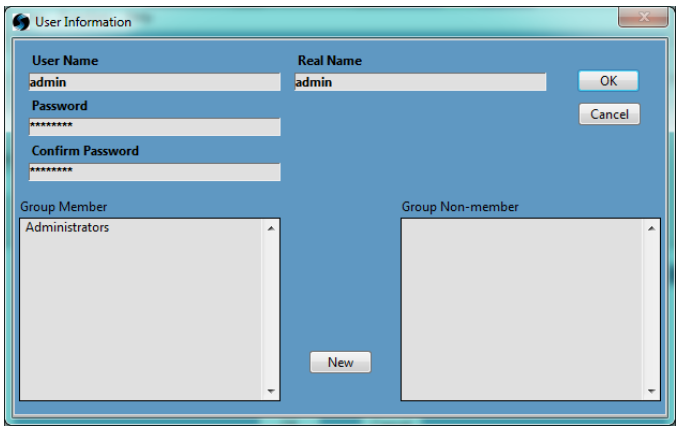

Figure 2-3 User Information Screen

The User Information screen displays available Groups to add or remove from the users account. To add Groups to the user's account, click the appropriate group from the **Group Non-Member** box and then click the ***<<Add*** button**.** To remove a Group from the user account, select the appropriate Group in the **Group Member** box and then click the **Delete>>** button**.**

***New Groups can be added by clicking the **New** button and then keying a defined name in either the **User Information Screen** (Figure 2-3) or the **Authority Requirements Screen** (Figure 2-4)

2.5 System Functions

System functions are used to control access to specific system features within a group. When adding or deleting a function you must select the function from the **Account Manager** screen (Figure 2-2) and either double click on the selected function or go to the **Functions** menu on the top of the screen and select the **Edit Authority List**, both ways will open the **Authority Requirements** screen (Figure 2-4). To add a group to the selected function select the Group from the **Unauthorized Group** list and click the ***<<Add*** button. When deleting the selected function from an Authorized Group click on the group and press the **Delete>>** button. To get to another function you must select **OK** to save changes or **Cancel** to cancel changes; and select a new function from the **Account Manager** screen (Figure 2-2).

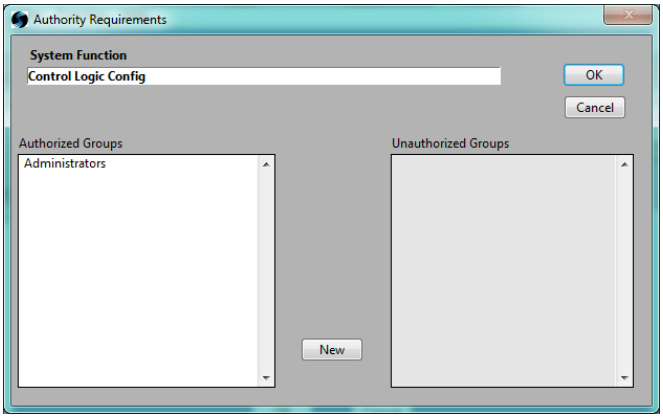

Figure 2-4 Authority Requirements Screen

3 Device Configuration "Devices"

The **Device Configuration** button is used to edit devices (Figure 3-1) that are on the network as well as configure the names and values of tags for the device. Tags are analog input and output channels and digital input and output channels that are available for each device. Each channel needs a custom name since two names cannot be the same.

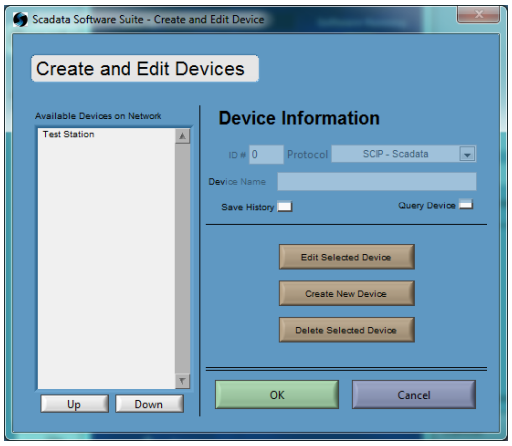

Figure 3-1 Create and Edit Device Display

3.1 Creating a New Device

To create a new device press the **Create New Device**, the Device Name can be any string of characters, while the Device ID can be any number between 1 and 9999. The protocol selects the communication that the device is using *(IP Address and Port must be defined based on protocol selected and can be found on your network settings on the device* Figure 3-2*).*

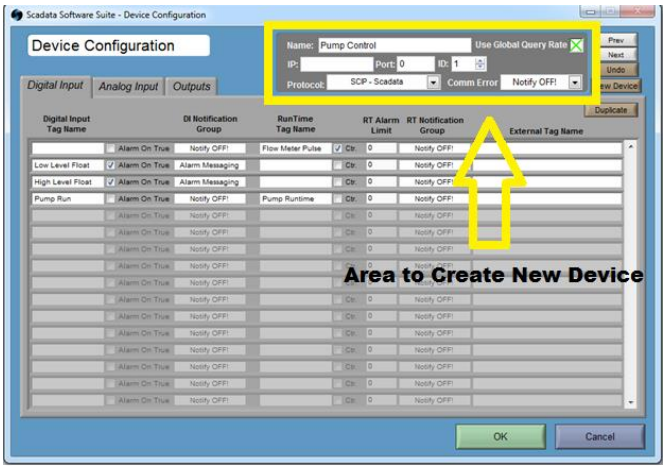

Figure 3-2 Create New Device

The **Prev** and **Next** buttons on the right hand side can be used to step through each device that is configured without returning to the Device Create/Edit Screen.
The *Query Rate* input is used to configure the rate at which the device is queried. It specifies the amount of time between subsequent queries for the individual device. The *Use Global Query Rate* checkbox is used to specify that the *Device Query* rate defined in the System Configuration is used for this device. Pressing **New Device** creates a new device to be edited. For Digital/Analog Inputs and Outputs, there is a column in which the user can enter an "external tag name." This can be thought of as a channel name and gives a name to the input or output that makes sense to the user. The external tag name could refer to the channel of the device that is associated with the input/output (Mod1/AI0, Mod3/DO1).

3.2 Digital Inputs

Within the Digital Input (DI) tab, DI Tag name is user defined with any character string (*note: shorter names are preferred for ease of viewing in software.*) When the **Alarm on True** is checked will display tag name in red on the Device Status Display Screen (section 13) when alarm condition exists. DI notification group defines the user group to be notified when DI turns on (*without delay*). Run Time (RT) Tag Name is used with RTUs; it contains RT capability and is user definable. Checking the (Ctr) counter box changes how run times appear to a 00 format, where if not checked displays hh:mm. The RT alarm limit specifies amount of time that must pass before an alarm notification is sent. The RT notification group defines the user group to be notified when RT alarm limit is met. External tag name is defined based on the chosen protocol and hardware used (*defined on physical device*).

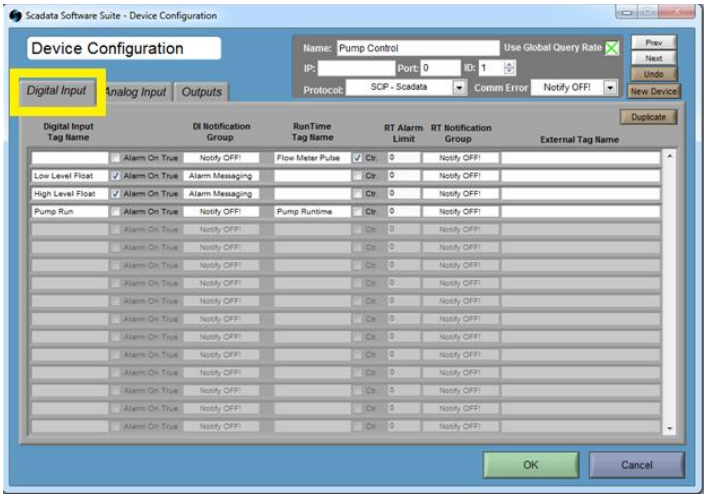

Figure 3-3 Digital Input

3.3 Analog Inputs

To configure Analog Inputs (AI), enter a unique character string for the tag name *(the system will verify all tag names are unique when the setup is saved)*. A slope and offset can be defined for each analog input based on device or sensor attached/tagged. The Raw Offset is subtracted from the Raw Value read before the slope and offset are applied to compute the value. The Hi limits and Lo limits are used for alarms based on slope/offset. If the limits are reached it will trigger an alarm for the tag on that device (section 13.3 Selected Device Display). A notification group can be selected for each analog input tag. This group is notified whenever the tag value exceeds the limits. Use the scrollbar to go through the entire list of analog inputs for a given device. (Figure 3-4)

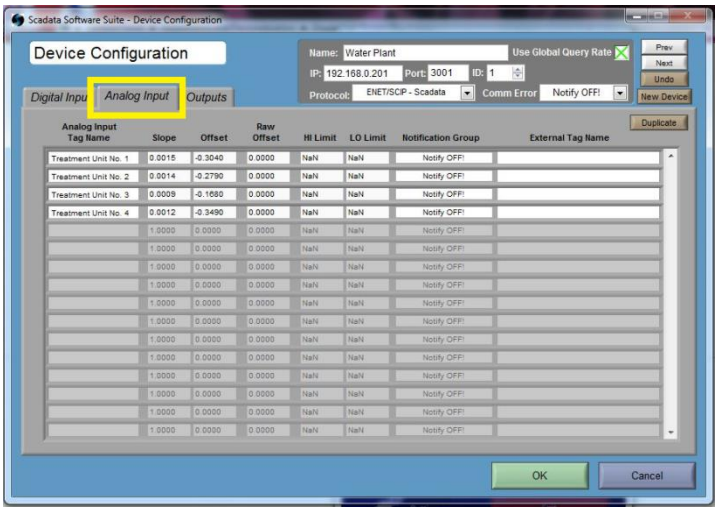

Figure 3-4 Analog Input

3.4 Analog Outputs (outputs are only used for controls)

There are Analog Output tags that can also be configured. As before, assign a unique tag name to the analog output. A slope and offset can also be added as required. The Default Value is used to set the analog output to a known value before any control settings are used for the output. (Figure 3-5)

3.5 Digital Output

Define a unique tag name for the Digital Output and configuration is complete. Check default box to force output "on" any time the software is communicating with the device. Use the scrollbar to go through the entire list of digital inputs for a given device.

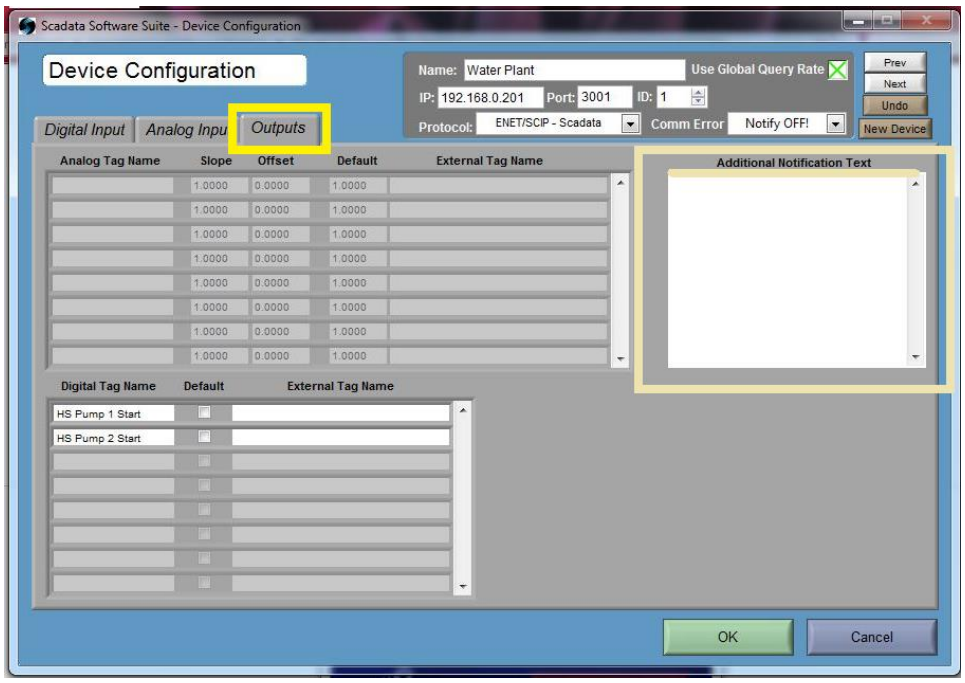

Figure 3-5 Device Configuration Outputs

3.5.1 Device Email Text (Additional Notification Text)

The Additional Notification Text is appended to email pages that are sent for tags in alarm from the device. (Section 10 Group Notification Configuration)

3.6 Editing a Device

To edit a device's tag values press the **Edit Selected Device** button or double click on the device in the device list which will open the **Device Configuration Screen** (Figure 3-1). To delete a device, select the device from the list and press the **Delete Selected Device**. The devices are queried in the order listed in the device list. The **Up** and **Down** buttons below the list can be used to change the order in which the devices are queried.

4 Tag Configuration

The **Tags** button is used to access the configuration to create, modify and delete tags within the software. Tags are software based IO points that can be created and used to reference existing physical IO points on remote devices or calculate values within the Scadata Software Suite. Tag examples would include Celsius to Fahrenheit temperature conversions, flow totalizers, Pump ON/OFF set points, etc.

4.1 Creating a New Tag

To Create a New Tag, press **New Tag** button above the Tag List. A blue line appears on the Tag List and you will enter a unique tag name in the Tag Name area and then select the type of tag by clicking the Type in the blue box. All tags can be used in any Control statement (Section 5 Control and event Setup-Controls Configuration) and the Value In Numeric and Value In Boolean (Figure 4-1) can be set to a value in the statement in much the same way as the analog and digital output values can be set. To delete a tag select the desired tag, this will highlight in blue, and click the **Delete Tag** button.

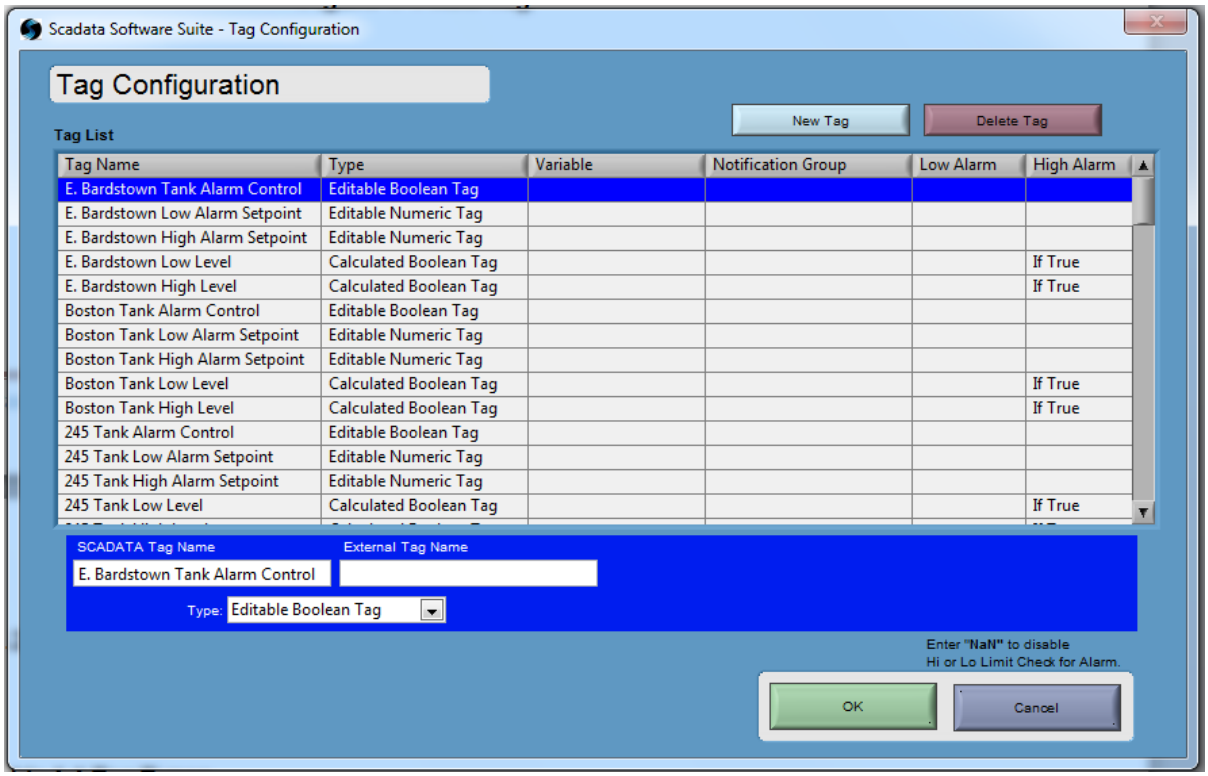

Figure 4-1 New Tag

4.2 Types of Tags

There are 10 unique types of tags that can be selected. The table below describes what each is used for and how to configure that tag.

Table 4-1 Tag Types

Type	Definition
Calculated Numeric Tag	The Value In – Num. is used to store a value computed by the Control or Calendar statements. A notification group can be assigned to be notified whenever the value falls outside of the Low and High Limits.
Calculated Boolean Tag	The Value In – Boolean is used to store a Boolean value computed by the Control or Calendar statements. A notification group can be assigned to be notified whenever the value is true.
Editable Numeric Tag	The Value Out – Num is used to provide the operator with updateable tag values that can be modified from the tag display screen. These tag values cannot be assigned a value in the Control or Calendar statements.
Editable Boolean Tag	The Value Out – Boolean is much the same as the Value Out – Num except that it is a Boolean value; 0 OR 1 (OFF/ON)
Average	Tracks/Calculates the average of the tag specified.
Totalizer	Computes the integrated value of the tag specified. The partial sum of the value is calculated by multiplying the current value by the amount of time since the last reading.
Maximum	Tracks/Calculates the Maximum value of the tag specified.
Minimum	Tracks/Calculates the Minimum value of the tag specified.
Hold	Stores the last value that exceeded the Hold Minimum.
Approx Flow	The diameter and time window must be specified so that the approximate flow is computed once per time window. Thus the smaller the window the more frequently the value is updated/calculated. Apprx. Flow = { (Tag Value at Time "B" – Tag Value at Time "A") * [7.48 * π * (Diameter/2)²] } / [(Time "A" - Time "B") / 60]

5 Control and event Setup-Controls Configuration

An Event is an equation that is evaluated. The Controls are an intricate procedure combining Comparative Operators to describe an event that can occur using the available tags on the network. When these events occur, output events will be activated. These output events are also configured in the Controls Configuration (Figure 5-1), by clicking the **controls** button, then on the *Control Statements* tab, click **Edit**. Controls execute in a top to bottom format. The first item in the list will be checked before the last item, therefore, the first item will execute if all conditions are met before the last item will execute, even if all the conditions are met for that one as well. The **Up** and **Down** button are used to reorder the items in the equation.

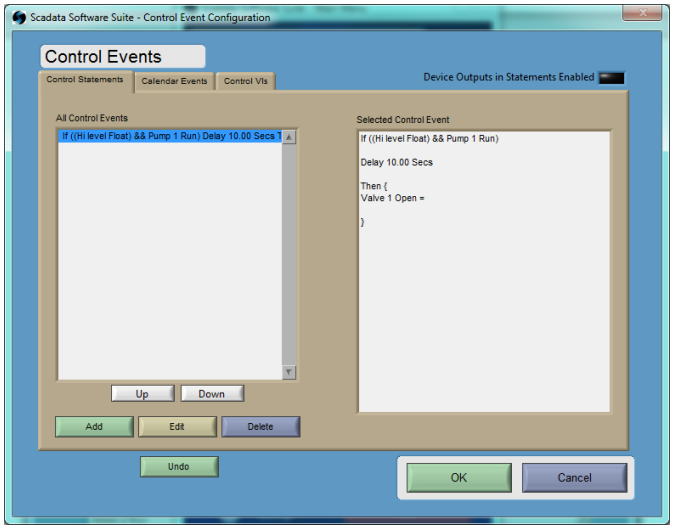

Figure 5-1 Control Events

Important If one of the events is changed it could interfere with remaining events outcome. There must be a reciprocating control statement to return the output to the original setting if the condition is false. (Ex. When hi-level float is True/on; Pump 1 turn on then the next event should be When hi-level float is False/off; Pump 1 turn off)

A Control Event consists of a Condition or an Event and an Output Statement. The data specified in the Condition is calculated. When the condition is True, the output(s) is set to the value specified. A delay (in seconds) can be specified, requiring the Event to be True for the desired delay before the output values are set. Once this delay time is passed, the outputs will be continually updated with the values specified.

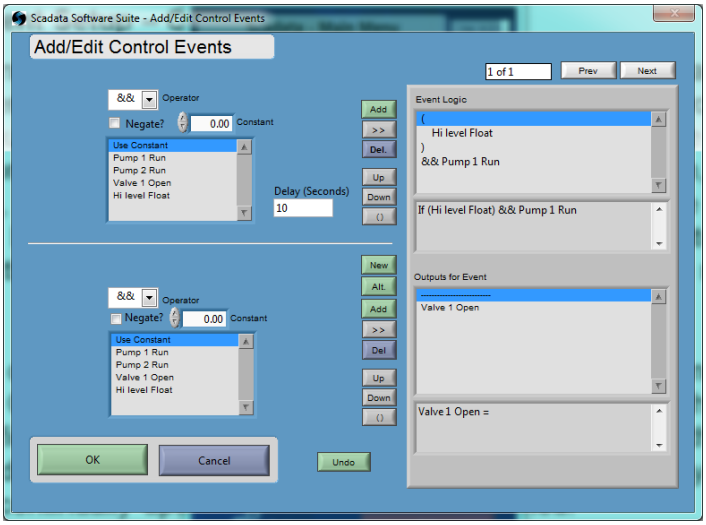

Figure 5-2 Add/Edit Control Events Tool

5.1 Editing the Event

When the result of this equation is True or Non-Zero, the outputs are assigned the specified value which was programmed. The List Box (listed twice on the left side of (Figure 5-2) provides a list of all of the tags for all devices defined. Selecting the tag and pressing the **Add** button adds the tag to the end of the Event list with the operator specified. When the **Use Constant** is selected from the tag list, a constant input control is displayed which can be used to specify a constant to be added to the Event equation.

Table 5-1 Edit Control Events Tools

Edit Buttons	Description
()	Inserts a pair of parenthesis into the equation; use up and down to change placement of the parenthesis. *Note: Deleting one parenthesis will automatically delete its corresponding parenthesis*
>>	Replaces the "*value and operator*" selected from the Event list with the value and operator specified.
Add	Adds the tag to the end of the Event list with the operator specified.
Del.	Removes the selected item from the Event list box from the Event equation.
Up & Down	Used to reorder the items in the equation
Alt.	Allows the control outputs to alternate. This function allows for the setting of one of a series of outputs. The first time the Event is True, the first output is assigned the value specified. The second time, the second output value is assigned the output value, etc…
Undo	Works only for the last action preformed within the Add/Edit Control Events Tool
☑ Negate?	This checkbox allows for the negation of the data statement
0.00 Constant	False or Zero
1.00 Constant	True or Non-Zero
New	Creates a new output tag/equation set in the output list. Each output tag/equation set in the list is separated with a line. All subsequent operations are done on a tag/equation set of which there can be more than one. Selecting an item from the output list will perform the function on that tag/equation set.

5.2 Editing the Outputs for Event

Each event statement can be used to set one or more output values. When the event specified is evaluated as True or Non-Zero, the outputs are assigned to the values specified. Each output assignment consists of an output tag (either analog or digital) along with an equation using operators from Table 5-2 Comparative Operators and Definitions whose result will be assigned to the tag specified.

To add an output assignment to the list, an output tag should be selected from the list of tags and once selected the press the **New** button. When the Use Constant is selected from the tag list, a constant input control is displayed which can be used to specify a constant to be added to the event equation. The Negate checkbox allows for the Boolean negation of the statement.

5.3 Altering the order of events

As stated previously, Control Events occur in a top down order, which makes the altering order of Events can be very important. Order of Events refers to the list of Events (Figure 5-1) Use the

Table 5-2 Comparative Operators and Definitions

Operator	Definition
>	Greater Than
&&	Logical AND
||	Logical OR
<	Less Than
!=	Not Equal To
==	Equal To
>=	Greater Than or Equal To
<=	Less Than or Equal To
+	Plus
--	Minus
*	Multiply
/	Divide
^	Exponent

5.4 Calendar Event Configuration

Calendar Events are output events that occur on a regular, scheduled basis. The Events are timed and occur for specified periods of time. To create and edit these Events, the Add/Edit Calendar Events tool (Figure 5-3) is used.

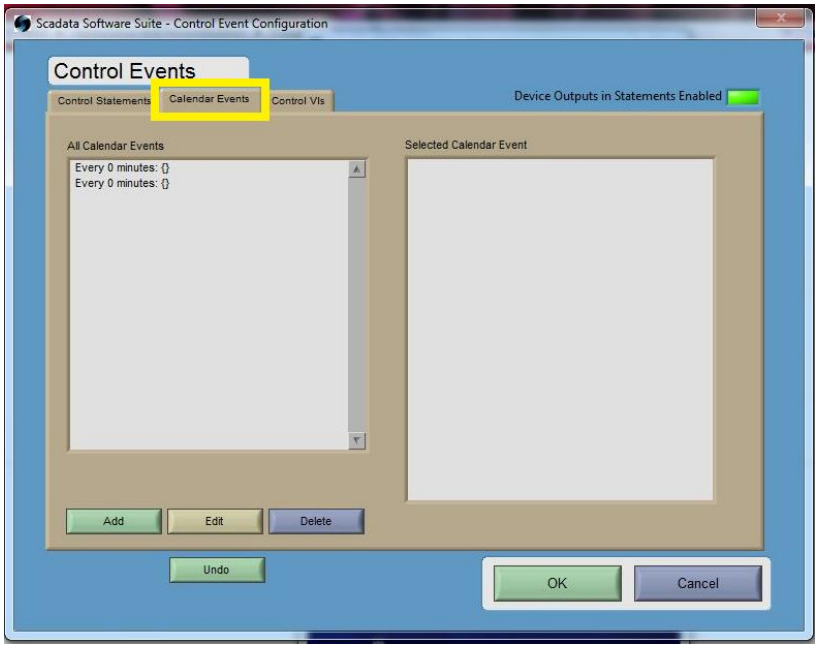

Figure 5-3 Calendar Event List

5.5 Creating a new Calendar Event

A **Calendar Event** allows for performance of a function at a timed interval. Use the Table 5-1 Edit Control Events Tools to add/edit/delete any Calendar Event. The Negate checkbox allows for the Boolean negation of the statement.

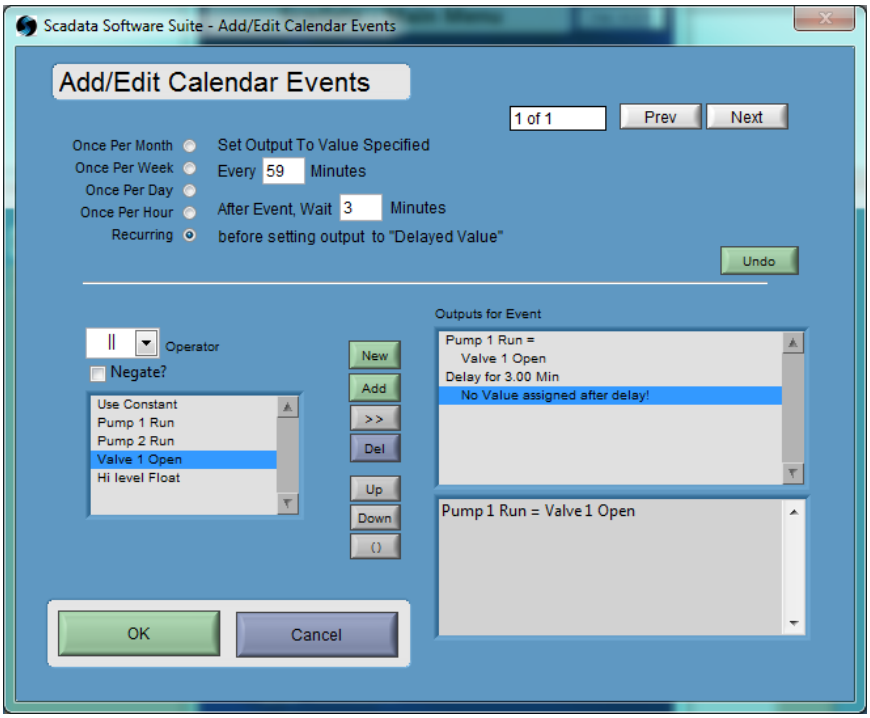

Figure 5-4 Add/Edit Calendar Events Tool

5.6 Control VIs

Custom Labview VI programming can be added to the Scadata Software Suite via the **Controls** button and Control VIs tab. Control VIs can be used instead of or in addition to the built in control events builder.
If the default installation path was used when installing the Scadata Software Suite Control VI files can be imported to the C:\Program Files (x86)\S3\Custom\Control VIs folder. In the Control VIs tab the Control VIs can be moved from the Available Control VIs window to the Enabled Control VIs, once added they will be activated to run in the Scadata Software Suite.

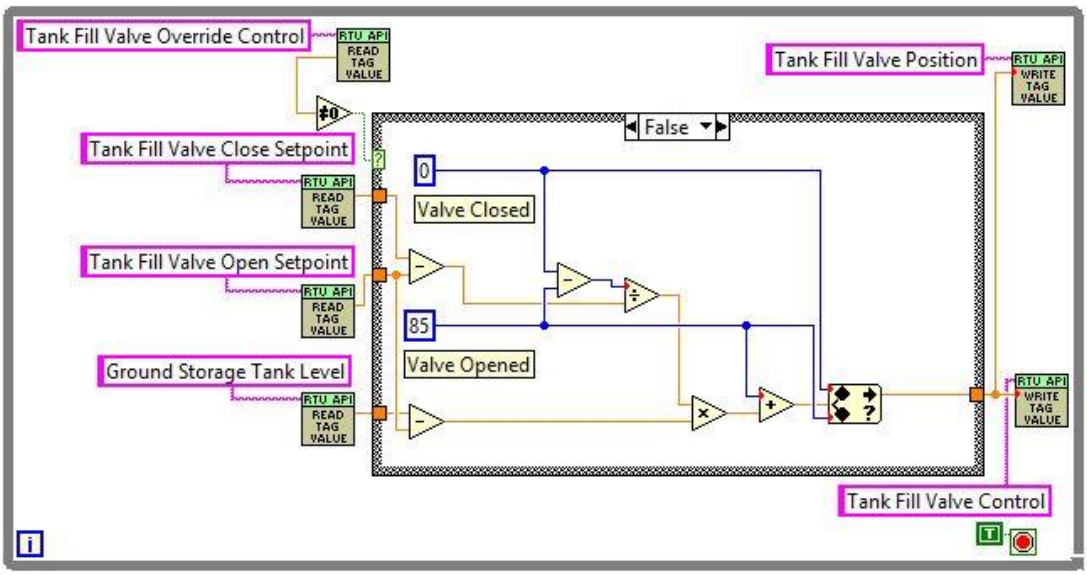

Figure 5-5 Control VI Example

6 Trending Configuration

Trending graphs are a collection of up to ten tags and the associated history data. See Section 16 for more detail on Trend Graphs. To configure these graphs, from the Main Menu (Figure 1-1) select the **Trending Configuration** button to open the Trending Graph Configuration (Figure 6-1) tool.

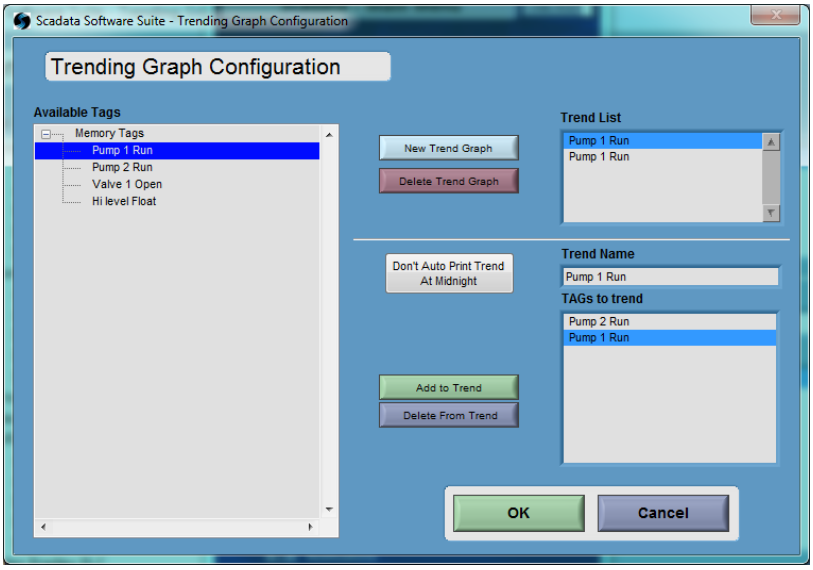

Figure 6-1 View Trending Graph Configuration Screen

6.1 Creating a New Trend

There are some functions that make the Trend Graph configuration easier. These are listed in Table 6-1 Trend and Report Tag Functions. To create a new trend graph press the **New Trend Graph** button and this will clear the Trend table and name. Enter a name in the white box above the Trend Table, it will then appear in the Trend List. Select a tag to add to the Trend table, press the **Add to Trend** button to put the tag to the table. To delete select a tag in the table and press the **Delete from Trend** button. To add more tags, repeat earlier steps. Checking the **Auto Print Trend** will cause the trend display to be printed automatically at midnight. To create another trend graph, repeat steps. When all trend configurations have been completed, press the **OK** button to save the configurations. Pressing **Cancel** will not save any trend configurations.

6.2 Editing an Existing Trend Graph

To edit an existing graph configuration, select the Trend in the Trend List. This will fill the table with the selected trends configuration. To edit, please refer to section 6.1.

6.3 Deleting an existing Trend Graph

To delete an existing graph configuration, select the Configuration in the Trend List and press **Delete Trend Graph**.

Table 6-1 Trend and Report Tag Functions

Button	Function
Show only tags for Selected Device	If this function is active, only tags for the select Device will be visible in the Available Device Tags on the Network list
Prepend Device Names	Prepends all tags with the associated device.
Don't Show Inputs	Shows only output tags.
Don't Show Outputs	Shows only input tags.

7 File Report Configuration

Reports are selected tags and historical data presented in a printable report format. The operator is able to manually print reports or schedule report generation. (Section 8). To configure a report, press the **File Report** button on the Main Menu (Figure 1-1). This will enable the File Report Configuration tool. There are also functions that simplifies report generation, these are listed in Table 6-1 Trend and Report Tag Functions

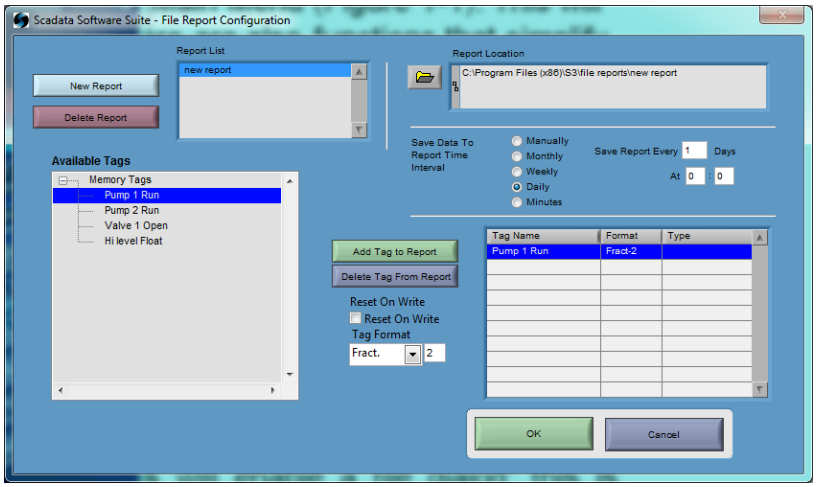

Figure 7-1 File Report Configuration Tool
"Generate File Report"

7.1 Create a New Report

To create a new report you must first press the New Report **button on the** File Report Configuration **tool. (Figure 7-1)This will enable a file dialog; this is where you name and save the report. After typing new name of the report press** Save **and the name will now appear in the** Report List**. You can set the report save in timed intervals by using the** Save Report Interval **control. Select a tag from the** Available Device **tags on** Network List**. By pressing the** Add to Report **button you will add the tag to the** Report Table**. Checking the *Reset on Write* checkbox <u>before</u> adding a tag causes the system to reset the value after the value is written to the report, this can be used to reset the runtime value, or any of the calculated memory tags. The tag format can be used to determine how the value is saved, the value can be written as either a fractional (e.g. 456.7) or a scientific (4.5E2) value with a desired number of digits of precision. The operator can delete a tag by selecting the tag and pressing the** Delete from Report **button.**

Once all editing and deleting has been completed, press the **OK** button to save the report configurations. The operator can create as many reports as required by simply repeating the steps.

7.2 Editing an Existing Report

To edit an existing report, select the report in the Report List column, this will fill the controls with the appropriate data for the selected report. Edit appropriately using the Add to Report and Delete from Report functions, as well as the Save interval options.

7.3 Deleting a Report

Select a report from the Report List. Press the **Delete Report** button to remove the report configuration from memory permanently.

8 Print Report

The Print Report screen is used to create and edit a printed report. The screen displays a list of reports that have been created. The properties for the selected report are then displayed to the right of the list. The report name, page layout, time the report is to be printed, and the items to include in the report can then be modified. To create a new report, press the **New Report** button, this creates a new report item. The name of the report is able to be changed, as is all of the other parameters of the report. When a report is created, it can also be printed directly from this screen by pressing the **Print Test Report** button. Press **OK** to save all changes and return to the Main Menu or press **Cancel** to <u>discard</u> all of the changes made.

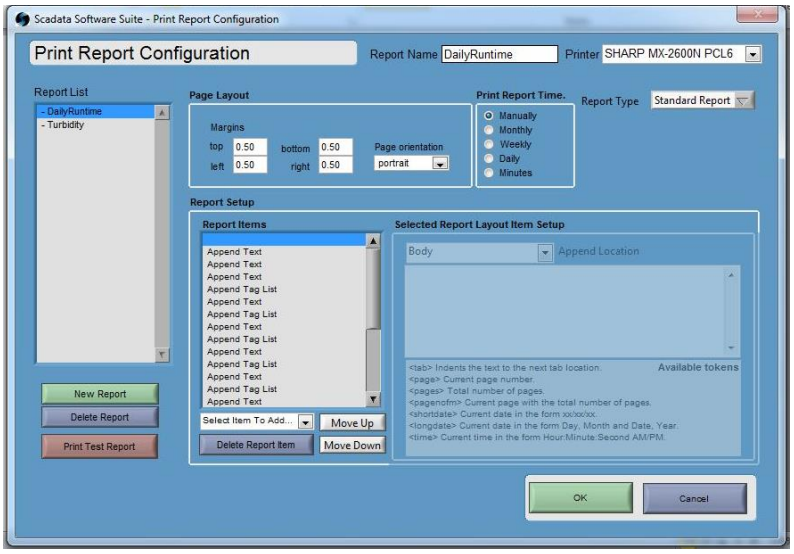

Figure 8-1 Print Report Generation Configuration Tool

"Generate File Report"

8.1 Page Layout

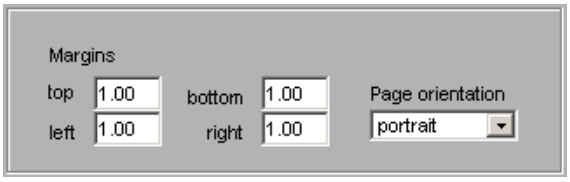

The Page Layout defines the margins of the printed report as well as the page orientation.

- **Margins:**
  The margins set the size of the page margins for the printed reports. If the **margins** are smaller than the minimum margins for the printer, the report will not print. All **margins** are defined in inches.

- **Page Orientation:**

  The page orientation defines how the report will appear when printed. **Portrait** will print the report width wise, **Landscape** will print the report length wise.

8.2 Print Report Time

Each report can be configured to print reports automatically by defining the Print Report Time. There are 5 different timing options that can be selected for each report that is created: **Manually**, **Monthly**, **Weekly**, **Daily**, **Minutes**.

- **Manually:**
  The **Manual** option defines that the report should not be printed automatically. Only when the report is selected from the **Print Report Selection Screen** is the report printed.

- **Monthly:**

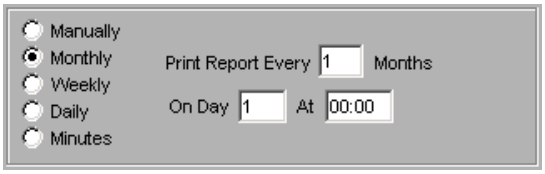

The **Monthly** option allows for the input of a specific time of day on a specific day of the month at which a report is to be printed. The time should be specified in a 24 hour time format. The option is also included to define a printing interval in months.

- **Weekly:**

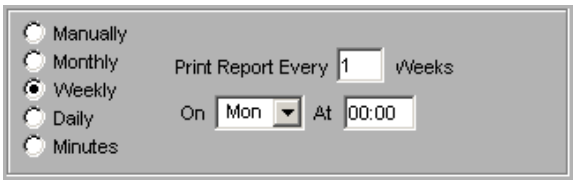

The **Weekly** option allows for the input of a specific time of day on a specific day of the week at which a report is to be printed. The time should be specified in a 24 hour time format. The option is also included to define a printing interval in weeks.

- **Daily:**

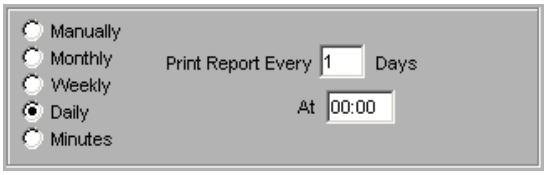

The **Daily** option allows for the input of a specific time of day at which a report is to be printed. The time should be specified in a 24 hour time format. The option is also included to define a printing interval in days.

- **Minutes:**

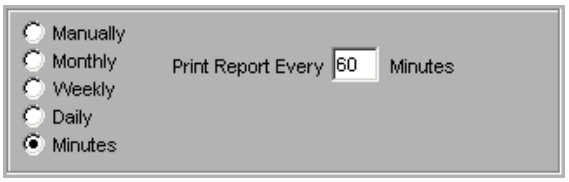

The **Minutes** option allows for the input of a printing interval defined in minutes. The first print time will always occur at midnight. All subsequent reports will be printed at the defined interval up to midnight. So for instance, if an interval of 90 minutes is defined, the report times for the day would be {12:00 am, 1:30 am, 3:00 am, 4:30 am, 9:00 pm, 10:30 pm}

8.3 Report Type

The Report Type option allows you to choose what type of report you would like to generate, the options include Word doc., Excel doc., HTML doc. or Standard Report which will generate a document formatted for use within the Scadata Software Suite.

8.4 Report Items

All the current items on the report are displayed in the Report Items list, to add more items select it from menu list below and it will be added to the Report Items list. To change order of the items use the **Up** and **Down** buttons until at the desired position, and to remove an unwanted item press the **Delete Item** button.

When an item is selected from the list the parameters for that item are displayed in the Selected Report Item Setup. The parameters can then be modified for the selected report item.

Set Font Style - Bold*:*

Determines whether subsequent text appears **bold** in the report. When this item is added or selected from the report item list, a check box is displayed to set the attribute.

☑ - True: Enables the bold attribute for all subsequent text.

☐ - False: Disables the bold attribute for all subsequent text.

Set Font Style - *Italic:*

Determines whether subsequent text appears *italic* in the report. When this item is added or selected from the report item list, a check box is displayed to set the attribute.

☑ - True: Enables the Italic attribute for all subsequent text.

☐ - False: Disables the Italic attribute for all subsequent text.

Set Font Style - Underline:

Determines whether subsequent text appears underlined in the report. When this item is added or selected from the report item list, a check box is displayed to set the attribute.

☑ - True: Enables the Underline attribute for all subsequent text.

☐ - False: Disables the Underline attribute for all subsequent text.

Set Font Style - Color:

Determines the color of subsequent text in the report. When this item is added or selected from the report item list, a color selection box is displayed to set the color attribute.

8.5 Set Font

Determines the font and font size of subsequent text in the report. Size is the point size.

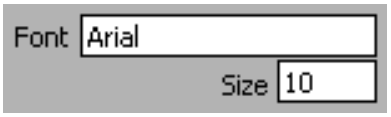

8.6 Append Text

The **Append Text** report item is used to insert text to the Report and the **Append Location** determines where in the report the text is added. Next type the text to be added into the text entry box which will allow for the entry of specific tokens to the text. These tokens are evaluated at the time the report is printed and replaced with the appropriate values. (Table 8-1)

- **Body**: The text is appended to the body of the report.
- **Header Left**: The text is appended to the left header of the report.
- **Header Center**: The text is appended to the center header of the report.
- **Header Right**: The text is appended to the right header of the report.
- **Footer Left**: The text is appended to the left footer of the report.
- **Footer Center**: The text is appended to the center footer of the report.
- **Footer Right**: The text is appended to the right footer of the report.

Tokens: determine whether subsequent text appears bold in the report. When this item is added or selected from the report item list, a check box is displayed to set the attribute. The following describes the tokens available

Table 8-1 Available Tokens

Token	Description
<tab>	For standard reports, LabVIEW indents the text to the next tab location. For HTML reports, LabVIEW interprets this token as .
<page>	Current page number. LabVIEW ignores this token for HTML reports.
<pages>	Total number of pages. LabVIEW ignores this token for HTML reports.
<pagenofm>	Current page number with the total number of pages in the report. LabVIEW ignores this token for HTML reports. Example: 7 of 30
<shortdate>	Current date in the form xx/xx/xx. Example: 10/5/98
<longdate>	Current date in the form Day, Month and Date, Year. The month, date, and year order defaults to the date settings of your operating system. Example: Monday, October 05, 1998
<time>	Current time in the form Hour: Minute: Second AM/PM. Defaults to the clock settings of your computer. Example: 1:58:22 PM

8.7 Append Table

The **Append Table** report item is used to insert a file report to the print report. The File name, the column width of the table and the space between rows can be specified. These options are meant to be used along with the file report options.

File Location: Specifies where the file is getting saved and file name of the report to be appended to the report. This can be a file that was created by the file report function.

Column Width: The size in inches of the table's columns which the reports will be added. If the data added to the table will not fit within the column width specified than the report will wrap that column to the next line.

Row Spaces: The space between the information printed in the table using empty rows.

Time (HH:MM): The report can be specified to print data within an entered time frame.

8.8 Append Image

The **Append Image** report item is used to insert an image to the print report from a file location.

8.9 Append Graph

The **Append Graph** report Item is used to plot tag values to the graph for a specific time. **Available Tags:** This tree listing displays all of the tags currently in the system. Simply press the **Add Selected Tag to Report** button to add the tag to the Selected Tag List. Using the up and down buttons changes the position of the tags and the delete button removes selected tag. Tags can be chosen and added to the list of tags to graph. The data from the history file is then read for each of the tags in the list, and plotted on a graph.

8.10 Append Tag List

The **Append Tag List** Report Item is used to add the current tag values to the print report. It will display both the current tag name followed by the value in a table. The Available Tags tree list display will show all of the tags currently defined in the system. Selected tags can be chosen from this and added to the list of tags to write to the report.

Tag Format: The Tag Format is used to change formats used when the tag value will be printed. The number next to the tag format is the number of digits of precision used when printing the value.

- SCI: Prints the value in scientific notation (e.g. 5.63E0).
- FRACT: Prints the value as a fractional number with the number of digits of precision (e.g. 5.63).
- (BOOL)EAN: Prints the value as either ON or OFF.
- RUN TIME: Prints the value as the number of hours and minutes that a runtime has been on (e.g. 54:30).

The options available for printing the list are the **Column Space Width** is the size in inches used to separate columns of tags and values (this value is only needed if the # of columns is more than one.), the **Name Width** which is the size in inches of the columns containing the tag names, the **Value Width** which is the size in inches of the columns containing the tag values, the **Row Spaces** which are the number of empty lines printed between each row in the table, The **# of Columns** which specifies the number of columns of tags to use when adding the table to the report (If two columns are specified, then there will be two columns of tag names and tag values), finally the Row or **Column Major** which

specifies the way in which tags are written to the report (if only one column is specified, this parameter will have no effect).
Row Major: The tags will be appended to the first column, when the first column is full, the next tags will be added to the second column. This will continue to the last column.
Columns Major: The tags will be appended to the first row, when the first row is full, the next tags will be added to the second row. This will continue to the last row.

8.11 Deleting Report Items

This button will delete the selected item from Report Items List.

8.12 Select Items to Add

This pull down menu list is used to select new report items to add to the report. When a new item is selected, that new item is inserted into the report item list below the currently selected item.

8.13 Rearranging Report Items

The move up and move down buttons will move the currently selected item up or down respectively in the Report Items List.

9 User Notification Configuration

The User Notification Configuration screen (Figure 9-1) allows for the addition and modification of the notification information for individual users in the system. The left side of the screen lists all of the users with their notification information as well as the time of the week during which they will be notified. Once a user is selected, the protocol that will be used as well as the access information for the protocol can be entered. The system uses the TAP-IXO, SNPP, and SMTP.

In addition to the notification access information, the time of day that a user will be notified can be specified. To add a time, enter the day of week and the start and stop time during that day (or specify every day, or all day). When an alarm group is notified, only users that are scheduled during the time of the notification will be sent information.

To temporarily disable notifications, the Notification Disabled checkbox can be checked to remove the user from all notification groups.

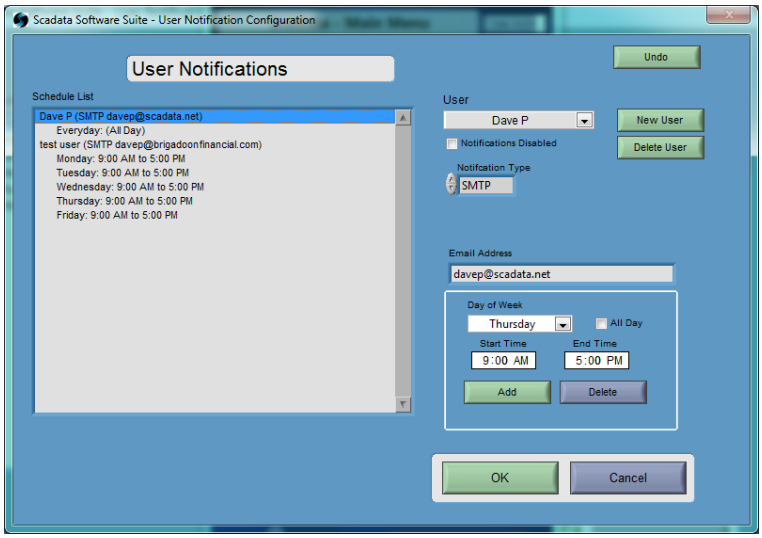

Figure 9-1 User Notification Configuration Screen

9.1 Notification Types

The system provides three types of notification: TAP-IXO, SNPP, and SMTP.

- **TAP-IXO**: This protocol dials through a modem to a server. Once connected to the server, a message is sent to a user defined by a **PIN**. The TAP Notification Number, data bits, parity and stop bits should be provided by the notification service along with the **PIN** number to identify the notification recipient. The com port to which the modem is connected should be configured in the **Notification** tab in the **System Configuration**.
- **SNPP**: The SNPP protocol connects to a server over the internet. Once connected to the server, a message is sent to a user defined by a **PIN**. The SNPP Server's DNS name or IP address along with the port should be provided by the notification service along with the **PIN** number to identify the recipient.
- **SMTP**: The SMTP protocol sends an email message to an email address. An SMTP server is required to send the message and should be supplied in the **Notification** tab in the **System Configuration**.

10 Group Notification Configuration

The Group Notification Configuration screen (Figure 10-1) allows for the addition and modification of notifying groups. Notification Groups are lists of users created in the Notification User Configuration screen that are assigned to tags. When a tag enters a state of alarm, all of the users in the group are notified according to the notification rules specified. The users are notified in the order that they are listed in the Users in group list box. The order can be changed by pressing the **Up** or **Down** buttons next to the list box.

From this screen groups can be created, deleted and modified. Selecting a group from the pull down list displays a list or users currently assigned to that group in the list box on the right, and a list of users not assigned to the group. Users can then be added or removed from the group by double clicking on the respective list box, or by pressing the Add or Remove button.

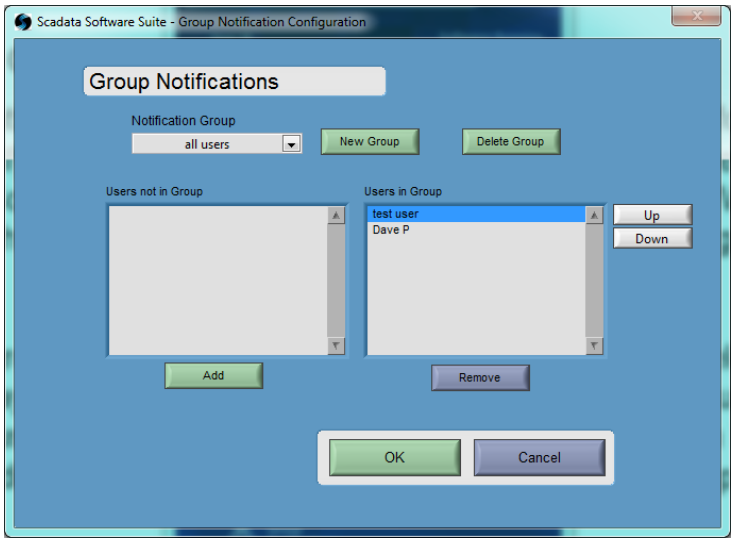

Figure 10-1 Group Notification Configuration Screen

11 Configuring the Software – "Settings"

Configuration can only be performed by a user with administrator or technician privileges or if an administrator has provided configuration privileges to an operator via user management, Section 2. Configuration can occur while the system is running, however any changes made will not take effect until the system is restarted.

11.1 Settings

The Settings menu is where you initially configure the software. Device querying, historical data logging, alarm bus port and RF communication port are all configured within the tabs on the Settings window.

11.2 Notification Configuration

This notification must be configured with every device that needs to obtain data. If you do not include a device in this System Configuration Setup, you will not receive updated information from that device.

11.3 Query Setup

To query a device means that the software will initiate communication with the device on a regular basis. If a device is not queried, the associated tags cannot be utilized in other monitor functions, such as Control or Report Configuration. Double click on device for device on network list to add to devices to query list. (Figure 11-1)

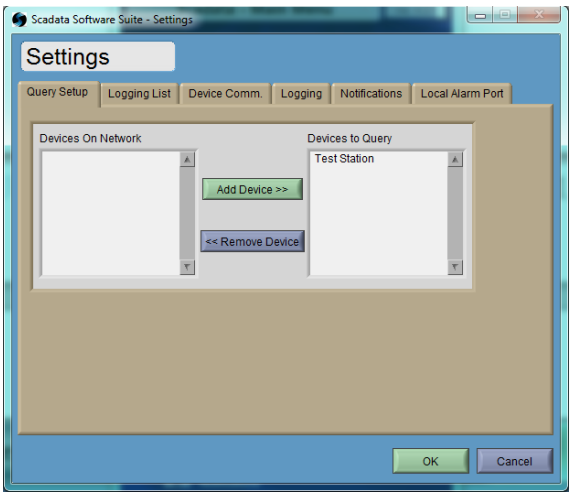

Figure 11-1 Settings: Query Setup

11.4 Logging List

Logging a device is performed the same way as querying a device. However, if the user wants to remove a device from the logging list, no checks are performed and the device is removed from the list (Figure 11-2).

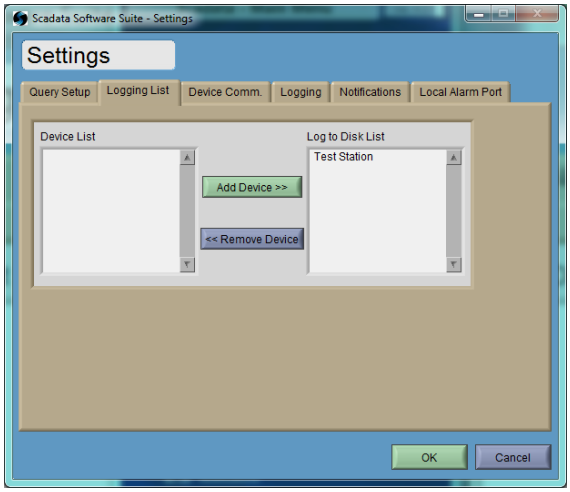

Figure 11-2 Settings: Logging List

11.5 **Device Comm**

The Device Communication is configured through the Device Comm tab. This specifies the serial port to which the device is connected and the baud serial port rate at which the device is set. In addition the querying options can be set to determine the interval between global device queries. (Figure 11-3).The Delay before notification input allows for the control of how long in minutes to wait before a communication alarm is sent when communication to a Device Fails. This is useful for intermittent communication errors. (This is a global setting)

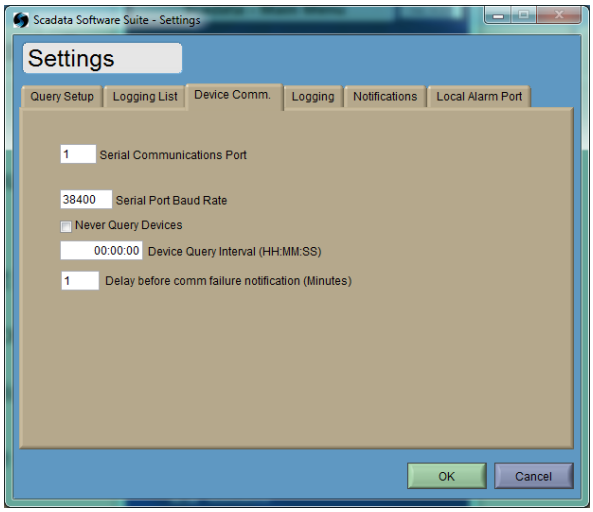

Figure 11-3 Settings: Device Comm

11.6 **Logging**

The Logging Settings are configured through the Logging tab. This specifies the interval (in hours:minutes:seconds) between when data is logged to disk. This logged data is used on trending graphs as well as viewing historical data.
'Enable DB Logging' is used to enable the logging of the historical data to a database. The ODBC Connection String is used to define the DSN for the database into which the data is to be inserted. The Table name defines the table in the database where the data will be stored. (Figure 11-4).

The Table in the database should have the following three fields the **Timestamp** which stores the time at which the data was logged, the **Tag** which stores the name of the tag, and the **Value** which stores the value of the tag. When database logging is enabled, all of the data from devices that are to be logged to disk will be logged to the database.

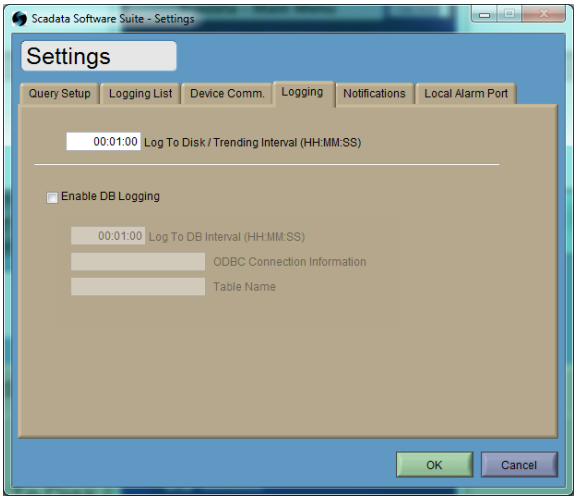

Figure 11-4 Settings: Logging

11.7 Notifications

The Notification settings are configured through the Notification tab.

TAP IXO Settings- This specifies the serial port to which the modem is connected. The modem is used to send messages to a Tap-IXO server.

SMTP Settings- This is used to define the SMTP mail server where mail will be sent. In addition it supplies a return address and subject for all emails sent.

11.7.1 Notification Options

The notification options can be set to determine when a notification is sent. A notification can be sent not only when an alarm occurs, but can also be sent to notify when an alarm ends and when an alarm is acknowledged.
A delay can be set to determine between notifying users in the group if the alarm is not acknowledged, and if the group should be notified if the alarm is not acknowledged (as well as the delay before the group should be notified).
The Delay between sending notifications is used to insert a delay between when notices are sent. (Figure 11-5)

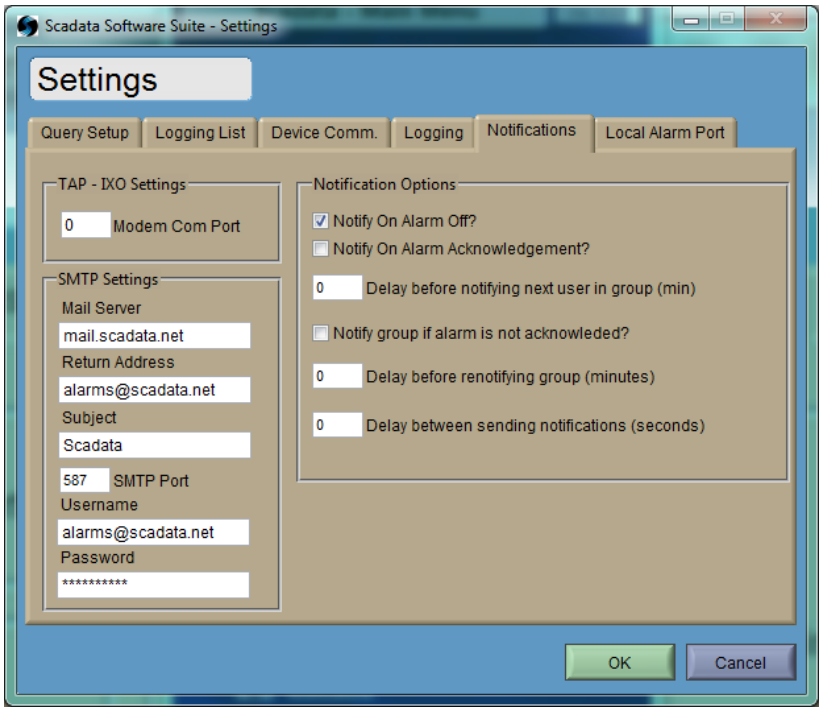

Figure 11-5 Settings: Notification

11.8 Local Alarm Port

This tab is used to set the properties for the local alarm port. The local alarm uses a serial port to control an external alarm device. (Figure 11-6).

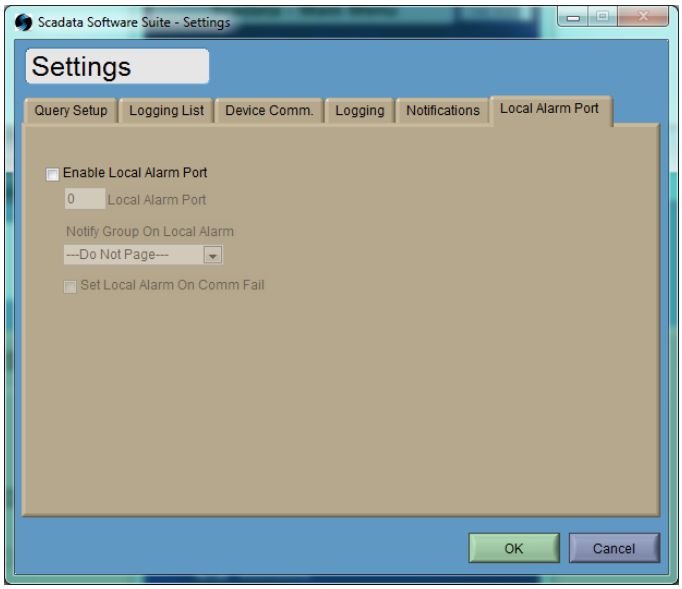

Figure 11-6 Settings: Local Alarm Port Tab

12 Help

Pressing the **Help** button will bring up the display of the Software User Manual to assist in configuring and using the Scadata Software Suite.

13 Viewing the Device Status Display

The Device Status Display (DSD) is the information register for the Scadata Software Suite. Information on any Device on the network that was set for querying can be found on the Device Status Display.

Figure 13-1 Device Status Display

The Device Status Display (DSD) is an intuitive interface for device monitoring, alarming and acknowledgement of alarms. There are several areas on the DSD that require explanation.

13.1 Devices on Network

The section, Devices on Network, consists of a list of all devices that have been designated for querying during configuration (Section 6 for device configuration) and the window has three active tables, The first is device name, which is the given name of the device. The second column “Comm”, is an indicator of communication with the device, (upon opening software, “comm” may say “not found” if communication is not possible). If communication is not possible, “unavailable” will be displayed in this column and only the last known data will be displayed in the “Selected Device” table. If communication is possible, “ok” will be visible in this cell. If communication has failed for longer than the “Delay before Notification” (configured in the Device Comm tab on the System Configuration screen) the duration of the communication failure is displayed. The third column, Alarm, provides a means to find devices that have active alarms. Text color provides information about the selected device. An explanation by color code is in Table 13-1. Device selection is performed by clicking on a device in the list. The information for that device will be displayed in the Selected Device Display.

Table 13-1 Color Designation Information

Color	Information
White	No alarms, Communication OK, Device available
Orange	Communication Unavailable, Alarm from last known data active on Device
Red	Alarm active on Device, Communication Available
Yellow	Communication Unavailable, no Alarm

13.2 Query Device

The devices in the Devices on Network list are queried according to the Device Query Interval (configured in the Device Comm tab on the System Configuration screen). Pressing the **Query Device** button will cause the selected device to be next to be queried.

13.3 Selected Device Display

The Selected Device display is a complete list of all tags available on the device selected. This table consists of five columns and the first column is the name of the tag, the second column is the current value of the tag, the third and fourth columns are high and low limits for the selected tags and the final column is the current alarm state, either Active or None. Once again, color provides information to the user in an efficient style. A legend next to the table provides explanation as to what each color represents.

Table 13-2 Color Representation Table

Color	Information
White	Normal, no alarms
Orange	Acknowledged Current Alarm
Red	Unacknowledged Current Alarm
Yellow	Unacknowledged Previous Alarm

Alarm acknowledgement is discussed in section 13.5.

The Last Queried indicator above the table displays the last time that the device was queried.

13.4 Device Alarm History

Device Alarm History provides a complete history of all alarms that have been active since the last "Apply Changes" was made on main menu. There are five columns of information provided to the user. The first column supplies the device name, the second supplies the tag that was or is in an alarm state. The third and fourth represent the start and stop times of the alarm and the final column is the time that the alarm was acknowledged. Color once again plays a role in this table as active alarms are designated red and inactive remain white. The green button, Clear Alarm History, will clear the current queue of historical alarm data.

13.5 Acknowledging Alarms and Resetting Runtimes

Alarms refer to tags that have exceeded limits set in the Device Configuration (3). When an alarm is active, the user is given the option of acknowledging that alarm. There are three ways to acknowledge alarms.

- The first is to press the **ALL** button and acknowledge every alarm for every device on the network.
- The second button, **Device**, will acknowledge all of the alarms for the device that is currently being displayed in the **Selected Device Table**.
- The final button, **Chan**, will acknowledge the alarm for the selected channel or tag in the **Selected Device Table**.

Once an alarm is acknowledged, it changes to an orange color.

Runtimes are any tags that increment time as it executes, calendar event or alarm driven means. These runtimes can be reset by the user by pressing one of three Reset Runtime buttons.

- The first, **All**, will reset all runtimes for every device and tag on the network.
- The second button, **Device**, will reset runtimes for the currently selected device.
- The final button, **Chan**, will reset the runtime for a selected channel on the Selected Device Table.

13.6 Digital Output Values

The Set Digital Output Values display is an instant means of changing the value of a digital output for a specific Device. When the Digital Output button is pressed on the Device Status Display, DSD; a new window will appear, (Figure 2-1).

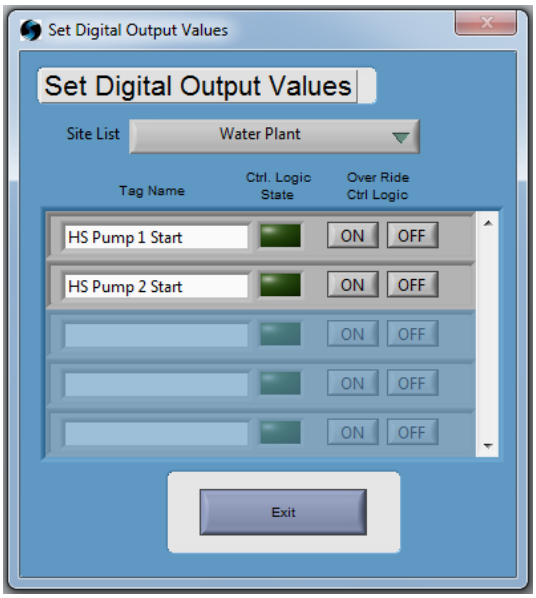

Figure 13-2 Set Digital Output Values

This screen supplies a device list pull down menu. All digital output channels for the selected device are then presented for adjustment. Once a device is selected, the current value of the digital output will be displayed to the right of the output. This value is only updated when the device is initially selected and will not change dynamically if the output is activated during **Control** or **Calendar Event** execution. To change the state of a digital output, simply press the button parallel to the output. When closing "Set Digital Output Values" window, manual override controls will no longer be active.

14 Viewing the Tag Display

The Tag Display is used to view and modify tag values.

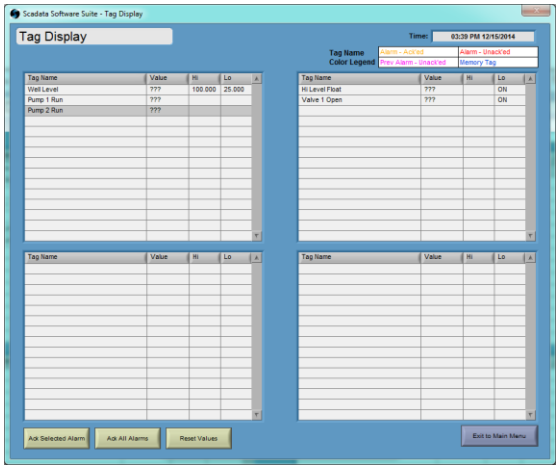

Figure 14-1 Tag Display

The tag display consists of four list tables that display the values of tags. To add a tag to view, simply click on one of the rows in the tag name column. An entry box will be displayed which allows an operator to scroll through a list of all of tag values in the system.

Any tag value which can be modified by the operator is shown in blue. To modify the tag value, simply click on the value. The tag value can then be modified. Once changed by the operator, the tag value will be sent to the system, and then the value will be updated in the list table. Individual tags can be reset, or an alarm can be acknowledged by selecting a tag and pressing the corresponding button on the bottom of the screen.

15 View Historical Data

A Historical Graph is a display of up to ten tags and the associated history files for those tags' values.

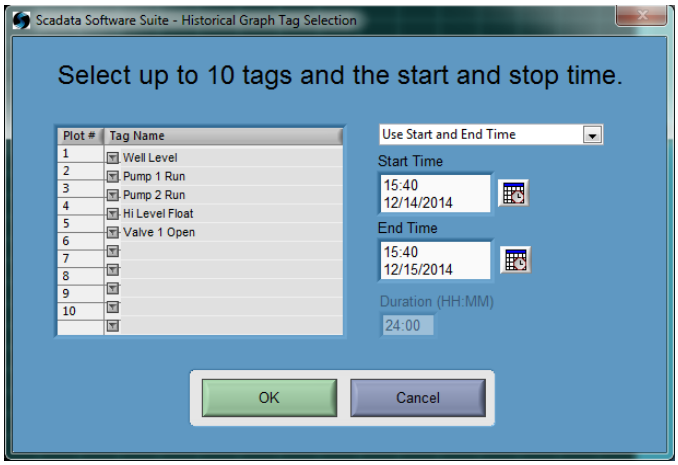

Figure 15-1 Historical Graph Tag Selection

To select the tags to display, press the **Read Historical Files** button to display the Historical Data Selection dialog, (this window automatically appears when choosing Historical Data icon from Main Menu). Once the tags to display are selected, the values are read from the historical data and plotted on the graphs. Press the **Print Graph** button for a print out of the graph. The amount of data to be shown on the graph is selected in one of three ways.

- **Use Start and End Time**: Select the start and end time for the data that is to be displayed on the graph.
- **Use Start Time and Duration**: Select the start time and the amount of time following it that will be displayed on the graph.
- **Use End Time and Duration**: Select the end time and the amount of time preceding it that will be displayed on the graph.

16 Trending Graphs

A trend graph is a collection of any ten tags and its associated history files. Trend graphs are configured by an administrator or a technician using the Trending Configuration Tool or clicking Edit Trends button on Trending Graphs window. *(Please refer to Section 8 for more information about trend graph configuration.)* Once the **View Trend Graphs** button is pressed, the Trend Graph Display will appear as seen in (Figure 16-3).

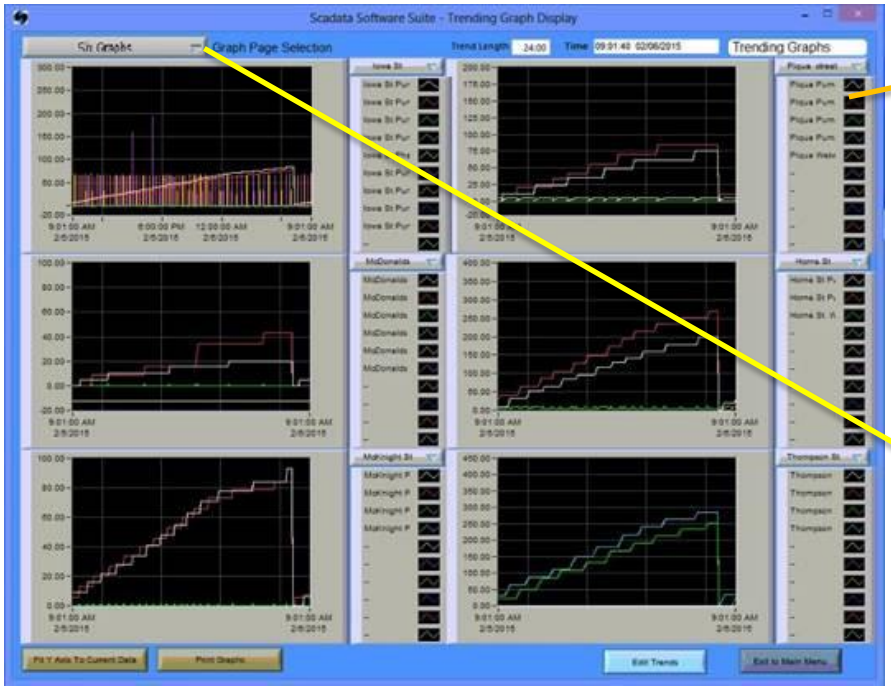

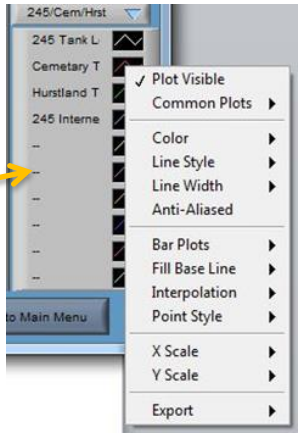

Figure 16-1 Trending Graph Options

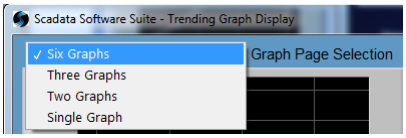

Figure 16-2 Trending Graph Selection

Figure 16-3 Trending Graph Display (Six visible trends)

To select a graph to display, each graph has a pull down menu above the legend to the right of the graph (Figure 16-1). This pull down menu will contain a list of all pre-configured trends available to the operator. Selecting a trend will alter the legend to reflect the tags of that trend configuration. The graph will then update with the historical values for those tags and update with current values as well.

The display also consists of a tab control that allows the user to select from four different viewing modes with 1, 2, 3 or 6 graphs per page for tend selection. (Figure 16-2)

17 Create File Report

A file report consists of predefined collection of tags that are written to a text file. The operator can generate a report previously configured. As seen in Figure 17-1, all available reports are listed in the box. The user simply selects the report to generate and press the Write Current Values to Report button.

Figure 17-1 File Report Selection Screen

18 Printed Report

A printed report is a predefined collection of tags and the historical data files associated with them combined into a printed format. Reports are configured by the administrator or technician while the system is inactive. The operator can generate a report previously configured. As seen in Figure 17-1, all available reports are listed in the box. The user simply selects the report to generate and selects the Print New Report button. A report will then be sent to the default printer for the System Configuration.

If the report is archived when printed, the reports are saved to the computer when printed. Pressing the **Print Archived Report** button will display a dialog box which can be used to select one of these archived report files to send to the printer.

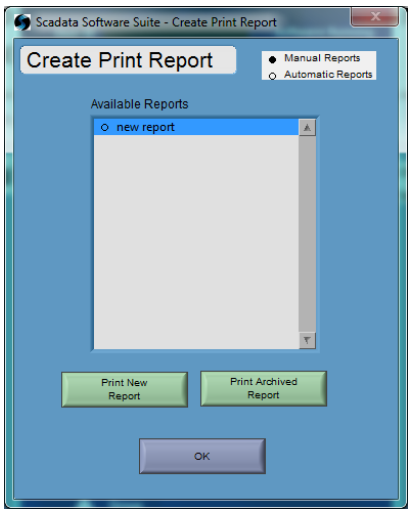

Figure 18-1 Print Report

19 Custom Screens

There are different custom screens provided in the Scadata Software Suite. The Weather Station screen shown (Figure 19-1) consists of indicators that are specific to weather stations; these include barometric pressure, wind speed, rainfall and humidity. There is also the Water Treatment System screen shown (Figure 19-2) consists of pump stations with status of pump station and water towers with towers water levels displayed.

(*Contact Scadata for more information*)

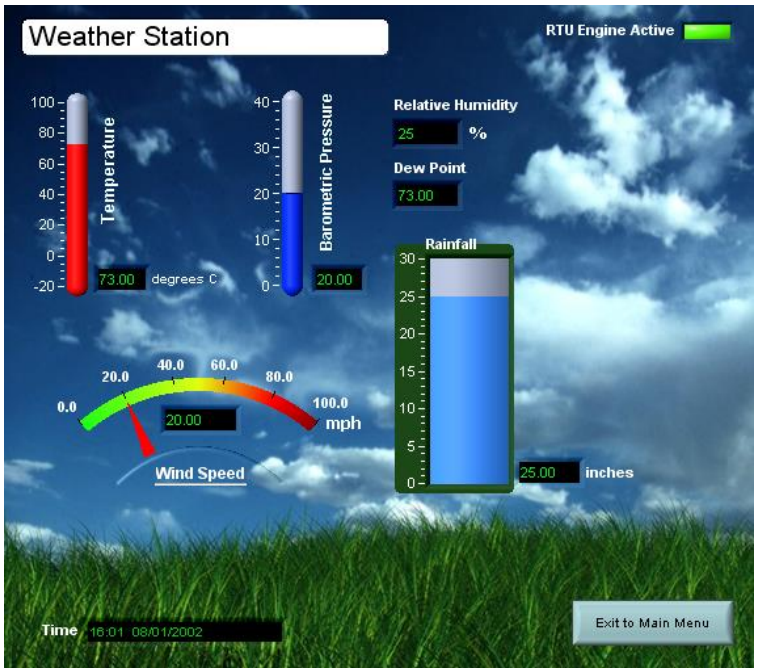

Figure 19-1 Weather Station Custom Screen

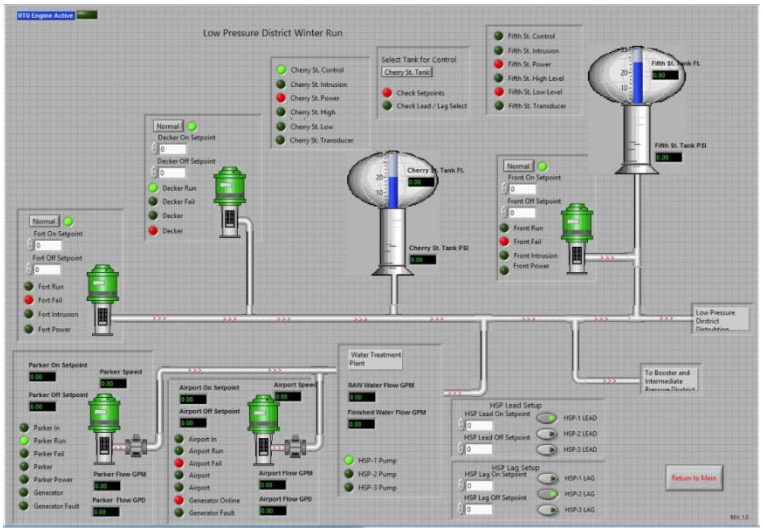

Figure 19-2 Water Treatment System Custom Screen

20 Exiting the Scadata Software Suite

To exit the Device monitor, press the **Exit** button on the MAIN MENU (Scadata Main Menu for Administrators). This will logout the user, exit the software and stop all communication with the Device network.

Notes

ATTACHMENT Y

CAMERA TRUCK O&M MANUAL

January 2022

"The Standard of the Industry"

CUES®

MULTI-CONDUCTOR TV INSPECTION SYSTEM

OPERATION & MAINTENANCE MANUAL

P/N 960950, REVISION: 1

TABLE OF CONTENTS

CHAPTER 6 - Pipeline Inspection

Pre-inspection Test 18
Downhole Setup 18
Insertion Into the Pipeline 18
Transporter Operations 18
Televising the Sewer Line 19
Equipment Maintenance 22

CHAPTER 7 - Troubleshooting

Introduction to Troubleshooting 24

CHAPTER 8 - Wiring Diagrams

Wiring Diagram, K2, MD680 26
Wiring Diagram, DUC, Basic 27
Wiring Diagram, Sys Select, TR1918-INST 28
Cable Assembly, K2 CCU > Reel Controller, MD337 29
Cable Assembly, K2 CCU > PCU, MD336 30
Cable Assembly, K2 / PCU Term Strip, TR1342 30
Cable Assembly, Steerable, Term Strip / Interface Panel, TR1344 32
Cable Assembly, Interface Panel / Slipring, Evolution Series, TR1343 34
Repair Instruction Sheet, Truck, 12-Pin, RP124-INST 35
Cable Assembly, M/C, 12-Pin, Platinum Cable, WM305 37
Cable Assembly, M/C 11 Conductor with 12 Pin, 0305490 38

APPENDICES

Record of Revisions 39
Warranty Information 40
CUES Material Return Policy 41
CUES Parts & Service 43

"The Standard of the Industry"

ADDITIONAL SAFETY PRECAUTIONS

Precautions must always be taken when operating electronic equipment. Exposed wires, damaged equipment, or improper operation can lead to a dangerous situation.

Please take a few minutes and read this entire manual prior to operating the equipment. Follow all safety procedures and thoroughly inspect equipment prior to use each day. This will help the equipment retain it's full value and will reduce the risk of injury, property, and/or equipment damage.

CAUTION

- Read the entire manual before attempting to connect or operate any equipment.
- Connect and disconnect cables only when the electric power is turned OFF.
- Never remove protection covers from the equipment or power generator. Internal repairs should only be done by an authorized CUES technician.
- Always startup and operate a generator in an open area.
- Upon receipt of the equipment, check for visible damage. If there is any evidence of rough handling, if damage is found, or if any equipment is missing, please contact the CUES Customer Service at 1-800-327-7791.

PERSONAL SAFETY EQUIPMENT

CUES stresses the use of appropriate safety equipment during system operations. Recommended minimum safety equipment includes, but is not limited to the following:

Safety Goggles
Work Gloves
Steel Toe Boots
Hard Hats
Flashlights
Safety Lines
Gas Detectors
Respirator
First Aid Kit
Ventilating Fans

CUES ® makes no warranty for the use of its products and assumes no responsibility for any errors or omissions in this document or for incidental or consequential damages resulting from misuse of the products.

"The Standard of the Industry"

MULTI-CONDUCTOR
CCTV Inspection System

CUES uses proven video technology to provide a versatile tool for viewing and recording sewer / storm pipeline inspections. This manual describes set-up, operation, troubleshooting, and maintenance instructions for CUES multi-conductor K2 Summit systems. Please be sure to read all instructions prior to operating the system.

The CUES multi-conductor system can be configured to perform the following (depending on the equipment available with your specific system):

- Operate on 0 - 4000 feet of multi-conductor cable.
- Inspect pipelines from 6 inch and larger in diameter.
- Record, digitize and store single frames of video images and 'real time' live video as well as collect, store and print pipeline inspection data for display and report generation.
- Record voice (audio) information and observations on videotape during TV inspections.
- Display footage, date, and time information on both the monitor and videotape during TV inspections.
- Enter and display pre-defined or free-format text observations on the monitor and video tape during TV inspections.
- Perform these inspections at remote sites using power supplied from a vehicle-mounted generator.

The CUES multi-conductor system has a number of separate, important components. If you recently purchased a CUES multi-conductor TV truck or if your existing TV truck has been retrofitted, become familiar with all of the components in this section before performing any inspection.

OPERATOR CONSOLE - The operator console is the center of the video inspection operation. Once the CCTV inspection equipment is placed in the pipeline, the entire inspection is operated from this console. CUES offers different configurations of operator consoles. The control console configuration, shown below, is the CUES Evolution Series.

The operator console includes a control panel. The control panel is actually separate components bolted into a rack mount. The location of each panel will differ depending on your particular truck configuration and some of the equipment in this section may or may not be part of your system.

GRANITE XP SOFTWARE - CUES offers Granite XP data collection and asset management software to record information about specific locations, problems, and observations (a Granite XP screen shot is shown below). For systems that include Granite XP software, please refer to the Granite XP user manual prior to use.

VIDEO MONITOR - The camera picture, pipeline, and inspection information is displayed on the video monitor. The location of each monitor will differ depending on the type/configuration of your specific truck. Refer to the monitor manufacturer's specific user manual for operating instructions.

DVD - CUES inspection trucks include a commercial DVD recorder. The location of DVD recorder will differ depending on the type/configuration of your specific truck. The controls for RECORD, PLAY, and FAST FORWARD/REWIND are similar to those found on any standard DVD recorder.

Operator Control Console

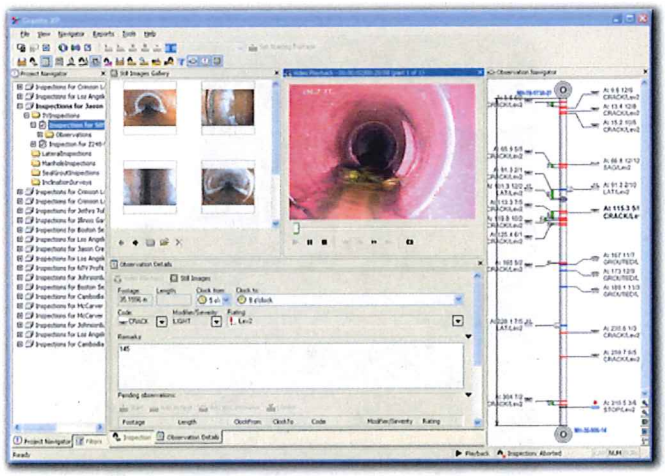

Granite XP Screen Shot

MANHOLE GEAR -

The manhole gear is stored in the rear of the vehicle and, after proper set up, is used to guide and protect the TV cable through the pipeline.

- Top-Hole Roller Assembly - The tophole roller assembly is positioned over the local manhole and uses pulleys to guide the TV/winch cables into the invert.

- Invert Roller Assembly - The invert roller assembly is positioned in the invert at the mouth of the pipeline and protects the TV/winch cables against damage and snags from the lip of the pipeline/invert interface.

- Quick-lock Extension Poles - The poles are used to lower the roller assembly into the invert and position it at the mouth of the pipe. If necessary, additional poles can be added to one another to provide a longer reach.

- Manhole Adapter Hook - The manhole adapter hook slides over the quick-lock extension poles, down to the lip of the manhole and is tightened to secure the invert roller assembly in place.

- Power Winch (for Grout/Cutter systems)- The power winch is positioned over top of the remote manhole. Cable from the winch is threaded through the roller assemblies and pipeline to connect to the camera rig at the local manhole. Operating the power winch from the center controller panel moves the camera rig forward.

- Power Cord and Reel (for Grout/Cutter systems) - Five hundred feet of power cord is wound on the power cord reel. The reel mates to brackets at the rear of the vehicle to allow easy dispersion of the cord from the vehicle to the power winch at the remote manhole.

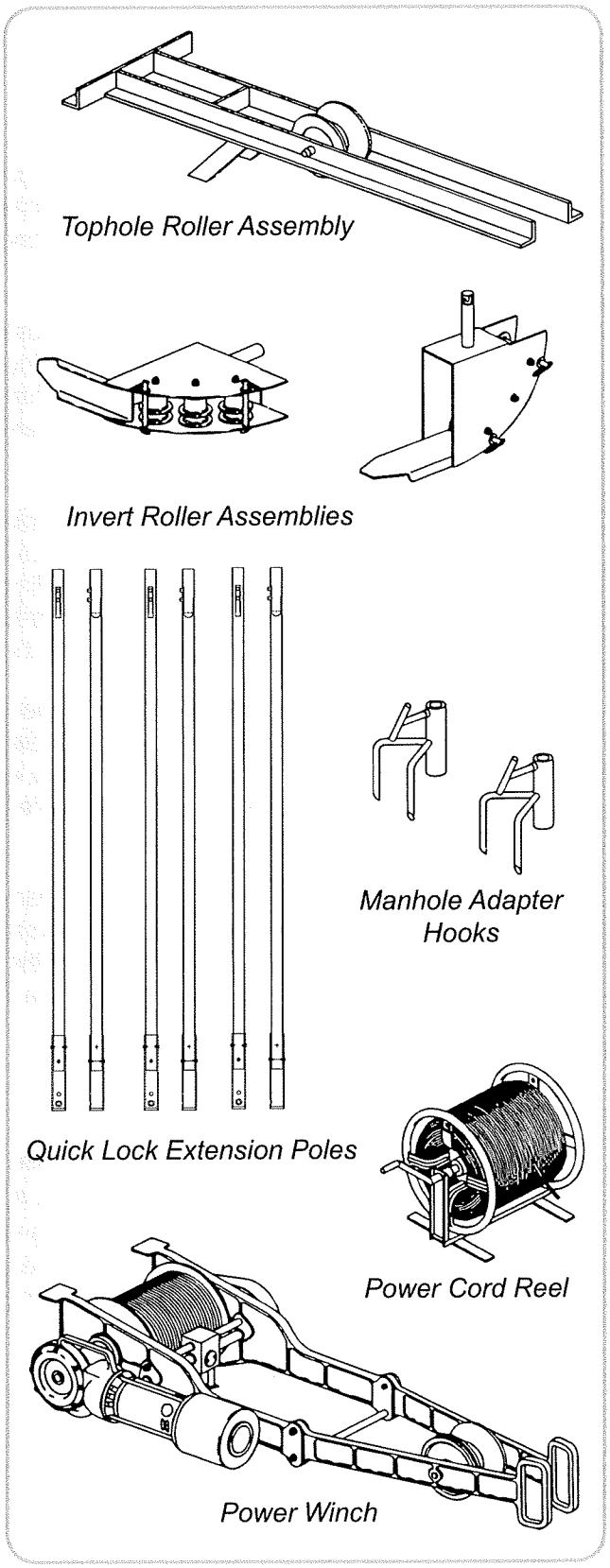

Downhole Gear

OPTIONAL EQUIPMENT -

CUES offers a variety of options to help expand the role of your multi-conductor TV inspection system. Please visit our website to view all available camera options.

CAMERAS - (optional equipment)

CUES multi-conductor cameras are designed to provide high quality pictures within varying pipe sizes and conditions.

- The CUES Digital Universal Camera (DUC) is a semi-autonomous, high resolution digital CCTV side scanning camera designed for rapid and detailed condition assessment of your wastewater system. You can inspect and assess 5000 feet or more per day, increasing your revenue, while reducing your expenses. The system can be packaged for off-road applications to minimize the costs of traffic control.

- The OZIII optical zoom pan-and-tilt camera system offers built-in directional field replaceable lighting for 6" to 48" pipe to produce the highest quality image to enhance the details of your CCTV inspection. The camera is also able to provide adequate lighting for 48" and larger diameter pipe with the addition of external lights. The OZIII camera provides up to 40:1 optical/digital zoom, automatic focus, remote focus and iris control to assure the best quality video within varying pipe conditions.

- The OZII optical zoom pan-and-tilt camera system is designed for use in 6" diameter relined pipe and larger and offers unparalleled imaging technology with a 10X optical zoom ratio plus a 4X digital zoom (an effective zoom ratio of 40:1). The OZII includes optical/digital zoom, automatic focus, remote focus, and iris control to provide quality pictures within varying pipe conditions.

SKID ASSEMBLIES - (optional equipment for Laser, Grout, Cutter, and Sonar units)

Optional skid assemblies are available to suit your inspection needs. Each skid assembly is specifically designed to protect your camera and lighthead from offsets and inline obstructions.

- **6 inch Skid Assembly -** This skid assembly uses two clamp-on, low profile sleds that fit over either end of the camera body.

- **8 - 30 inch Skid Assembly -** This Skid Assembly uses spacer plates to adapt the skid assembly to larger diameter pipes. The spacer plates attach the bottom skid runners to the yoke and are adjustable without having to remove the camera from the yoke assembly.

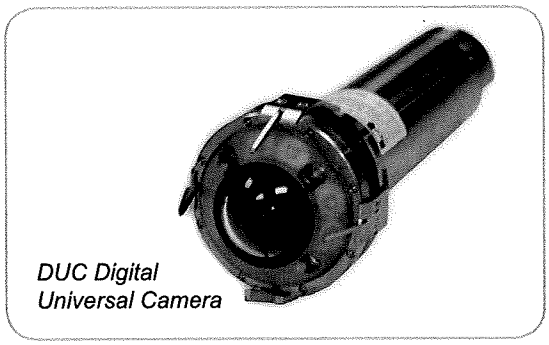

DUC Digital Universal Camera

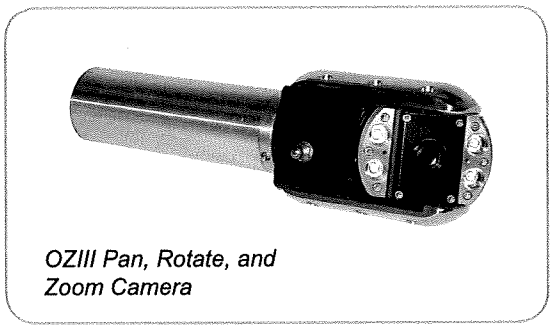

OZIII Pan, Rotate, and Zoom Camera

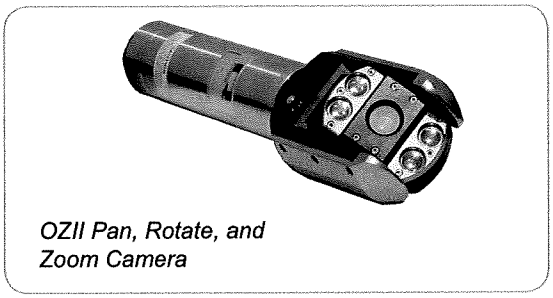

OZII Pan, Rotate, and Zoom Camera

CUES Cameras

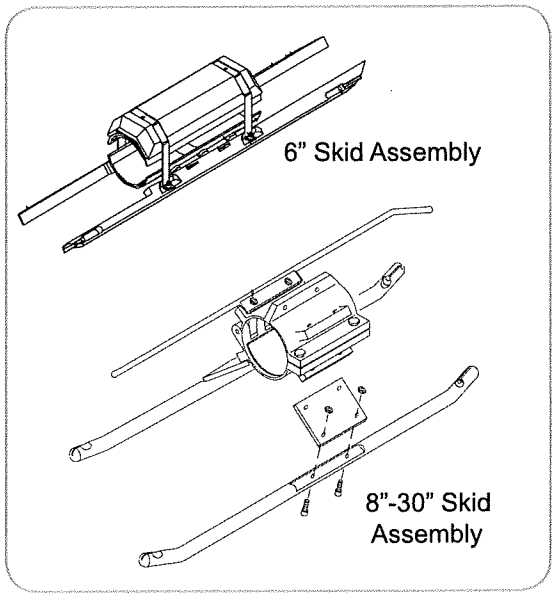

Optional Skid Assemblies

CUES MOBILE DATA ACQUISITION LAB

PRE-INSPECTION REEL AND CAMERA

WARNING! NEVER PLUG THE 12 PIN PIGTAIL INTO THE CAMERA WITH POWER GOING TO THE PIGTAIL. THIS WILL DAMAGE THE CAMERA MODULE.

1. Power on the K2 Summit CCU.
2. Power on the front and rear monitors.
3. Configure the equipment:
   - Select transporter.
   - Select front viewing camera (OZIII).
   - Verify rear viewing camera is "NO".
   - Select lights (internal incandescent).
   - Select configuration correct "YES".
   - Press ENTER.
4. Power on the wireless remote controller.
5. Run the diagnostics on camera:
   - Observe camera info on display monitor.
6. Place the camera on blocks to test:
   - Test forward and reverse.
   - For Steerable Pipe Ranger, test steering.
   - Camera pan and tilt.
   - Camera lights.
7. Verify that the strain relief is properly set:
   - Pull two cables to verify they are tight and the pigtail has slack.

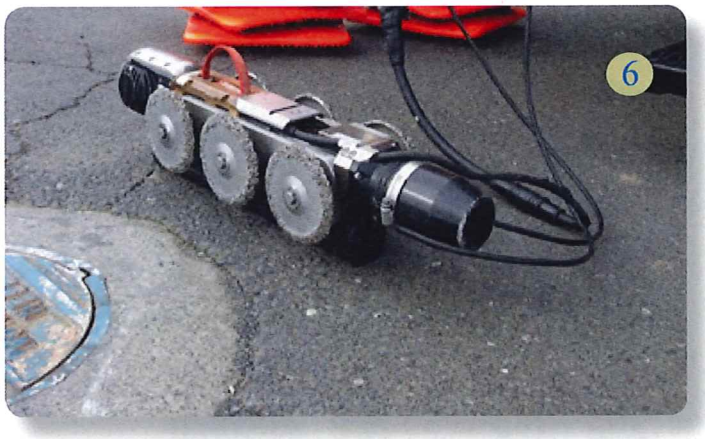

This page intentionally left blank.

LOCAL MANHOLE PREPARATION:

When the truck is in position:

1. Turn OFF the engine.
2. Set the parking brake.
3. Position additional safety cones, signs, and flag men, if necessary.
4. Start the vehicle mounted generator by pushing the generator switch on the generator control center to the start position until the generator is operating. If using a portable generator, refer to the owner's manual for the specific model supplied with your equipment. DO NOT power up any other electrical equipment at this time.

   NOTE: When using a portable generator, always set it in an open, well ventilated area away from the open manhole.

   Now pull the local manhole cover and ventilate the invert. Set out appropriate gas detection equipment to ensure the safety of crew members in and around the local manhole invert.

   NOTE: CUES is not responsible for confined space entry training. Always follow your organization's guidelines for confined space entry.

LOCAL MANHOLE SET UP (manhole near TV unit):

At the operator console or TV cable reel and transmission, set the transmission lever to N (neutral). Pull the locking pin and unfold the footage head arm located on the TV cable reel transmission. Have a local crewmember pull about ten (10) to (15) feet of cable off the TV cable reel. Lift the camera rig out of the truck and lay it next to the local manhole.

Connect the camera to the steel tow cable (from the remote manhole) and the TV cable from the TV cable reel. Refer to the following procedure for more information.

LIGHTHEAD CONNECTIONS

Attach an optional external lighthead for extra lighting in large pipes, if necessary. For additional information, refer to the user manual for your specific transporter for lighthead connection information.

CONTROLLER CONNECTIONS

Depending on the specific TV system, the stand-alone or desktop transporter controller should already be connected. NOTE: Ensure that the controller is connected and perform a functional checkout before placing the transporter in the pipe!

TV CABLE CONNECTIONS

Next place transporter and camera on the ground about 5 feet from the back of the truck. Pull some TV cable off the reel at the rear of the truck and connect the TV cable to the transporter and camera.

- If using a "trac" transporter, attach the 5-pin to the camera and the 4-pin to the transporter.
- If using a Mudmaster or Pipe Ranger transporter, attach the 12-pin to the transporter (or 12 to 5/4 adapter depending on your specific equipment/system).

IMPORTANT! When attaching the cable to the transporters and camera, visually inspect the cables to make sure the pins are straight and not bent before pushing them together. Also make sure the pins and/or holes do not contain any dirt or corrosion. Be sure to push the cables together straight on! DO NOT WIGGLE BACK AND FORTH!

TOW CABLE CONNECTIONS

Attach the tow cables and ensure that the TV cable has at least three or four inches of slack when the tow cables are taut. Once the cable is attached, it may be necessary to adjust your strain relief. Set the clam shell that's located on the cable back far enough to ensure the strain is on those cables and not on the TV cable itself.

TELEVISING THE SEWER LINE

The following steps are provided as an example only and may not represent your vehicle configuration. Always refer to the individual user manuals for your specific system.

1. Connect the quick release hook to crane hook.
2. Lower the winch cable to the transporter.
3. Connect the quick release to the lifting strap.
4. Lift and position the camera over the manhole.
5. Lower the camera into the manhole.
6. Pull the quick release line to release the hook.
7. Raise the winch cable.
   - Store out of the way.
8. Turn on the camera lights.
9. Drive the camera into the line until the strain relief enters the line.
10. Install the shoe.
    - Verify the pins are in place.

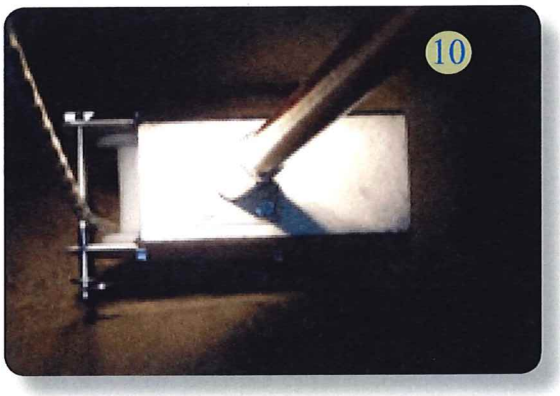

21. Set the IRIS and save it in the home position.
    - Home position on controller
    - Press and hold IRIS and +/-, as applicable
    - Press Home to save
22. TV the line.
23. Drive back 3 – 4" to place transporter in free wheel.
24. Place the reel in gear.
25. Retrieve the transporter with the cable winch.
26 Stop short of the preset distance.
27. Remove the manhole roller.
28. Remove the claw.
29. Remove the shoe and detach the cable from the shoe.
30. Drive the transporter back as the attendant takes up the slack.
31. Lower the winch to the transporter.
32. Hook the lift strap with the quick release hook.
33. Raise the transporter.
34. Turn lights off.
35. Stow the transporter.
36. Stow the down hole poles.
37. Stow the shoe.
38. Stow the claw.
39. Stow the reel arm.

INTRODUCTION TO TROUBLESHOOTING

Troubleshooting is the art of tracking, locating and, in certain cases, correcting a problem in a system or component. The key to successful troubleshooting is to establish a pattern when tracking a problem to insure basic functions are not overlooked.

GENERAL TROUBLESHOOTING PROCEDURES

The following guides will aid in developing a basic pattern of troubleshooting:

1. Is power available?
2. Is power applied?
3. Are circuit breakers activated?
4. Are fuses blown?
5. Are the appropriate controls activated or in the correct mode?
6. Are the gauges/indicators working and indicating correctly?
7. Are all electrical and mechanical connections mated properly?
8. Are all electrical and mechanical connections free of debris?
9. Are all electrical connections free of moisture?

Check the physical appearance, i.e. cut or chaffed cables and hoses, damaged connectors, bent pins in connectors, burnt wiring or components. Check history of components, i.e. has unit been dropped? Has unit been exposed to moisture?

WARNING! During some of the troubleshooting procedures power will be applied to exposed connectors. Personnel should use extreme caution to prevent possible electrical shock. Personnel performing troubleshooting procedures should be familiar with the operation of VOM Meters.

To test for a short circuit in the cable, proceed as follows:

1. Set the VOM Meter to RX1.
2. Disconnect the TV cable from the TV camera and from the Power Control Unit.
3. Measure between all conductors of the cable at one end of the cable. The meter should read infinite resistance.

To test for an open circuit (continuity), proceed as follows:

1. Disconnect the TV cable from the TV camera and from the Power Control Unit (PCU).
2. Set the VOM Meter on the RX 1 scale and zero the meter.
3. Check continuity of the cable by placing one probe of the meter in the twelve pin PCU connector and the other meter probe in the appropriate connector on the opposite end of the cable.

TV CABLE RESISTANCE END-TO-END:

For K2 systems, the Cable Continuity Test Screen provides a process for testing the continuity of cable conductors. Please refer to the K2 User Manual, Screen Operations Chapter, for more information.

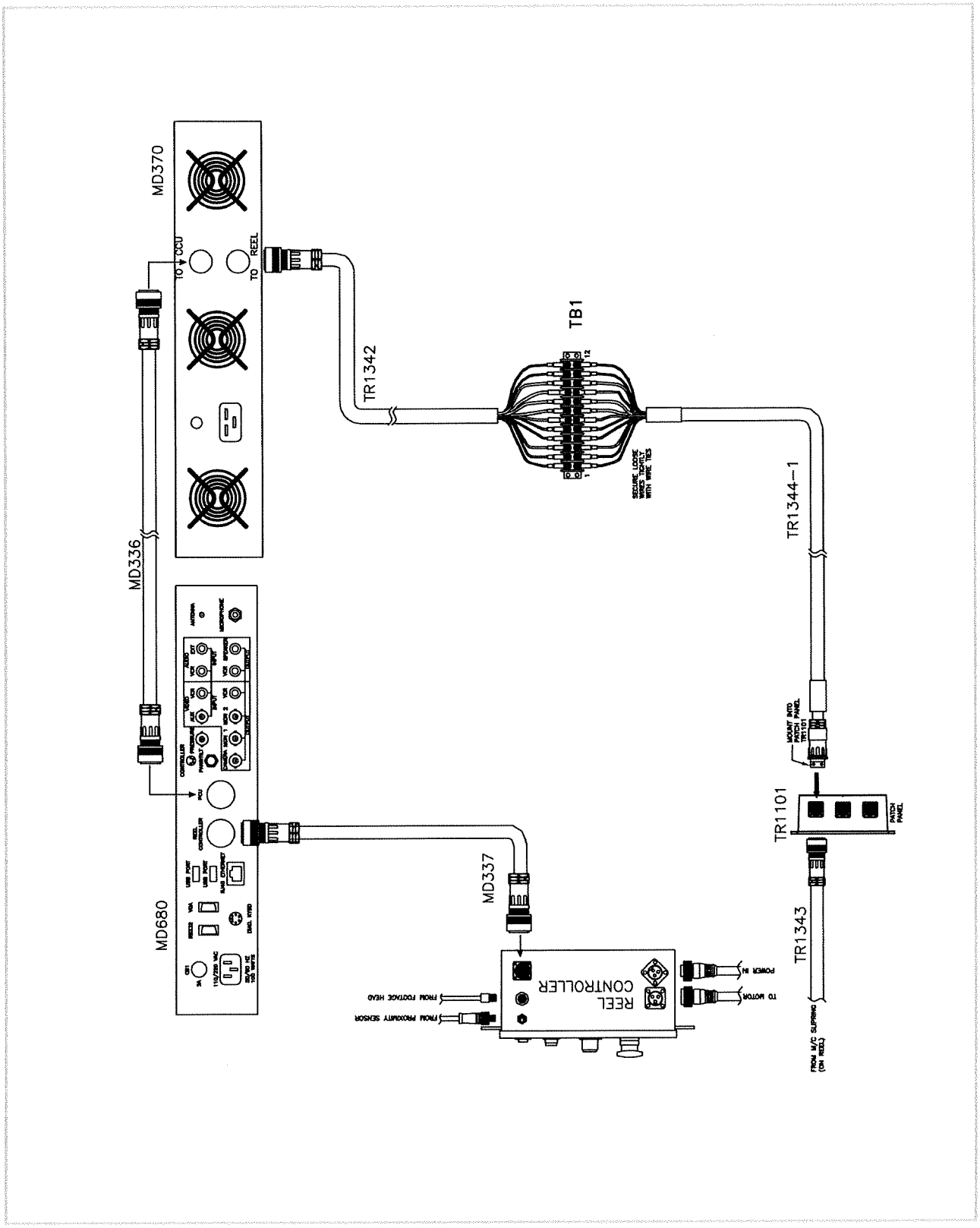

Wiring Diagram, DUC, Basic

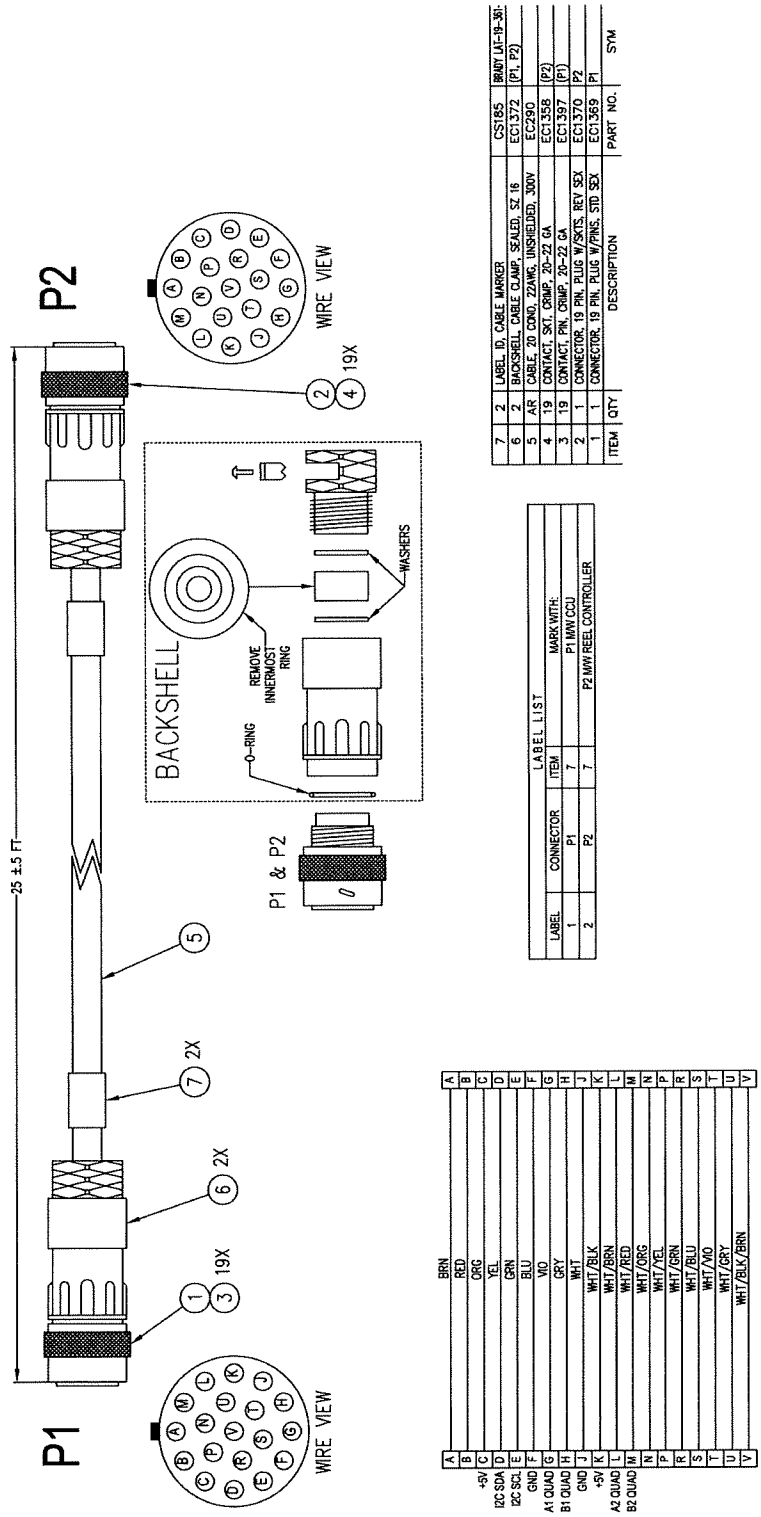

ITEM	QTY	DESCRIPTION	PART NO.	SYM
7	2	LABEL, ID, CABLE MARKER	CS185	BRADY LAT-19-361-
6	2	BACKSHELL, CABLE CLAMP, SEALED, SZ 16	EC1372	(P1, P2)
5	AR	CABLE, 20 COND, 22AWG, UNSHIELDED, 300V	EC2290	
4	19	CONTACT, SKT, CRIMP, 20-22 GA	EC1358	(P2)
3	19	CONTACT, PIN, CRIMP, 20-22 GA	EC1397	(P1)
2	1	CONNECTOR, 19 PIN, PLUG W/SKTS, REV SEX	EC1370	P2
1	1	CONNECTOR, 19 PIN, PLUG W/PINS, STD SEX	EC1369	P1

LABEL LIST

LABEL	CONNECTOR	ITEM	MARK WITH:
1	P1	7	P1 MNY CCU
2	P2	7	P2 MNY REEL CONTROLLER

Cable Assembly, K2 CCU > Reel Controller, MD337

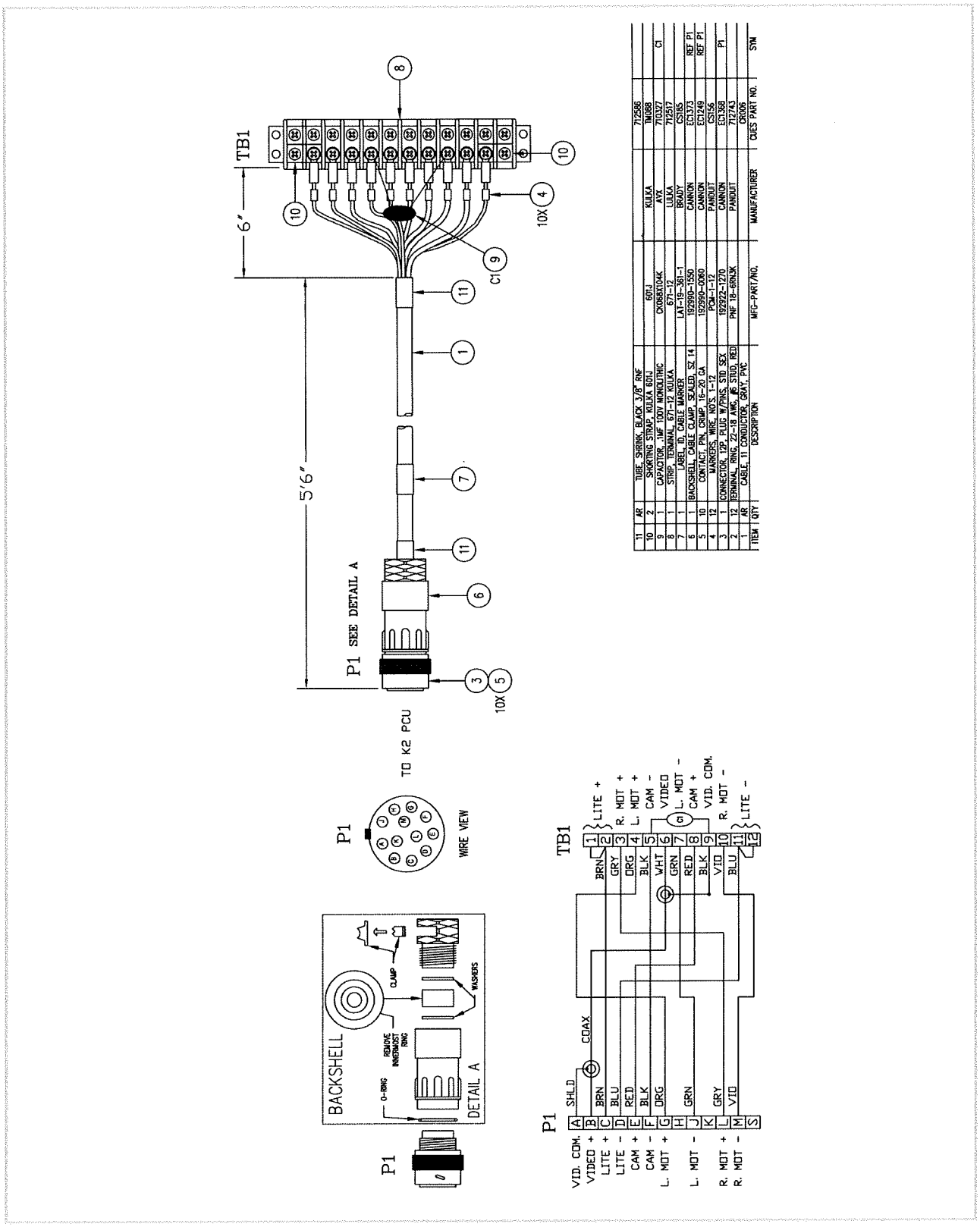

ITEM	QTY	DESCRIPTION	MFG-PART/NO.	MANUFACTURER	CUES PART NO.	STN
11	AR	TUBE, SHRINK, BLACK 3/8" RNF	601J	KULKA	712586	
10	2	SHORTING STRIP, KULKA 601J	CX06BX104K	AVX	TN088	
9	1	CAPACITOR, 1MF 100V MONOLITHIC	671-12	LULKA	710327	C1
8	1	STRIP, TERMINAL, 671-12 KULKA	LAT-19-361-1	BRADY	712517	
7	1	LABEL, ID, CABLE MARKER	192990-1550	CANNON	CS185	
6	1	BACKSHELL, CABLE CLAMP, SEALED, SZ 14	192990-0060	CANNON	EC1373	REF P1
5	10	CONTACT, PIN, CRIMP, 16-20 GA	PCM-1-12	PANDUIT	EC1249	REF P1
4	12	MARKERS, WIRE, NO'S, 1-12	192922-1270	CANNON	CS156	
3	1	CONNECTOR, 12P, PLUG W/PINS, STD. SEX	PNF 18-60N3K	PANDUIT	EC1368	P1
2	12	TERMINAL, RING, 22-18 AWG, #6 STUD, RED			712743	
1	AR	CABLE, 11 CONDUCTOR, GRAY, PVC			CR006	

Cable Assembly, K2 / PCU Term Strip, TR1342

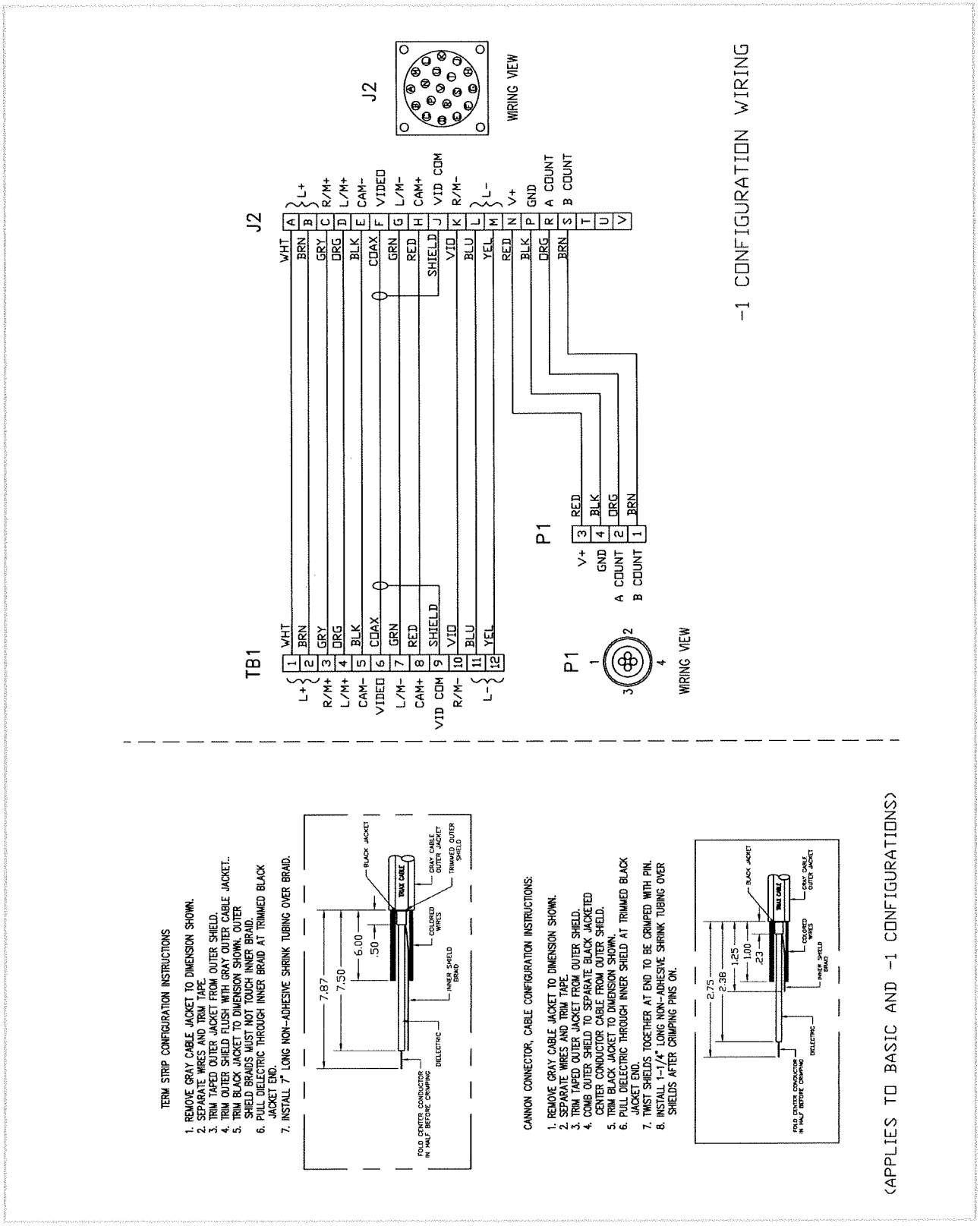

Cable Assembly, Steerable, Term Strip / Interface Panel, TR1344

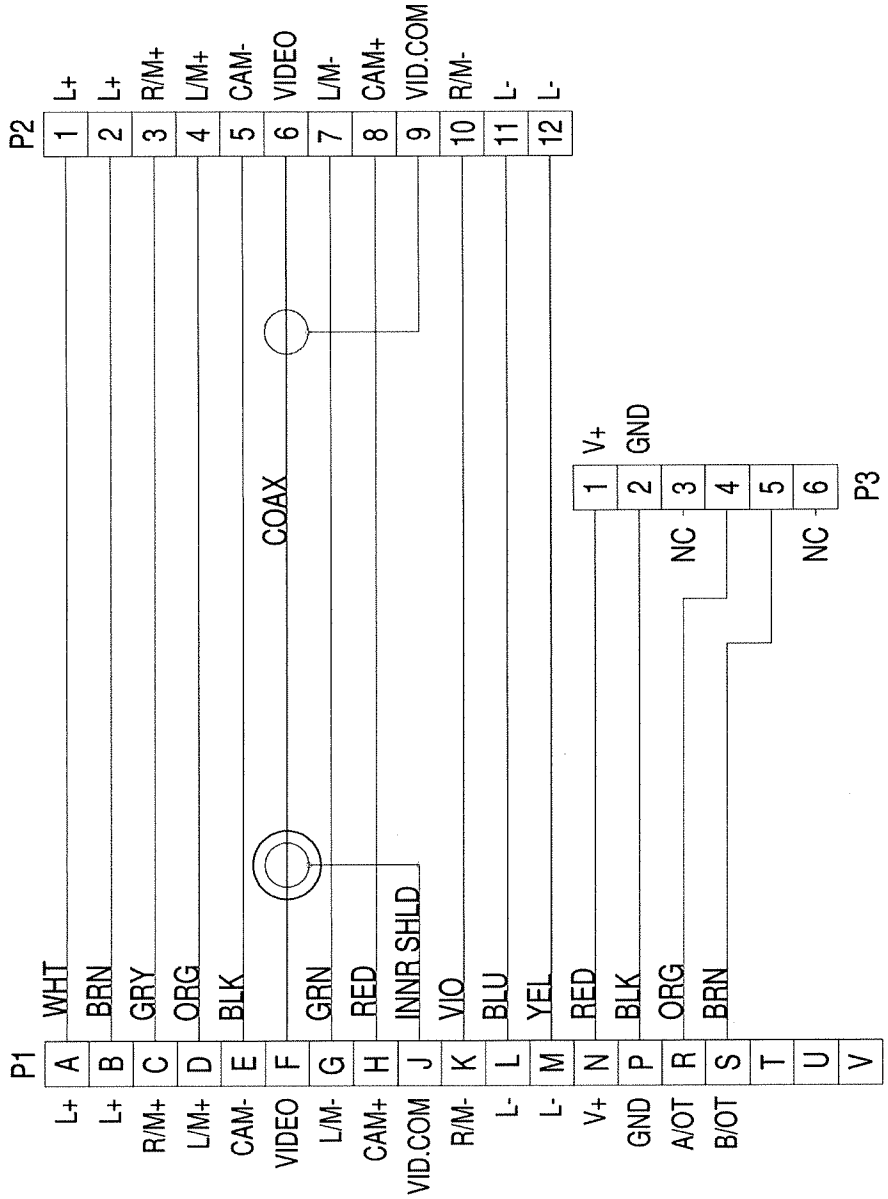

Cable Assembly, Interface Panel / Slipring, Evolution Series, TR1343

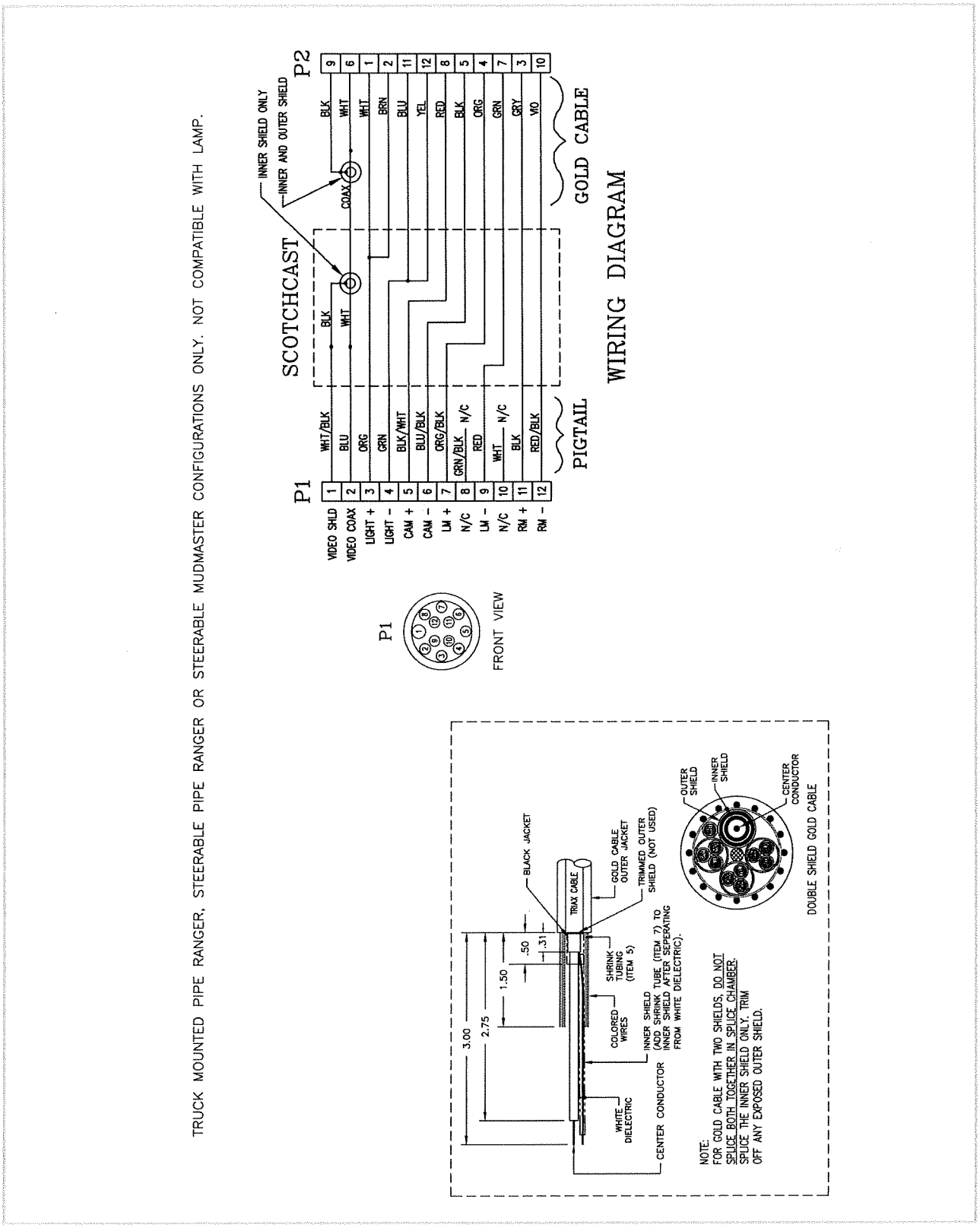

Instruction Sheet, Repair, Truck, 12-Pin Metal, PR, SPR, SMM Only, Gold Cable, RP124-INST

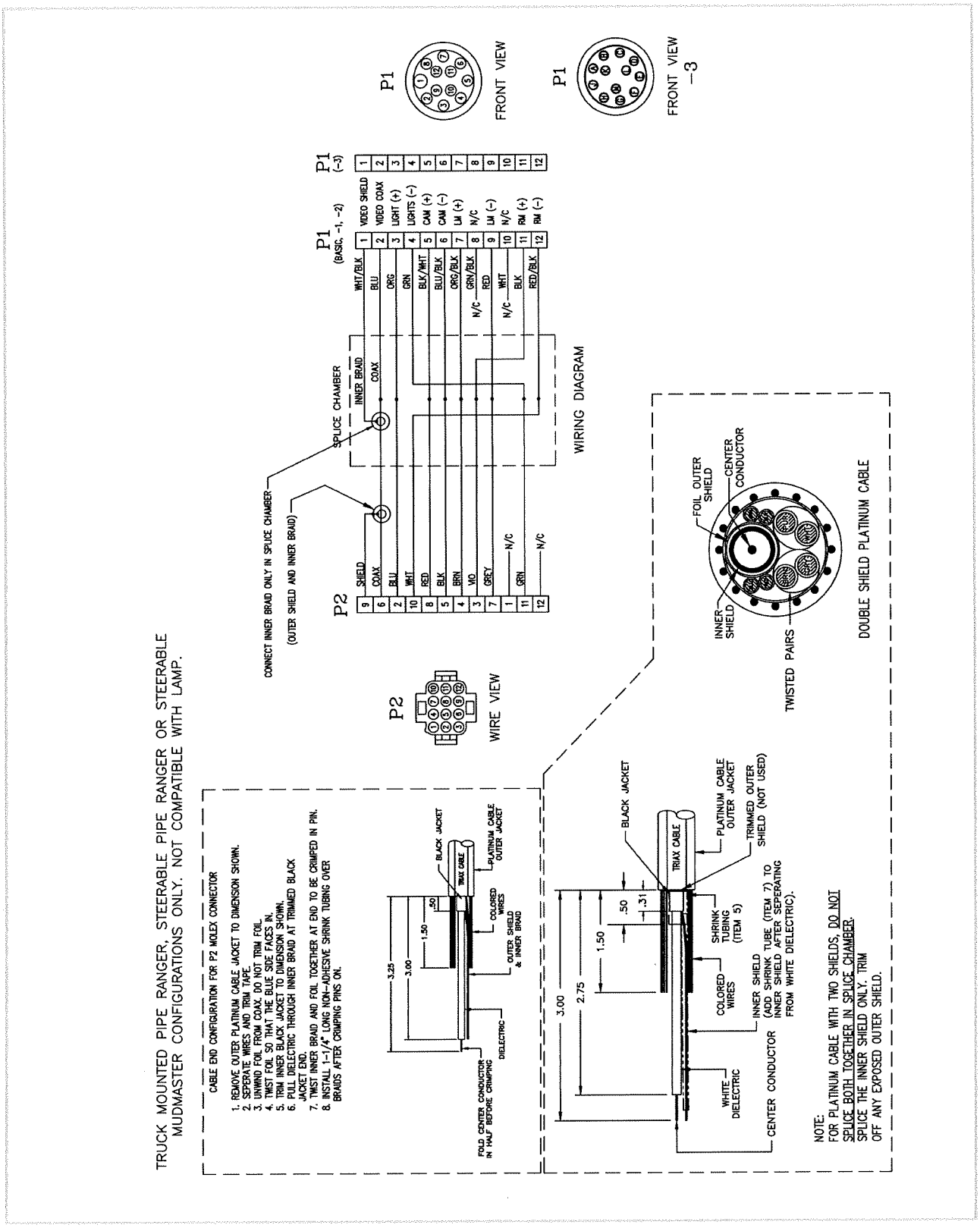

Cable Assembly, M/C, 12-Pin, Platinum Cable, WM305

RECORD OF REVISIONS

This Record of Revision page is designed to allow the manual user to determine the engineering/manufacturing level to which the manual is written. As engineering changes to this hardware are made at CUES, necessary information in the manual will be revised to reflect those changes. The latest change level and the rationale for any change(s) will be explained in tabular format on this page to allow the manual user to be better equipped should the need arise to call CUES regarding technical information.

Original Manual	Revision	Change Description
M/C TV Truck	010100	Initial release
	052013	Revision 1 - updated entire manual to current procedures and information

To ensure the orderly return of CUES products from our customers and to assure proper credit and warranty replacements handled in a timely manner, CUES has implemented a MATERIAL RETURN AUTHORIZATION (MRA) SYSTEM. Please read and follow the instructions below to ensure your MRA is handled properly and efficiently:

1. Once it is determined that a CUES product needs to be returned, call the CUES Parts Department in Orlando at 1-800-327-7791.
2. CUES will provide an MRA number by phone and ask a few questions.
3. CUES will then mail or fax the MATERIAL RETURN AUTHORIZATION (MRA) FORM with the MRA number, or include it with the replacement parts, if applicable.
4. Follow all instructions on the MRA Form. Make 2 copies - one for your records and the other will be used as a packing list.
5. Place an MRA sheet in with the parts that are shipped back to CUES along with a copy of the original packing slip or invoice, if possible. Send only the parts originally agreed upon with your Parts Representative. Any deviations/changes will require an additional MRA.
6. Make sure to include a copy of the MRA form for a packing slip.
7. Write the MRA number on the outside of the box.
8. Please take care in packing the parts that are to be shipped back to CUES. Parts must be individually protected from each other and appropriate packing material must be used to prevent damage during shipping.
9. Freight on the material returned is to be prepaid by the customer. Depending on the warranty determination, CUES, at its' option, may credit freight charges both ways.
10. The parts must be returned to CUES within 5 days of receipt of the MRA for credit to be granted.

Under normal circumstances, a warranty determination can be made within 30 days, and if under warranty, the part will be replaced at no charge. A credit will be issued if you have already received a replacement part. No credits will be issued until CUES receives the defective part.

*******NOTE*******

CUES will not warrant look-alike parts sold by competitors and reserves the right to charge a restocking fee.

CUES shall not be liable for any loss or damage resulting, directly or indirectly, from the use of the materials, or for special, indirect, or consequential damages, economic losses, loss of profits, loss of business, or loss of business opportunity.

Without limiting the generality of the foregoing, this exclusion from liability embraces purchaser's expenses for downtime or for making up downtime, damages to property, and injury to or death of any persons.

CUES neither assumes nor authorizes any person (including employees, agents, or representatives of CUES) to assume for it any other liability, guarantee, or warranty in connection with the sale or use of the materials, and no oral agreements, warranties, or understandings exist collateral to or affecting this warranty.
This warranty shall not be extended, altered, modified, or waived except by a written instrument signed by an authorized CUES representative.

At CUES, we realize your return on investment is directly related to daily production in the field. By stocking the largest inventory of OEM equipment in our industry, CUES strives to ship all parts orders on the same day or within 24 hours after receipt of the order.

Whether you need a camera or a fuse, CUES will quickly process and ship your order in accordance with your schedule requirements! Our experienced parts professionals can help you with parts identification, shipping methods, equipment operation questions, and connect you to the correct specialist for troubleshooting!

CUES offers four convenient stocking locations that contain a large assortment of parts, finished products, portable, and truck mounted systems. Texas, Arizona, Oklahoma and Louisiana customers can be serviced by our local dealerships. Contact us at your most convenient stocking location! For authorized dealer locations, log onto our website at www.cuesinc.com.

Parts can be ordered via phone or facsimile! For operating hours, contact information, and locations, log onto our website at www.cuesinc.com.

Contact us at your most convenient stocking location! Log onto our website at www.cuesinc.com to view the CUES Parts Department & Dealers hours & locations.

CUES Parts Department: Parts turnaround is normally within 24 hours after receipt of order. Please note that special shipping arrangements can be made at the time of the order. All return shipments received at CUES freight collect will be refused upon delivery unless previously authorized by CUES personnel. Normal operating hours are 8am to 5pm, EST., Phone: 800-327-7791, Fax: 800-831-1184.

CUES Service Depot: Service turnaround is normally 72 hours or less upon receipt at our depot, excluding weekends and holidays. All return shipments received at CUES freight collect will be refused upon delivery unless previously authorized by CUES personnel. Normal operating hours are 8am to 5pm, EST., Phone: 800-327-7791.

West Coast

For West Coast Customers:
The parts and service depot is located at 1943 S. Augusta Court, Ontario, CA, 91761. Normal operating hours are 8am to 5pm, PST
Phone: 800-544-8695

Canada

For Canadian Customers:
The parts and service depot is located at 1675 Sismet Road, Unit 2 & 3, Mississauga, Ontario L4W1P9
Phone: 905-238-9178.

ATTACHMENT Z

HIGHLAND SANITARY DISTRICT CONSENT DECREE

CIVIL ACTION NO. 2:22-cv-00086

January 2024

IN THE UNITED STATES DISTRICT COURT
FOR THE NORTHERN DISTRICT OF INDIANA
HAMMOND DIVISION

UNITED STATES OF AMERICA and the STATE OF INDIANA, Plaintiffs, v. The SANITARY DISTRICT OF HIGHLAND and the TOWN OF GRIFFITH, INDIANA, Defendants.	Civil Action No. 2:22-cv-00086

CONSENT DECREE WITH THE SANITARY DISTRICT OF HIGHLAND

TABLE OF CONTENTS

I. JURISDICTION AND VENUE 3
II. PARTIES 4
III. APPLICABILITY 4
IV. OBJECTIVE 5
V. DEFINITIONS 5
VI. CIVIL PENALTY 10
VII. COMPLIANCE REQUIREMENTS 11
VIII. REPORTING REQUIREMENTS 18
IX. PUBLIC WEBSITE 20
X. STIPULATED PENALTIES 21
XI. FORCE MAJEURE 25
XII. DISPUTE RESOLUTION 28
XIII. INFORMATION COLLECTION AND RETENTION 30
XIV. EFFECT OF SETTLEMENT / RESERVATION OF RIGHTS 33
XV. COSTS 34
XVI. NOTICES 35
XVII. EFFECTIVE DATE 37
XVIII. RETENTION OF JURISDICTION 37
XIX. MODIFICATION 37
XX. TERMINATION 38
XXI. PUBLIC PARTICIPATION 39
XXII. SIGNATORIES/SERVICE 39
XXIII. INTEGRATION 40
XXIV. APPENDICES 40
XXV. FINAL JUDGMENT 41

APPENDICES

Appendix A: Highland's SSO Remedial Measures and Post-Remedial Measures Monitoring Plan

Appendix B: Highland's SSO Locations List and Procedure to Eliminate Subsequently Discovered SSOs

Appendix C: Highland's SSO Reporting Table

WHEREAS:

A. Plaintiff United States of America, on behalf of the United States Environmental Protection Agency ("EPA"), and the State of Indiana (the "State"), on behalf of the Commissioner of the Indiana Department of Environmental Management ("IDEM") (collectively the "Plaintiffs"), have filed a Complaint in this action concurrently with this Consent Decree, alleging that Defendant, the Sanitary District of Highland, Indiana ("Highland"), violated Section 301(a) of the Clean Water Act (the "CWA"), 33 U.S.C. § 1311(a), the federal regulations adopted thereunder, Title 13 of the Indiana Code, and the State regulations adopted thereunder.

B. The Complaint alleges that Highland: (1) violated the CWA and Indiana law by discharging untreated sewage into a navigable water from its sanitary sewer system on over 200 occasions since July 2012; and (2) failed to materially comply with an order issued by EPA pursuant to Section 309(a) of the CWA to eliminate its sanitary sewer overflows, among other requirements.

C. A related action (2:17-cv-00048) was filed in this district by the United States and the State against the Hammond Sanitary District ("HSD") in 2017, alleging that HSD violated the CWA by, among other things, exceeding numeric and narrative effluent limits set in HSD's National Pollutant Discharge Elimination System ("NPDES") Permit, including discharging untreated storm water and sanitary wastewater through its combined sewer overflow ("CSO") outfalls into the Grand Calumet and Little Calumet Rivers.

D. The allegations against HSD in the complaint were resolved through a consent decree that was filed simultaneously with the complaint (the "HSD Consent Decree"). The HSD Consent Decree was entered by this Court on May 8, 2017, and required HSD to, among other

things, develop and implement a Long Term Control Plan, as approved by EPA and IDEM, over an 18-year period to substantially reduce CSO discharges from HSD's sewer system and pay penalties for past violations of the CWA. HSD's Long Term Control Plan was conditionally approved by EPA and IDEM on March 17, 2021.

E. Highland does not have its own wastewater treatment plant; rather, it is under contract with HSD to send all of its sanitary flow to HSD for treatment. Under the current wastewater treatment contract between Highland and HSD, Highland may send a maximum peak flow of 7.5 million gallons per day ("MGD") to HSD for treatment. During significant wet weather, however, Highland either sends flows to HSD that exceeds the contractual limit of 7.5 MGD maximum peak flow or experiences sanitary sewer overflows.

F. Under this Consent Decree, Highland will implement a plan approved by EPA and IDEM designed to improve Highland's sanitary sewer collection system and eliminate and prevent SSOs. As part of the plan, Highland will make necessary improvements within its sewer system that will eventually allow it to send to HSD for treatment a maximum peak flow of 32.2 million gallons per day. In order for HSD to accept this increased flow, HSD will make the necessary improvements within its combined sewer system as required by the HSD Consent Decree and the Long Term Control Plan being implemented thereunder.

G. As part of work that HSD will do under its Consent Decree and LTCP (as conditionally approved by EPA and IDEM on March 17, 2021), HSD will increase its capacity to accept flow for treatment from its customer communities. As part of these improvements, in a few years, HSD will have the capacity to accept up to 40 MGD maximum peak flow from Highland for treatment. HSD will be implementing the LTCP under the HSD Consent Decree. HSD's performance under the HSD Consent Decree and Highland's performance under this

Consent Decree require continued cooperation and coordination between HSD and Highland. In order for Highland to begin construction under the Consent Decree, Highland must submit a complete sanitary sewer construction permit application, including a signed certification of capacity by HSD, and secure a valid State permit under Indiana law, 327 IAC 3-2.

H. The Parties agree that the United States and State of Indiana's joint filing of the Complaint and entry into this Consent Decree constitute diligent prosecution by the United States and the State of Indiana under CWA § 505(b)(1)(B), 33 U.S.C. § 1365(b)(1)(B), of all matters alleged in the Complaint and addressed by this Consent Decree through the Date of Lodging of this Decree;

I. Highland denies any liability to the United States or the State arising out of the violations, transactions or occurrences alleged in the Complaint.

J. The Parties recognize, and the Court by entering this Decree finds, that this Decree has been negotiated by the Parties in good faith and will avoid litigation among the Parties, and that this Decree is fair, reasonable, and in the public interest.

NOW, THEREFORE, before the taking of any testimony, without the adjudication or admission of liability, and with the consent of the Parties, IT IS HEREBY ADJUDGED, ORDERED, AND DECREED as follows:

I. JURISDICTION AND VENUE

1. For purposes of this Consent Decree, the Parties agree this Court has jurisdiction over the subject matter of this action, pursuant to 28 U.S.C. §§ 1331, 1345, and 1355, and CWA § 309(b), 33 U.S.C. § 1319(b), and over the Parties. The Parties also agree that this Court has supplemental jurisdiction over the State law claims alleged in the Complaint pursuant to 28 U.S.C. § 1367(a), because the State claims are related to the federal claims and form part of

the same case or controversy. The Parties also agree that venue is proper in this District pursuant to CWA § 309(b), 33 U.S.C. § 1319(b), and 28 U.S.C. § 1391(b), because it is the judicial district where Highland is located.

2. For purposes of this Decree, Highland waives all objections and defenses that it may have to jurisdiction of the Court or to venue in this District. Highland shall not challenge the terms of this Decree or this Court's jurisdiction to enter and enforce this Decree.

II. PARTIES

3. "Highland" is the Sanitary District of Highland, Indiana, and is the political subdivision that owns and operates a separate sanitary sewer system in the City of Highland, Indiana.

4. The "United States" is a Plaintiff, the United States of America, acting on behalf of the EPA.

5. The "State" is a Plaintiff, the State of Indiana, acting on behalf of IDEM.

III. APPLICABILITY

6. This Decree applies to and is binding upon the United States and the State, and upon Highland and any successors, assigns, or other entities or persons otherwise bound by law.

7. No transfer of ownership or operation of the Sanitary Sewer Collection System ("SSCS"), whether in compliance with the procedures of this Paragraph or otherwise, shall relieve Highland of its obligation to ensure that the terms of the Decree are implemented. At least 30 Days prior to such transfer, Highland shall provide a copy of this Decree to the proposed transferee and shall simultaneously provide written notice of the prospective transfer, together with a copy of the proposed written agreement, to EPA Region 5, the United States Attorney for the Northern District of Indiana, IDEM, and the United States Department of Justice, in

accordance with Section XVI (Notices) of this Decree. Any attempt to transfer ownership or operation of the SSCS without complying with this Paragraph constitutes a violation of this Decree.

8. Highland shall make available a copy of this Decree to all officers, employees, and agents whose duties might reasonably include compliance with any provision of this Decree, as well as to any contractor retained to perform work required under this Decree. Highland shall condition any such contract upon performance of the work in conformity with the terms of this Decree. Highland may satisfy the requirement to provide a copy of this Consent Decree by providing an electronic copy.

9. In any action to enforce this Decree, Highland shall not raise as a defense the failure by any of its officers, directors, employees, agents, or contractors to take any actions necessary to comply with the provisions of this Decree.

IV. OBJECTIVE

10. All plans, measures, reports, construction, maintenance, operational requirements, and other obligations in this Decree, or resulting from the activities required by this Decree, shall have the objective of causing Highland to achieve and maintain full compliance with the CWA.

V. DEFINITIONS

11. Terms used in this Consent decree that are defined in the CWA or in regulations promulgated under the CWA shall have the meanings assigned to them in the CWA or such regulations, unless otherwise provided in this Decree. Whenever the terms set forth below are used in this Decree, the following definitions shall apply:

a. "Building/Property Backup" means a wastewater release or backup into a building or onto private property that is caused by blockages, flow conditions, or other

conditions in Highland's Sanitary Sewer Collection System. A wastewater backup or release that is caused solely by conditions in a Private Service Connection Lateral is not a Building/Property Backup for purposes of this Decree;

b. "Complaint" means the complaint filed by the United States and the State in this action against the Town of Griffith and the Sanitary District of Highland;

c. "Contractual Peak Flow Rate" means the maximum instantaneous or sustained pumping rate that Highland will send to HSD for treatment of 32.2 million gallons per day (MGD) of which 25 MGD will originate from the proposed Highland N. 5th Street Lift Station and 7.2 MGD will originate from the existing 81st Street Lift Station;

d. "Consent Decree" or "Decree" means this Consent Decree and all appendices attached hereto listed in Section XXIII;

e. "CWA" means the Clean Water Act, 33 U.S.C. § 1251 *et seq.*, as amended, and the regulations promulgated thereunder;

f. "Date of Lodging" means the date upon which this Decree is filed with the Court, before a period of at least 30 Days during which the United States accepts comments from the public regarding the terms of this Decree. The Date of Lodging is, by necessity, at least 30 days prior to the Effective Date of this Decree.

g. "Day" means a calendar day unless expressly stated to be a business day. In computing any period of time under this Decree, where the last day would fall on a Saturday, Sunday, or federal holiday, the period shall run to include the next business day;

h. "Defendant" means the Sanitary District of Highland, Indiana, which is a political subdivision of the State;

i. "Deliverable" means any written document required to be submitted by Highland to EPA and IDEM for review and approval under this Consent Decree;

j. "EPA" means the United States Environmental Protection Agency and any of its successor departments or agencies;

k. "Effective Date" is defined as provided in Section XVII (Effective Date);

l. "Force Main" means any pipe that receives and conveys, under pressure, wastewater from the discharge side of a pump;

m. "Gravity Sewer Line" means pipes that receive, contain, and convey wastewater not normally under pressure, but intended to flow unassisted under the influence of gravity, including trunk sewers;

n. "HSD Consent Decree" means the consent decree signed by the United States, on behalf of EPA, and the State of Indiana, on behalf of IDEM, and the Hammond Sanitary District, and entered on May 8, 2017, which requires, among other things, that the Hammond Sanitary District develop and implement a Long Term Control Plan that is consistent with EPA's CSO Control Policy found at 59 Fed. Reg. 18,688 (April 19, 1994) and the terms of that consent decree, and as approved by EPA and IDEM;

o. "HSD's Approved Long Term Control Plan ("LTCP")" means the Long Term Control Plan submitted by HSD under the HSD Consent Decree, conditionally approved by EPA and IDEM on March 17, 2021;

p. "IDEM" means the Indiana Department of Environmental Management and any successor departments or agencies of the State;

q. "Infiltration" means water other than wastewater that enters a sewer system (including sewer service connections and foundation drains) from the ground through such

means as defective pipes, pipe joints, connections, or manholes, but does not include, and is distinguished from, inflow, as defined by 40 C.F.R. § 35.2005(b)(20);

r. "Inflow" means water other than wastewater that enters a sewer system (including sewer service connections) from sources such as, but not limited to, roof leaders, cellar drains, yard drains, area drains, drains from springs and swampy areas, manhole covers, cross connections between storm sewers and sanitary sewers, catch basins, cooling towers, storm waters, surface runoff, street wash waters, or drainage, but does not include, and is distinguished from, infiltration, as defined by 40 C.F.R. § 35.2005(b)(21);

s. "I/I" means the total quantity of water from Infiltration and Inflow into the Sanitary Sewer Collection System without distinguishing the source;

t. "Million Gallons per Day" or "MGD" means a flow rate expressed in millions of gallons per day. A flow rate for a shorter period of time, such as an hour, may also be expressed in MGD. For example, a flow of one million gallons in an hour would be equivalent to a flow rate of 24 MGD;

u. "Paragraph" means a portion of this Decree identified by an Arabic numeral;

v. "Parties" means the United States, the State, and Highland;

w. "Plaintiffs" means the United States and the State.

x. "Private Service Connection Lateral" means any sewerage not owned by Highland used to convey wastewater from a building or buildings to the Sanitary Sewer Collection System owned by Highland;

y. "Pump Station" means a facility comprised of pumps that lifts wastewater to a higher hydraulic elevation, including all related electrical, mechanical, and structural

systems necessary to operate that Pump Station;

z. "Sanitary Sewer Collection System" or "SSCS" means all portions of the municipal wastewater collection and transmission system, including all pipes, interceptors, Force Mains, Gravity Sewer Lines, lift stations, Pumping Stations, wastewater storage basins/structures, manholes, and all appurtenances to the foregoing, that are owned and/or operated by Highland;

aa. "Sanitary Sewer Overflow" or "SSO" means an overflow, a reportable spill pursuant to 327 IAC 2-6.1-6, a diversion, or a release of wastewater, from or caused by Highland's SSCS, that: a) discharges to waters of the State or United States from Highland's SSCS; or b) releases to public or private property that does not reach waters of the United States or the State, such as a release to a land surface or structure; provided, however, that such releases that are caused solely by conditions in a Private Service Connection Lateral are not SSOs for the purpose of this Decree. As such, the term SSO includes Building/Property Backups caused in whole or in part by conditions in Highland's SSCS;

bb. "SSO Locations" means the locations where SSOs have occurred in Highland's SSCS. A list of the SSO Locations that have been identified as of the Date of Lodging is included in Appendix B of this Consent Decree;

cc. "Section" means a portion of this Decree identified by a Roman numeral;

dd. "State" means the State of Indiana, acting on behalf of IDEM;

ee. "United States" means the United States of America, acting on behalf of EPA.

VI. CIVIL PENALTY

12. Within 60 Days after the Effective Date, Highland shall pay a civil penalty in the amount of $87,500 to the United States and $87,500 to the State for the violations alleged against Highland in the Complaint, together with interest from the Date of Lodging of this Decree, accruing at the rate specified in 28 U.S.C. § 1961 as of the Date of Lodging.

13. Highland shall pay the civil penalty due by FedWire Electronic Funds Transfer ("EFT") to the U.S. Department of Justice account, in accordance with instructions provided to Highland by the Financial Litigation Unit ("FLU") of the United States Attorney's Office for the District of Northern Indiana after the Effective Date. The payment instructions provided by the FLU will include a Consolidated Debt Collection System ("CDCS") number, which Highland shall use to identify all payments required to be made in accordance with this Decree. The FLU will provide the payment instructions to:

Clerk-Treasurer
Town of Highland
3333 Ridge Road
Highland, Indiana 46322-2049
mgriffin@highland.in.gov

on behalf of Highland. Highland may change the individual to receive payment instructions on its behalf by providing written notice of such change to the United States and EPA in accordance with Section XVI (Notices).

14. At the time of payment, Highland shall send notice that payment has been made: (a) to EPA via email at cinwd_acctsreceivable@epa.gov or via regular mail at EPA Cincinnati Finance Office, 26 W. Martin Luther King Drive, Cincinnati, Ohio 45268; (b) to the United States via email or regular mail in accordance with Section XVI; and (c) to EPA in accordance with Section XVI. Such notice shall state that the payment is for the civil penalty owed pursuant

to the Consent Decree in *United States of America and the State of Indiana v. the Sanitary District of Highland and the Town of Griffith, Indiana* (N.D. Ind.), the assigned CDCS Number, and DOJ case number 90-5-1-1-3308/4.

15. Payment to the State shall be made by certified check payable to:

Cashier:
Indiana Department of Environmental Management
100 N. Senate Ave.
MC 50-10C
Indianapolis, IN 46204-2251

Highland shall notify the State of this payment in accordance with Section XVI (Notices) of this Decree, by correspondence including the following: *United States of America and the State of Indiana v. the Sanitary District of Highland and the Town of Griffith, Indiana* (N.D. Ind.).

VII. COMPLIANCE REQUIREMENTS

16. SSOs occurring in or from Highland's SSCS are prohibited.

A. Implementing SSO Remedial Measures

17. SSO Remedial Measures Plan.

a. The purpose of the SSO Remedial Measures Plan is to eliminate all SSO Locations identified in Appendix B and prevent SSOs occurring in Highland's SSCS. Highland shall demonstrate elimination of all SSO Locations in accordance with Appendix A.

b. Within 30 Days of the Effective Date, Highland shall begin implementing the SSO Remedial Measures Plan, as provided in Appendix A of this Decree.

c. The SSO Remedial Measures Plan shall be completed by February 1, 2033.

18. Post-Remedial Measures Monitoring Plan. Highland will implement the Post-Remedial Measures Monitoring Plan by installing and operating the monitoring equipment, as

described in Part 2 of Appendix A of this Decree, and shall commence monitoring in accordance with the requirements and schedule of Part 2 of Appendix A of this Decree. The purpose of the Monitoring Plan is to determine whether the Remedial Measures undertaken have eliminated all SSO Locations identified in Appendix B and will prevent SSOs occurring in Highland's SSCS in accordance with Appendix A.

19. Post-Remedial Measures Monitoring Report. Within 180 Days of completing the monitoring under the Post-Remedial Measures Monitoring Plan, Highland shall submit a Post-Remedial Measures Monitoring Report to EPA and the State for review and approval. This report shall include the following:

a. a tabulation of all SSOs that occurred in or from Highland's SSCS from the Date of Lodging through the completion of the Post-Remedial Measures Monitoring Plan. This tabulation shall include the information required under Paragraph 25 (Semi-Annual Overflow Logs) of this Decree and an analysis of the rainfall data using Bulletin 71, Rainfall Frequency Atlas of the Midwest or HERPICC Storm Water Drainage Manual, July 1995;

b. applicable flow monitoring data;

c. the results of Highland's validation or recalibration of its then-current SWMM Collection System Model (or modeling platform equivalent) that includes the remedial measures implemented under Appendix A; and

d. the results from Highland's use of its SWMM Collection System Hydraulic Model (or modeling platform equivalent) to evaluate its successful implementation of the SSO Remedial Measures Plan including a narrative description about whether Highland's Remedial Measures Plan has eliminated SSOs in accordance with Appendix A.

20. Supplemental SSO Remedial Measures Plan. If at any time during the Post-Remedial Measures Monitoring period or after Highland submits its Post-Remedial Measures Monitoring Report, Highland demonstrates that it has not eliminated all SSO Locations and prevented SSOs in accordance with Appendix A, EPA and IDEM will notify Highland that it is required to submit a Supplemental SSO Remedial Measures Plan. Within 90 Days of receiving this notification, Highland shall submit to EPA and the State, for review and approval, a Supplemental SSO Remedial Measures Plan that proposes additional measures that Highland will undertake to eliminate SSO Locations and prevent SSOs within its SSCS consistent with Section 2.3 of Appendix A and a schedule for implementing the Supplemental SSO Remedial Measures. Upon written approval by EPA and the State, Highland shall implement the approved Supplemental SSO Remedial Measures Plan under the approved schedule.

21. Supplemental SSO Remedial Measures Monitoring Plan. Highland shall implement a Supplemental Post-Remedial Measures Monitoring Plan upon completion of the Supplemental SSO Remedial Measures Plan by installing and operating any additional monitoring equipment required, as described in Part 2 of Appendix A of this Decree, and shall commence monitoring in accordance with the requirements of Part 2 of Appendix A of this Decree. The purpose of the Supplemental SSO Remedial Measures Monitoring Plan is to determine whether the Supplemental SSO Remedial Measures undertaken have addressed all of the deficiencies identified in the Supplemental SSO Remedial Measures Plan.

22. Supplemental Remedial Measures Monitoring Report. Within 180 Days of completing the Supplemental SSO Remedial Measures Monitoring Plan, Highland shall submit a Supplemental SSO Remedial Measures Monitoring Report to EPA and the State for review and approval. This report shall include the following:

a. a tabulation of all SSOs that occurred in or from Highland's SSCS from the Date of Lodging through the Supplemental Remedial Measures Monitoring period. This tabulation shall include the information required under Paragraph 25 (Semi-Annual Overflow Logs) of this Decree and an analysis of the rainfall data using Bulletin 71, Rainfall Frequency Atlas of the Midwest or HERPICC Storm Water Drainage Manual, July 1995;

b. applicable flow monitoring data; the results of Highland's validation or recalibration of its then-current SWMM Collection System Model (or modeling platform equivalent) that includes both the SSO Remedial Measures implemented under Appendix A and the Supplemental SSO Remedial Measures Plan described in Paragraph 20 of this Decree; and the results from Highland's SWMM Collection System Hydraulic Model (or modeling platform equivalent) including a narrative description about whether Highland's SSO Remedial Measures Plan and Supplemental SSO Remedial Measures Plan have fully resolved all of the deficiencies identified in the original Supplemental SSO Remedial Measures Monitoring Report, with the purpose of ensuring that all SSO Locations have been eliminated and future SSOs are prevented in accordance with Appendix A.

B. SSO Flow Monitoring and Reporting Requirements

23. SSO Flow Monitors. Within 30 Days of the Effective Date, or within 30 Days from the date of discovering any additional SSO Location, Highland shall install and operate flow monitoring technology at each SSO Location, if it has not already done so, in order to detect and record when an SSO may occur or actually occurs at each SSO Location and to measure and record the volume of SSO discharged. To mitigate the adverse effect of any SSO, the flow monitoring device at each SSO Location shall instantaneously and automatically alert

Highland to an SSO event. Highland shall install and operate the following flow monitoring technology:

a. Area-velocity flow meters, such as Environmental Services Triton+ Flow Monitoring System with CS4 combo sensor or functional equivalent, in cross connect pipe at the following SSO locations: (i) Sanitary-to-Storm Sewer Cross Connect #1 (Sanitary Manhole 1345); and (ii) Sanitary-to-Storm Sewer Cross Connect #2 (Sanitary Manhole 1230);

b. Alarm system and the use of manually recorded pump start and stop times and speed adjustment times and speed settings to calculate discharge durations and volumes at the following SSO locations: (i) Constructed SSO at North 5th Street Lift Station; (ii) Constructed SSO at North 81st Street Lift Station; (iii) Constructed SSO at 41st Street Lift Station; and (iv) Constructed SSO in Northeast area of North 5th Street Subbasin, located at the intersection of Grace Place and Duluth Ave. The alarm system for locations (i) through (iii) above shall be provided by Highland's SCADA system for these sanitary lift stations. The alarm system for location (iv) above may be provided by an ADS Environmental Services ECHO ultrasonic level sensor installed in MH 1059 (or the functional equivalent thereof) that includes a cellular modem to instantaneously and automatically alert Highland to a high water level.

24. Reporting all SSOs. Highland shall report all SSOs from its SSCS. This reporting shall include:

a. contacting the Lake County Health Department at (219) 755-3655 within one hour of learning of the SSO or Building/Property Backup. All such notifications shall include the location of the SSO or Building/Property Backup, the receiving and impacted waters, if any, and an estimation of the volume of the discharge; and

b. an initial electronic report to IDEM by email, with a copy to EPA, within

24-hours of the time Highland becomes aware of the SSO or Building/Property Backup. The electronic report will be completed using State Form 48373 and emailed to IDEM at wwreports@idem.IN.gov and to EPA at r5weca@epa.gov. The email subject line will specify that the correspondence is concerning an SSO or Building/Property Backup in Highland, Indiana, and the body of the email shall reference the docket number for this Consent Decree as well as the State case identifier number (INN580004). The completed State Form 48373 for each SSO location shall be attached to the email.

25. Semi-Annual Overflow Logs. By July 31st (for the reporting period of January – June) and January 31st (for the reporting period of July – December) of each year beginning the calendar year after this Decree is lodged, Highland shall submit copies of its final and completed electronic reports to IDEM and EPA using State Form 48373 for each SSO location at which an SSO occurred during the reporting period. Highland shall also complete and submit to IDEM and EPA the SSO Reporting Table attached hereto as Appendix C for every SSO that occurred during the reporting period.

C. Miscellaneous Compliance Provisions

26. Based on evaluations of previous drafts of the plans by all Parties, Highland has submitted an updated Capacity, Management, Operation, and Maintenance Plan and Overflow Emergency Response Plan to EPA and IDEM for review and approval. Upon approval, Highland shall immediately begin implementing the plans.

27. Approval of Deliverables. After review of any Deliverable submitted by Highland under this Decree, EPA and the State shall in writing: (a) approve the submission; (b) approve part of the submission and disapprove the remainder; or (c) disapprove the whole submission.

28. If the submission is approved pursuant to Paragraph 27(a), Highland shall take all actions required by the plan, report, or other document, in accordance with the schedules and requirements of the plan, report, or other document, as approved. If the submission is approved only in part pursuant to Paragraph 27(b), Highland shall, upon written direction from EPA and the State, take all actions required by the approved plan, report, or other item that EPA and the State determine are technically severable from any disapproved portions, subject to Highland's right to dispute only the disapproved portions, under Section XII (Dispute Resolution).

29. If the submission is disapproved in whole or in part pursuant to Paragraph 27(b) or (c), Highland shall, within 45 days or such other time as the Parties agree to in writing, correct all deficiencies and resubmit the plan, report, or other item, or disapproved portion thereof, for approval, in accordance with the preceding Paragraphs. If the resubmission is approved in whole or in part, Highland shall proceed in accordance with the preceding Paragraph.

30. If a resubmitted plan, report, or other item, or portion thereof, is disapproved in whole or in part, EPA and the State may again require Highland to correct any deficiencies, in accordance with the preceding Paragraphs, or may themselves correct any deficiencies subject to Highland's right to invoke Dispute Resolution and the right of EPA and the State to seek stipulated penalties as provided in Section X (Stipulated Penalties) of this Decree.

31. Any stipulated penalties applicable to the original submission, as provided in Section X, shall accrue during the 45 day period provided in Paragraph 27 or other specified period, but shall not be payable unless the resubmission is untimely or is disapproved in whole or in part; provided that, if the original submission was so deficient as to constitute a material breach of Highland's obligations under this Decree, the stipulated penalties applicable to the original submission shall be due and payable notwithstanding any subsequent resubmission.

32. Permits. Where any compliance obligation under this Section requires Highland to obtain a federal, state, or local permit or approval, Highland shall submit timely and complete applications and take all other actions necessary to obtain all such permits or approvals. Highland may seek relief under the provisions of Section XI (Force Majeure) for any delay in the performance of any such obligation resulting from a failure to obtain, or a delay in obtaining, any permit or approval required to fulfill such obligation, if Highland has submitted timely and complete applications and has taken all other actions necessary to obtain all such permits or approvals.

VIII. REPORTING REQUIREMENTS

33. Semi-Annual Report. By July 31st and January 31st of each year after the lodging of this Consent Decree, until termination of this Decree pursuant to Section XX (Termination), unless otherwise agreed to by EPA and the State in writing, Highland shall submit to Plaintiffs pursuant to Section XVI (Notices), a Semi-Annual Report that shall: (a) describe the work, and associated deadlines, that Highland completed under this Decree during the preceding six-month period; (b) include documentation (*e.g.*, as-built diagrams, photographs, etc.) of the work and the deadlines met and (c) describe any non-compliance with any requirement of this Decree, explaining the reasons for any non-compliance and the remedial steps taken, or to be taken, to minimize such non-compliance or prevent its recurrence.

34. If Highland violates, or has reason to believe that it may violate, any requirement of this Decree, Highland shall notify the United States and the State of such violation and its likely duration, in writing, within ten Days of the Day Highland first becomes aware of the violation, with an explanation of the likely cause of the violation and the remedial steps taken, or to be taken, to prevent or minimize such violation. If the cause of a violation cannot be fully

explained at the time the report is due, Highland shall so state in the report. Highland shall investigate the cause of the violation and shall then submit an amended report that includes a full explanation of the cause of the violation, within 30 Days of the Day Highland becomes aware of the cause of the violation. Nothing in this Paragraph or the following Paragraph relieves Highland of its obligation to provide the notice required by Section XI (Force Majeure).

35. Whenever any violation of this Decree or of any permits affecting Highland's performance under this Decree or any other event affecting Highland's performance under this Decree, or the performance of its SSCS, may pose an immediate threat to the public health or welfare or the environment, Highland shall notify EPA and the State by electronic means, as provided in Section XVI (Notices), as soon as possible, but no later than 24 hours after Highland first knew of the violation or event. This procedure is in addition to the requirements set forth in the preceding Paragraph.

36. All reports shall be submitted to the persons designated in Section XVI (Notices).

37. Each report submitted by Highland under this Section shall be signed by an official of the submitting party and include the following certification:

> I certify under penalty of law that this document and all attachments were prepared under my direction or supervision in accordance with a system designed to assure that qualified personnel properly gather and evaluate the information submitted. Based on my inquiry of the person or persons who manage the system, or those persons directly responsible for gathering the information, the information submitted is, to the best of my knowledge and belief, true, accurate, and complete. I have no personal knowledge that the information submitted is other than true, accurate, and complete. I am aware that there are significant penalties for submitting false information, including the possibility of fine and imprisonment for knowing violations.

38. This certification requirement does not apply to emergency or similar notifications where compliance would be impractical.

39. The reporting requirements of this Decree do not relieve Highland of any reporting obligations required by the CWA or its implementing regulations, or by any other federal, state, or local law, regulation, permit, or other requirement.

40. Any information provided pursuant to this Decree may be used by the United States in any proceeding to enforce the provisions of this Decree and as otherwise permitted by law.

IX. PUBLIC WEBSITE

41. Within 30 Days from the Effective Date, Highland shall have an operable Website for the posting of Decree Deliverables and the Consent Decree. EPA and IDEM shall have an opportunity to review and comment on the structure and content of the Website within 30 days of the Date of Lodging of this Decree. Highland shall announce the availability of the Website by a press release, and the Town of Highland's official homepage, www.highland.in.gov, shall include a link to the Website. The Website may be a part of Highland's website on the Town of Highland's official website. All posted Deliverables shall be readily accessible, electronically searchable, and accurately labeled. The Website shall include the following:

a. Consent Decree. Highland shall post on the Website an electronic copy of the entered Consent Decree.

b. Consent Decree Submissions. Highland shall post to the Website all Deliverables that have been reviewed and approved by EPA and the State and the Semi-Annual Reports required by Section VIII (Reporting Requirements). Deliverables shall be posted within thirty days of approval.

c. SSO Public Notification. Within 30 Days of the Effective Date of this Decree, Highland shall post on its Website a completed State Form 48373 after each SSO that

occurs. These reports shall be posted on the Website within twenty-four (24) hours of submitting to IDEM State Form 48373. Once posted, Highland shall not remove any of the State Forms from the website; if Highland needs to amend a report, it will post the original report and any amendments to that report.

d. Other Public Presentations and Education Materials. Highland shall post to its Website materials used in presentations to the public related to the work required under this Consent Decree and other relevant educational materials on SSOs identified by Highland, the State, or EPA.

X. STIPULATED PENALTIES

42. Highland shall be liable for stipulated penalties to the United States and the State for violations of this Consent Decree as specified below, unless excused under Section XI (Force Majeure). A violation includes failing to perform any obligation required by the terms of this Decree, including any work plan or schedule approved under this Decree, according to all applicable requirements of this Decree and within the specified time schedules established by or approved under this Decree.

43. Late Payment of Civil Penalty. If Highland fails to pay the civil penalty required to be paid under Section VI (Civil Penalty) when due, Highland shall pay a stipulated penalty of $1,000 per Day for each Day that the payment is late.

44. The following stipulated penalties shall accrue per violation per Day for failing to meet any of the requirements set forth in Paragraphs 17 (SSO Remedial Measures Plan); 18 (Post-Remedial Measures Monitoring Plan); 20 (Supplemental SSO Remedial Measures Plan): 23 (SSO Flow Monitors); 26 (Implementing a CMOM Plan and Overflow Emergency Response Plan); 32 (Permits); and 41 (Public Website and other posting requirements):

Period of noncompliance	Penalty Per Violation Per Day
1st through 30th day of violation	$1,500
31th through 60th day of violation	$2,000
61st day and beyond	$3,000

45.

a. SSOs. The following stipulated penalties shall accrue per violation per Day that an SSO occurs from any location in Highland's SSCS, as prohibited by Paragraph 16:

Volume of SSO (in gallons)	**If *in compliance* with the SSO Remedial Measures Plan (Appendix A) *and before* the Completion Date of the Phase 1 Projects identified in Appendix A (Table A.1, Detailed Implementation Schedule)**	**If *not in compliance* with the SSO Remedial Measures Plan (Appendix A) *or after* the Completion Date of the Phase 1 Projects identified in Appendix A (Table A.1, Detailed Implementation Schedule)**
500 or less	$500	$1,000
501 to 10,000	$2,000	$4,000
Greater than 10,000	$4,000	$8,000

b. Failure to add SSO locations. The following stipulated penalties shall accrue for each Day that Highland fails to report a new SSO Location in accordance with Appendix B: $3,000 per Day per violation.

46. Reporting Requirements. The following stipulated penalties shall accrue per violation per Day for the failure to submit or late submission of the reports required by the reporting requirements of Paragraphs 19 (Post-Remedial Measures Monitoring Report); 24 (Reporting all SSOs); 25 (Semi-Annual Overflow Logs); 33 (Semi-Annual Report); 34 (Reporting non-compliance); 35 (Reporting immediate threats to public health) and Part 2 of Appendix B (Procedure to Modify the List of SSO Locations):

Period of noncompliance	Penalty Per Violation Per Day
1st through 30th day of continuous violation	$250
31th through 60th day of continuous violation	$500
After 60 days of continuous violations	$1,000

47. The following stipulated penalties shall accrue per violation per Day for each violation of this Consent Decree not included in Paragraphs 44-46:

Period of noncompliance	Penalty Per Violation Per Day
1st through 30th day of violation	$100
31th through 60th day of violation	$200
61st day and beyond	$500

48. Stipulated penalties under this Section shall begin to accrue on the Day after performance is due or on the Day a violation occurs, whichever is applicable, and shall continue to accrue until performance is satisfactorily completed or until the violation ceases. Stipulated penalties shall accrue simultaneously for separate violations of this Decree.

49. Highland shall pay stipulated penalties to the United States and the State within 60 Days of a written demand by either Plaintiff stating the alleged violation(s); the duration of each violation(s); and the amount of the stipulated penalties due. Nothing is this Consent Decree shall preclude Highland from asserting any defense it may have under the Consent Decree, the CWA, its implementing regulations, or any permit to any alleged violation of the terms of this Decree. Highland shall pay 50 percent of the total stipulated penalty amount due to the United States and 50 percent to the State. The Plaintiff making a demand for payment of a stipulated penalty shall simultaneously send a copy of the demand to the other Plaintiff.

50. Either Plaintiff may, in the unreviewable exercise of its discretion, reduce or waive stipulated penalties otherwise due it under this Decree.

51. Stipulated penalties shall continue to accrue as provided in Paragraph 48, during any Dispute Resolution, but need not be paid until the following:

a. If the dispute, or any part of the dispute, is resolved by concession of Highland, agreement by the Parties, or by a decision of EPA or the State that is not appealed to the Court, Highland shall pay accrued penalties determined to be owing, together with interest, to the United States and the State within 60 Days of the date of such concession, the effective date of the agreement, or Highland's receipt of EPA's or the State's decision or order.

b. If the dispute is appealed to the Court and the United States or the State prevail in whole or in part, Highland shall pay all accrued penalties determined by the Court to be owing, together with interest, within 60 Days of receiving the Court's decision or order, except as provided in subparagraph c, below.

c. If any Party appeals the District Court's decision, Highland shall pay all accrued penalties as ordered by the appellate court, or the District Court if the issue is remanded, together with interest, within 30 Days of receiving the final adjudication of the dispute.

d. Where more than one violation of this Decree is raised in a Dispute, and fewer than all of the violations are resolved by Highland's concession, agreement of the Parties, or decision or order by the United States or the State that is not appealed to the Court, then Highland shall pay the accrued stipulated penalties associated with the resolved violations, together with interest, to the United States and the State, within 30 Days of such resolution.

52. Highland shall pay stipulated penalties owing to the United States in the manner set forth and with the confirmation notices required by Paragraphs 14 and 15, except that the

transmittal letter shall state that the payment is for stipulated penalties and shall state for which violation(s) the penalties are being paid.

53. If Highland fails to pay stipulated penalties according to the terms of this Decree, Highland shall be liable for interest on such penalties, as provided by 28 U.S.C. § 1961, accruing as of the date payment became due. Nothing in this Paragraph shall be construed to limit the United States or the State from seeking any remedy otherwise provided by law for Highland's failure to pay any stipulated penalties.

54. The payment of penalties and interest, if any, shall not alter in any way Highland's obligation to complete the performance of the requirements of this Decree.

55. Non-Exclusivity of Remedy. Stipulated penalties are not the United States' exclusive remedy for violations of this Decree. Subject to the provisions of Section XIV (Effect of Settlement/Reservation of Rights), the United States expressly reserves the right to seek any other relief it deems appropriate for Highland's violation of this Decree or applicable law, including but not limited to an action against Highland for statutory penalties, additional injunctive relief, mitigation or offset measures, and/or contempt. However, the amount of any statutory penalty assessed for a violation of this Decree shall be reduced by an amount equal to the amount of any stipulated penalty assessed and paid pursuant to this Decree.

XI. FORCE MAJEURE

56. "Force majeure," for purposes of this Consent Decree, is defined as any event arising from causes beyond the control of Highland, of any entity controlled by Highland, or of Highland's contractors that delays or prevents the performance of any obligation under this Decree despite Highland's best efforts to fulfill the obligation. The requirement that Highland

exercise "best efforts to fulfill the obligation" includes using best efforts to anticipate any potential force majeure event and best efforts to address the effects of any potential force majeure event (a) as it is occurring and (b) following the potential force majeure, such that the delay and any adverse effects of the delay are minimized. "Force Majeure" does not include Highland's financial inability to perform any obligation under this Decree.

57. If any event occurs or has occurred that may delay the performance of any obligation under this Decree, whether or not caused by a force majeure event, Highland shall provide notice by electronic means to EPA and the State within 72 hours of when Highland first knew that the event might cause a delay. Within 10 days thereafter, Highland shall provide in writing to EPA and the State an explanation and description of the reasons for the delay; the anticipated duration of the delay; all actions taken or to be taken to prevent or minimize the delay; a schedule for implementation of any measures to be taken to prevent or mitigate the delay or the effect of the delay; Highland's rationale for attributing such delay to a force majeure event if it intends to assert such a claim; and a statement as to whether, in the opinion of Highland, such event may cause or contribute to an endangerment to public health, welfare, or the environment. Highland shall include with any notice all available documentation supporting the claim that the delay was attributable to a force majeure event. Failure to comply with the above requirements shall preclude Highland from asserting any claim of force majeure for that event for the period of time of such failure to comply, provided, however, that if EPA, despite the late or incomplete notice, is able to assess to its satisfaction whether the event is a force majeure and whether Highland has exercised its best efforts under Paragraph 56, EPA may, in its unreviewable discretion, excuse in writing the Highland's failure to submit timely or complete notices under this Paragraph. Highland shall be deemed to know of any circumstance of which

Highland, any entity controlled by Highland, or Highland's contractors knew or should have known.

58. If EPA and the State agree with Highland that the delay or anticipated delay is attributable to a force majeure event, the time for performance of the obligations under this Decree that are affected by the force majeure event will be extended by EPA and the State, for such time as is necessary to complete those obligations. An extension of the time for performance of the obligations affected by the force majeure event shall not, of itself, extend the time for performance of any other obligation. EPA and the State will notify Highland in writing of the length of the extension, if any, for performance of the obligations affected by the force majeure event.

59. If EPA and the State do not agree with Highland that the delay or anticipated delay has been or will be caused by a force majeure event, EPA and the State will, within 60 Days, notify Highland in writing of their decision and the bases supporting its decision.

60. If Highland elects to invoke the informal or formal dispute resolution procedures set forth in Section XII (Dispute Resolution), it shall do so no later than 15 days after receipt of EPA and the State's notice. In any such proceeding, Highland shall have the burden of demonstrating by a preponderance of the evidence that the delay or anticipated delay has been or will be caused by a force majeure event, that the duration of the delay or the extension sought was or will be warranted under the circumstances, that best efforts were exercised to avoid and mitigate the effects of the delay, and that Highland complied with the requirements of Paragraphs 56 and 57. If Highland carries this burden, the delay at issue shall be deemed not to be a violation by Highland of the affected obligation of this Decree identified to EPA, the State, and the Court.

XII. DISPUTE RESOLUTION

61. Unless otherwise expressly provided for in this Consent Decree, the dispute resolution procedures of this Section shall be the exclusive mechanism to resolve disputes arising under or with respect to this Decree. A dispute shall be considered to have arisen when one Party sends the other Parties a written Notice of Dispute.

62. If Plaintiffs require additional information about any dispute covered by this Section, Plaintiffs may, in their full discretion, attempt to obtain such information from Highland through information requests prior to utilizing other legal authority otherwise available to Plaintiffs.

63. Informal Dispute Resolution. Any dispute between the United States or the State and Highland subject to Dispute Resolution under this Decree shall first be the subject of informal negotiations. The dispute shall be considered to have arisen when one Party sends the other Parties a written Notice of Dispute. Such Notice of Dispute shall state clearly the matter in dispute. The period of informal negotiations shall not exceed 45 Days from the date the dispute arises, unless that period is modified by written agreement of the Parties. If the Parties cannot resolve a dispute by informal negotiations, then the position advanced by the United States and the State shall be considered binding unless, within 15 Days after the conclusion of the informal negotiation period, Highland invokes formal dispute resolution procedures as set forth below.

64. Formal Dispute Resolution.

a. Highland shall invoke formal dispute resolution procedures, within the time period provided in the preceding Paragraph, by serving on the United States and the State a written Statement of Position regarding the matter in dispute. The Statement of Position shall include, but need not be limited to, any factual data, analysis, or opinion supporting Highland's

position and any supporting documentation relied upon by Highland.

b. The United States and the State shall serve their Statement(s) of Position within 30 Days of receipt of Highland's Statement of Position. The United States and the State's Statement(s) of Position shall include, but need not be limited to, any factual data, analysis, or opinion supporting that position and all supporting documentation relied upon by the United States and the State. The United States and the State's Statement(s) of Position shall be binding on Highland, unless Highland files a motion for judicial review of the dispute in accordance with the following Paragraph.

c. An administrative record of the dispute shall be maintained by EPA and shall contain all Statements of Position, including supporting documentation, submitted pursuant to this Paragraph. Where appropriate, EPA may allow submission of supplemental materials by any party to the dispute.

65. Judicial Review. Highland may seek judicial review of the dispute by filing with the Court and serving on the United States and the State, in accordance with Section XVI (Notices), a motion requesting judicial resolution of the dispute. The motion must be filed within 10 Days of receipt of the United States and the State's Statement(s) of Position pursuant to the preceding Paragraph. The motion shall contain a written statement of Highland's position on the matter in dispute, including any supporting factual data, analysis, opinion, or documentation, and shall set forth the relief requested and any schedule within which the dispute must be resolved for orderly implementation of the Decree.

66. The United States and the State shall respond to Highland's motion within the time period allowed by the Local Rules of this Court. Highland may file a reply memorandum, to the extent permitted by the Local Rules.

67. Standard of Review

a. Disputes Concerning Matters Accorded Record Review. Except as otherwise provided in this Decree, in any dispute brought under Paragraph 64 (Formal Dispute Resolution) pertaining to the adequacy or appropriateness of plans, procedures to implement plans, schedules or any other items requiring approval by EPA and IDEM under this Decree; the adequacy of the performance of work undertaken pursuant to this Decree; and all other disputes that are accorded review on the administrative record and for which state and federal agencies are afforded deference under applicable principles of administrative law, Highland shall have the burden of demonstrating, based on the administrative record, that the position of the United States is arbitrary and capricious or otherwise not in accordance with law.

b. Other Disputes. Except as otherwise provided this Decree, in any other dispute brought under Paragraph 64 (Formal Dispute Resolution), Highland shall bear the burden of demonstrating that its position complies with this Decree.

68. The invocation of dispute resolution procedures under this Section shall not, by itself, extend, postpone, or affect in any way any obligation of Highland under this Decree, unless and until final resolution of the dispute so provides. Stipulated penalties with respect to the disputed matter shall continue to accrue from the first Day of noncompliance, but payment shall be stayed pending resolution of the dispute as provided in Paragraph 51. If Highland does not prevail on the disputed issue, stipulated penalties shall be assessed and paid as provided in Section X (Stipulated Penalties).

XIII. INFORMATION COLLECTION AND RETENTION

69. Until termination of this Consent Decree, the United States, the State, and their representatives, including attorneys, contractors, and consultants, shall have the right of entry

into any facility covered by this Consent Decree, at all reasonable times, upon presentation of credentials to:

a. monitor the progress of activities required under this Decree;

b. verify any data or information submitted to the United States or the State in accordance with the terms of this Decree;

c. obtain samples and, upon request, splits of any samples taken by Highland or its contractors, or consultants;

d. obtain copies of documentary evidence, including copies of photographs and similar data; and

e. assess Highland's compliance with this Decree.

70. Upon request, Highland shall provide EPA and the State or their authorized representative splits of any samples taken by Highland. Upon request, EPA and the State shall provide Highland splits of any samples taken by EPA or the State.

71. From the Date of Lodging until two years after the termination of this Decree, Highland shall retain, and shall instruct its contractors and agents to preserve, all non-identical copies of all documents, records, or other information (including documents, records, or other information in electronic form) in its or its contractors' or agents' possession or control, or that come into its or its contractors' or agents' possession or control, that relate to Highland's performance of its obligations under this Decree. Such records shall include relevant modeling inputs and outputs, flow data, rainfall data, inspection records, cleaning records, construction plans or as-built drawings, specifications, construction contracts, final payments and notices of completion, and all reports or plans, in additional to records or documents, as specified by either of the Plaintiffs from time to time, that are necessary to evaluate Highland's performance of its

obligations under this Decree. This information-retention requirement shall apply regardless of any contrary corporate or institutional policies or procedures. At any time during this information-retention period, upon request by the United States or the State, Highland shall provide copies of any documents, records, or other information required to be maintained under this Paragraph.

72. At the conclusion of the information-retention period provided in the preceding Paragraph, Highland shall notify the United States and the State at least 90 Days prior to the destruction of any documents, records, or other information subject to the requirements of the preceding Paragraph and, upon request by the United States or the State, Highland shall deliver any such documents, records, or other information to EPA or the State.

73. Highland shall not assert any claim of privilege over factual information or data related to Highland's compliance with any condition or requirement of the Clean Water Act or this Consent Decree. Highland may assert that certain documents, records, and other information are privileged under the attorney-client privilege or any other privilege recognized by State or federal law. If Highland asserts such a privilege, it shall provide Plaintiffs the following: (a) the title of the document, record, or information; (b) the date of the document, record, or information; (c) the name and title of each author of the document, record, or information; (d) the name and title of each addressee and recipient; (e) a description of the subject of the document, record, or information; and (f) the privilege asserted by Highland.

74. Highland may also assert that any information required to be provided under this Section is protected as Confidential Business Information ("CBI") under 40 C.F.R. Part 2. As to any information that Highland seeks to protect as CBI, Highland shall follow the procedures set forth in 40 C.F.R. Part 2.

75. This Decree in no way limits or affects any right of entry and inspection, or any right to obtain information held by the United States or the State pursuant to applicable federal or state laws, regulations, or permits, nor does it limit or affect any duty or obligation of Highland to maintain documents, records, or other information imposed by applicable federal or state laws, regulations, or permits.

XIV. EFFECT OF SETTLEMENT/RESERVATION OF RIGHTS

76. This Consent Decree resolves the civil claims of the United States and the State for the violations alleged against Highland (i) in the Complaint filed in this action, and (ii) under the administrative order issued by the EPA to Highland on August 10, 2011 under docket number V-W-11-AO-07, through the Date of Lodging of this Decree.

77. The United States and the State reserve all legal and equitable remedies available to enforce the provisions of this Decree. This Decree shall not be construed to limit the rights of the United States or the State to obtain penalties or injunctive relief under the CWA or implementing regulations, or under other federal or state laws, regulations, or permit conditions. The United States and the State further reserve all legal and equitable remedies to address any imminent and substantial endangerment to the public health or welfare or the environment arising at, or posed by, Highland's SSCS, whether related to the violations addressed in this Decree or otherwise.

78. In any subsequent administrative or judicial proceeding initiated by the United States or the State for injunctive relief, civil penalties, other appropriate relief relating to Highland's violations, Highland shall not assert, and may not maintain, any defense or claim based upon the principles of waiver, res judicata, collateral estoppel, issue preclusion, claim preclusion, claim-splitting, or other defenses based upon any contention that the claims raised by

the United States or the State in the subsequent proceeding were or should have been brought in the instant case, except with respect to claims that have been specifically resolved pursuant to Paragraph 76.

79. This Decree is not a permit, or a modification of any permit, under any federal, State, or local laws or regulations. Highland is responsible for achieving and maintaining complete compliance with all applicable federal, State, and local laws, regulations, and permits; and Highland's compliance with this Decree shall be no defense to any action commenced pursuant to any such laws, regulations, or permits, except as set forth herein. The United States and the State do not, by their consent to the entry of this Decree, warrant or aver in any manner that Highland's compliance with any aspect of this Decree will result in compliance with provisions of the CWA, 33 U.S.C. § 1251, *et seq.*, or with any other provisions of federal, State, or local laws, regulations, or permits.

80. This Decree does not limit or affect the rights of Highland or of the United States or the State against any third party not a party to this Decree, nor does it limit the rights of any third party not a party to this Decree against Highland, except as otherwise provided by law.

81. This Decree shall not be construed to create rights in, or grant any cause of action to, any third party not party to this Decree.

XV. COSTS

82. The Parties shall bear their own costs of this action, including attorneys' fees, except that the United States and the State shall be entitled to collect the costs (including attorneys' fees) incurred in any action necessary to collect any portion of the civil penalty due under Section VI or any stipulated penalties due under Section X but not paid by Highland.

XVI. NOTICES

83. Unless otherwise specified in this Decree, whenever notifications, submissions, or communications are required by this Consent Decree, they shall be made in writing and addressed as follows:

As to the United States by email:	eescdcopy.enrd@usdoj.gov Re: DJ # 90-5-1-1-3308/4
As to the United States by mail:	EES Case Management Unit Environment and Natural Resources Division U.S. Department of Justice P.O. Box 7611 Washington, D.C. 20044-7611 Re: DJ # 90-5-1-1-3308/4
As to EPA by email:	r5weca@epa.gov & middleton.keith@epa.gov (with any attachments as a text searchable pdf)
As to EPA by mail:	Chief, Water Enforcement and Compliance Assurance Branch (WC-15J) U.S. Environmental Protection Agency, Region V 77 W. Jackson Blvd. Chicago, IL 60604
As to the State:	Chief, Environmental Section Office of the Attorney General Indiana Government Center South, 5th Floor 402 West Washington St. Indianapolis, IN 46204
As to IDEM:	Chief, Compliance Branch Office of Water Quality, Mail Code 65-40 Indiana Department of Environmental Management 100 N. Senate Ave. Indianapolis, IN 46204-2251 and

Office of Legal Counsel
Mail Code 60-01
100 North Senate Street
Indianapolis, IN 46204-2251
badmire@idem.in.gov
Phone: (317) 232-8584

As to Highland:

President, Highland Sanitary Board
3333 Ridge Road
Highland, IN

and

Susan M. Franzetti
Nijman Franzetti LLP
10 N. LaSalle St., Suite 3600
Chicago, IL 60603
sf@nijmanfrranzetti.com

84. Any Party may, by written notice to the other Parties, change its designated notice recipient or notice address provided above.

85. All electronic submittals made to EPA are preferred and must be in Portable Document Format ("pdf") or similar format that is text searchable. If data are submitted in electronic spreadsheet form, Highland will provide the data and corresponding information in editable Excel format and not in image format. If Excel format is not available, then the electronic format should allow for data to be used in calculations by a standard spreadsheet program similar to Excel. The subject of the email correspondence must include the Sanitary District of Highland, the name of the deliverable, and the Court's case number. If Highland is unable to submit a notification, submission, or communication to EPA by email, it shall provide the notification, submission, or communication to the mailing addresses listed above in

Paragraph 83 and include electronic format of the notification, submission, or communication on physical media such as compact disk, flash drive, or a similar storage device.

XVII. EFFECTIVE DATE

86. The Effective Date of this Consent Decree shall be the date upon which this Decree is entered by the Court or a motion to enter the Decree is granted, whichever occurs first, as recorded on the Court's docket.

XVIII. RETENTION OF JURISDICTION

87. The Court shall retain jurisdiction over this case until termination of this Consent Decree, for the purpose of resolving disputes arising under this Decree or entering orders modifying this Decree, pursuant to Sections XII (Dispute Resolution) and XIX (Modification), respectively, or effectuating or enforcing compliance with the terms of this Decree.

XIX. MODIFICATION

88. The terms of this Consent Decree, including any attached appendices, may be modified only by a subsequent written agreement signed by all the Parties. Where the modification constitutes a material change to this Decree, it shall be effective only upon approval by the Court. For the purposes of this Consent Decree, a request for extension of an implementation schedule deadline shall be considered a non-material modification provided that the extension request is related only to deadlines detailed in Appendix A and does not extend the final compliance deadline of February 1, 2033 in Paragraph 17.c. Requests to modify the final compliance deadline shall be considered material modifications. Any non-material extension request shall be effective upon review and approval by Plaintiffs and shall be served upon all the Parties.

89. Any disputes concerning modification of this Decree shall be resolved pursuant to Section XII (Dispute Resolution), provided, however, that, instead of the burden of proof provided by Paragraph 67, the Party seeking the modification bears the burden of demonstrating that it is entitled to the requested modification in accordance with Federal Rule of Civil Procedure 60(b).

XX. TERMINATION

90. After Highland has completed the requirements of Section VII (Compliance Requirements), has complied with all other requirements of this Consent Decree, and has paid the civil penalty and any accrued stipulated penalties as required by this Decree, Highland may serve upon the United States and the State a Request for Termination, stating that Highland has satisfied those requirements, together with all necessary supporting documentation showing that the conditions for termination set forth in this Section have been met.

91. Following receipt by the United States and the State of Highland's Request for Termination, the Parties shall confer informally concerning the Request and any disagreement that the Parties may have as to whether Highland has satisfactorily complied with the requirements for termination of this Decree. If the United States and the State agree that the Decree may be terminated, the Parties shall submit, for the Court's approval, a joint stipulation terminating the Decree.

92. If the United States and the State do not agree that the Decree may be terminated, Highland may invoke Dispute Resolution under Section XII. However, Highland shall not seek Dispute Resolution of any dispute regarding termination until 90 Days after service of its Request for Termination.

93. Regardless of whether Defendant has requested termination of the Consent Decree pursuant to Paragraph 90, the United States and the State may seek the Court's approval to terminate this Consent Decree based upon the United States' and the State's determination that Defendant has met the requirements for termination in accordance with this Section.

XXI. PUBLIC PARTICIPATION

94. This Consent Decree shall be lodged with the Court for a period of not less than 30 Days for public notice and comment in accordance with 28 C.F.R. § 50.7. The United States reserves the right to withdraw or withhold its consent if the comments regarding the Decree disclose facts or considerations indicating that the Decree is inappropriate, improper, or inadequate. Highland consents to entry of this Decree without further notice and agrees not to withdraw from or oppose entry of this Decree by the Court or to challenge any provision of the Decree, unless the United States notified Highland in writing that it no longer supports entry of the Decree.

XXII. SIGNATORIES/SERVICE

95. Each undersigned representative of Highland and the State of Indiana and the Assistant Attorney General for the Environment and Natural Resources Division of the Department of Justice identified on the DOJ signature page below, certifies that he or she is fully authorized to enter into the terms and conditions of this Consent Decree and to legally bind the Party he or she represents to this document.

96. This Decree may be signed in counterparts, and its validity shall not be challenged on that basis. Highland agrees to accept service of process by mail with respect to all matters arising under or relating to this Decree and to waive the formal service requirements set forth in

Rules 4 and 5 of the Federal Rules of Civil Procedure and any applicable Local Rules of this Court including, but not limited to, service of a summons.

XXIII. INTEGRATION

97. This Consent Decree constitute the final, complete, and exclusive agreement and understanding among the Parties with respect to the settlement embodied in the Decree and supersedes all prior agreements and understandings, whether oral or written. Other than deliverables that are subsequently submitted and approved pursuant to this Decree, the Parties acknowledge that there are no representations, agreements, or understandings relating to the settlement other than those expressly contained in this Decree.

XXIV. APPENDICES

98. The following Appendices are attached to and part of this Consent Decree:

"Appendix A" is Highland's SSO Remedial Measures and Post-Remedial Measures Monitoring Plan.

"Appendix B" is the SSO Locations List and Procedure to Eliminate Subsequently Discovered SSOs.

"Appendix C" is Highland's SSO Reporting Table.

XXV. FINAL JUDGMENT

99. Upon approval and entry of this Consent Decree by the Court, this Decree shall constitute a final judgment of the Court as to the United States, the State, and Highland. The Court finds that there is no just reason for delay and therefore enters this judgment as a final judgment as to Highland under Fed. R. Civ. P. 54 and 58.

Dated and entered this **9th** day of **December**, 2022.

/s/ Philip P. Simon
UNITED STATES DISTRICT JUDGE

The Undersigned Party enters into this Consent Decree between the United States of America, the State of Indiana, and the Sanitary District of Highland.

FOR PLAINTIFF
UNITED STATES OF AMERICA:

UNITED STATES DEPARTMENT OF JUSTICE

TODD KIM
Assistant Attorney General
Environment and Natural Resources Division
U.S. Department of Justice

4/6/22
Date

/s/ Alison C. McGregor
ALISON C. MCGREGOR
Trial Attorney
Environmental Enforcement Section
Environment and Natural Resources Division
U.S. Department of Justice
Washington, DC 20044-7611

CLIFFORD D. JOHNSON
United States Attorney
Northern District of Indiana

SHARON JEFFERSON
Assistant United States Attorney
Northern District of Indiana

The Undersigned Party enters into this Consent Decree between the United States of America, the State of Indiana, and the Sanitary District of Highland.

U.S. ENVIRONMENTAL PROTECTION AGENCY, REGION 5

ROBERT KAPLAN Digitally signed by ROBERT KAPLAN Date: 2022.03.02 20:21:18 -06'00'

_____
Date

ROBERT A. KAPLAN
Regional Counsel
U.S. Environmental Protection Agency, Region 5

Andre Daugavietis Digitally signed by Andre Daugavietis Date: 2022.02.28 16:34:41 -06'00'

ANDRE DAUGAVIETIS
Associate Regional Counsel
U.S. Environmental Protection Agency, Region 5
Office of Regional Counsel

The Undersigned Party enters into this Consent Decree between the United States of America, the State of Indiana, and the Sanitary District of Highland.

U.S. ENVIRONMENTAL PROTECTION AGENCY, OFFICE OF ENFORCEMENT AND COMPLIANCE ASSURANCE

JOSEPH THEIS Digitally signed by JOSEPH THEIS
Date: 2022.03.09 18:27:35 -05'00'

_____
Date

JOSEPH G. THEIS
Acting Division Director
Water Enforcement Division
Office of Civil Enforcement
Office of Enforcement and Compliance Assurance
United States Environmental Protection Agency

The Undersigned Party enters into this Consent Decree between the United States of America, the State of Indiana, and the Sanitary District of Highland.

FOR PLAINTIFF
THE STATE OF INDIANA:

INDIANA DEPARTMENT OF ENVIRONMENTAL MANAGEMENT

3/24/2022
Date

BRIAN C. ROCKENSUESS
Commissioner
Indiana Department of Environmental Management
100 North Senate Street
P.O. Box 6015
Indianapolis, IN 46206

Approved as to form and legality:

3/23/2022
Date

ELIZABETH ADMIRE
Attorney
Indiana Department of Environmental Management
100 North Senate Street
P.O. Box 6015
Indianapolis, IN 46206

INDIANA ATTORNEY GENERAL

March 23, 2022
Date

PATRICIA ORLOFF ERDMANN
Chief Counsel for Litigation
Office of the Indiana Attorney General
402 West Washington Street
IGCS, 5th Floor
Indianapolis, IN 46204

The Undersigned Party enters into this Consent Decree between the United States of America, the State of Indiana, and the Sanitary District of Highland.

FOR DEFENDANT
SANITARY DISTRICT OF HIGHLAND

4/05/2022
Date

RICHARD GARCIA
President, Highland Sanitary Board
3333 Ridge Road
Highland, IN

Appendix A

Highland's SSO Remedial Measures and Post-Remedial Measures Monitoring Plan Requirements

1.0 SSO REMEDIAL MEASURES AND IMPLEMENTATION SCHEDULE

The Sanitary District of Highland (Highland) is a separate sanitary system that originally had seven existing sanitary sewer overflow (SSO) locations in the N. 5th Street Subbasin, 41st St. Subbasin, and 81st Street Subbasin as illustrated in Figure A.1. The SSO location at Sanitary-to-Storm Sewer Cross Connect #3 (Sanitary Manhole 1098) was eliminated in April 2018 when the cross connect was plugged. The SSO location at the 81st Street Lift Station is inactive.

The SSO Remedial Measures in this Appendix are designed to eliminate the remaining SSOs in Highland's sewer system and prevent new SSOs from occurring. The occurrence of any SSO, including from the locations listed in this Appendix, is prohibited by Section 301(a) of the Clean Water Act, 33 U.S.C. § 3301(a), Title 13 of the Indiana Code, the Indiana Administrative Code, 327 Ind. Admin. Code 5-2-2, and the regulations adopted thereunder. As described below, Highland currently has five identified active SSO locations. This plan will require Highland to design and implement SSO Remedial Measures to eliminate those SSO locations as well as any others discovered during the term of this CD.

To address the remaining five SSO locations in the N. 5th Street Subbasin and the 41st Street Subbasin, Highland will construct new gravity sanitary sewers and a new N. 5th Street Lift Station and Force Main as illustrated in Figures A.2 through A.4. *See* SSO Locations in Appendix B of the CD. The SSO Remedial Measures shall be constructed in phases in accordance with the implementation schedule in Table A.1. The Phase I project will eliminate two SSO locations at (a) the N. 5th Street Lift Station and (b) Grace Place and Duluth Avenue. The Phase II project will eliminate two SSO locations at the (a) Sanitary-to-Storm Sewer Cross Connect #1 (Sanitary Manhole 1345) and (b) Sanitary-to-Storm Sewer Cross Connect #2 (Sanitary Manhole 1230). The Phase III project will eliminate the SSO location at the 41st Street Lift Station.

2.0 POST-REMEDIAL MEASURES MONITORING PLAN

The purpose of the Post-Remedial Measures Monitoring Plan is to determine whether the constructed SSO Remedial Measures have eliminated SSOs in Highland's separate sanitary system. Demonstration of SSO elimination is discussed in Section 2.3, below. The specific requirements applicable to the monitoring plan are set forth in the following sections.

2.1 SSO PERFORMANCE MONITORING

After constructing and implementing all phases of the SSO Remedial Measures described in Table A.1, Highland shall monitor rainfall volume and intensity for a 12-month period. Highland shall also collect sewer response data in the pipes upstream of the former SSO locations for a 12-month period, where local hydraulics are favorable for such an installation; otherwise an alternative location will be selected using best industry practices or standards. Such data will be used to properly validate or recalibrate the separate sewer collection system model (currently Highland's SWMM model). The SSO performance monitoring will include the following:

- Highland will monitor rainfall at six locations with tipping bucket rain gauges coinciding with the six historical rain gauge locations shown in Figure A.5. The rain gauges will be monitored continuously and will report the rainfall data at 15-minute intervals.
- As shown in Figures A.6 and A.7, post-construction flow monitors shall be located upstream of the former SSO locations and at three additional locations to monitor the dry and wet weather flow and level data.

2.2 COLLECTION SYSTEM MODEL RECALIBRATION

Highland's SWMM model or an equivalent, widely-used model platform will be used, together with best industry practices or standards, to determine whether the constructed SSO Remedial Measures have achieved the desired performance in Highland's separate sanitary system. To ensure that Highland's model is an appropriate tool for making this determination, a recalibration effort will be undertaken. Upon completion of the SSO performance monitoring described in Section 2.1 above, the following steps will be taken to recalibrate the Highland's model:

- Flow, rainfall, and SSO control data will be collected for a 12-month post-construction period as described in Section 2.1, above. Rain gauge locations will be as described in Section 2.1., above.
- Highland's model will be updated using record drawings to include all phases of the SSO Remedial Measures described in Table A.1.
- A minimum of three rainfall events will be selected for validation or, if necessary, recalibration purposes. If recalibration is necessary, an additional three events will be used for post-recalibration validation.

A final modeling analysis with a proper dry weather and wet weather calibration and validation that meets the table below (based on the CIWEM Code of Practice for the Hydraulic Modeling of Urban Drainage Systems Version 01, 2017 (previously the WaPUG Code of Practice for the Hydraulic Modeling of Sewer Systems Version 3.001 (December 2002)) for Highland's model:

Hydrograph Component	**Calibration and Validation Requirement**
Timing	The timing of the peaks and troughs of the hydrograph should be +/- 1 hour when comparing the modeled hydrograph to the observed flow meter hydrograph for a minimum of 67% of the calibration and validation events.
Flooding	Highland's model shall predict the location and general magnitude of any sewage-related flooding that actually occurs throughout the City's collection system.
SSO discharges	Highland's model shall predict the occurrence of an SSO from Highland's SSCS and be reasonably similar to the volume of that SSO. In applying the criteria in the previous sentence, it is recognized that the simulation of small duration and volume SSOs is generally more challenging.

Peak Flow Rate	Highland's model hydrograph shall be within -15% to +25% of the observed flow meter data for a minimum of 67% of the calibration and validation events.
Flow Volume	Highland's model hydrograph shall be within -10% to +20% of the observed flow meter data for a minimum of 67% of the calibration and validation events.

2.3 POST-REMEDIAL MEASURES MONITORING REPORT

The measure of successful completion of the SSO Remedial Measures will be demonstrating that Highland has eliminated SSOs in the collection system using the recalibrated model for the 50-year, 1-hour storm and 50-year, 24-hour storm with antecedent conditions assumed to be average warm weather conditions ("Selected Demonstration Storms"). The storms are defined in Floyd A. Huff and Hames R. Angel's *Bulletin 71, Rainfall Atlas of the Midwest, Midwestern Climate Center Research Report 92-03* published in 1992. Highland will use the most common temporal distribution for each duration as described in *Bulletin 71*, Section 4, Table 10 (the 50-year, 1-hour storm will utilize the first quartile distribution and 50-year, 24-hour storm will utilize the third quartile distribution). A SSO Post-Construction Compliance Monitoring Report shall be submitted to the United States and Indiana six months after completion of the SSO Post-Remedial Measures Monitoring Plan described in Section 2.1 above. The SSO Post-Remedial Measures Monitoring Report shall either demonstrate elimination of SSOs using the Selected Demonstration Storms or include a written plan with details on the additional operational and/or structural improvements to be made and a proposed implementation schedule for the additional operational and/or structural improvements.

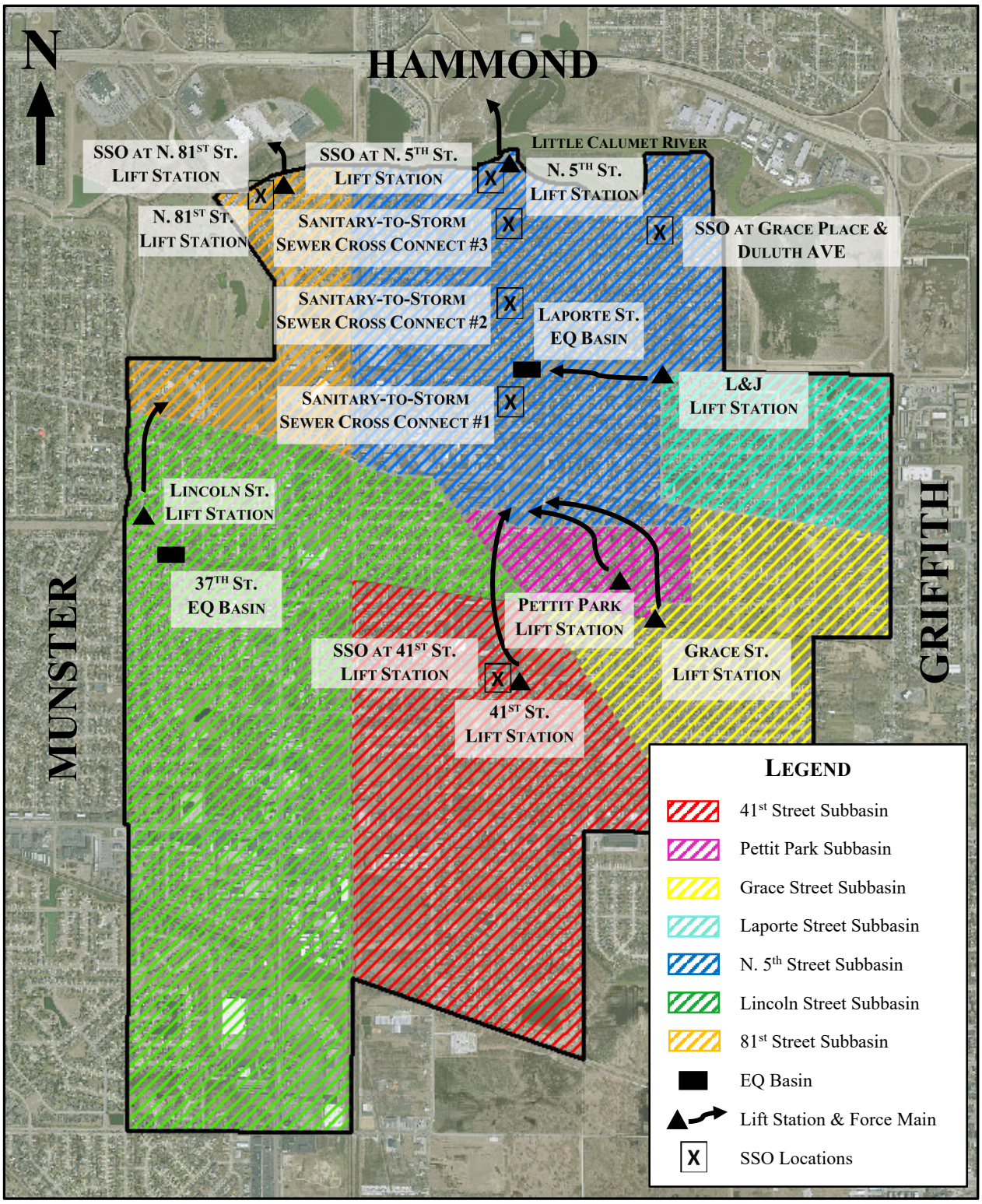

Figure A.1 Highland's Sanitary Sewer Subbasins and SSO Locations

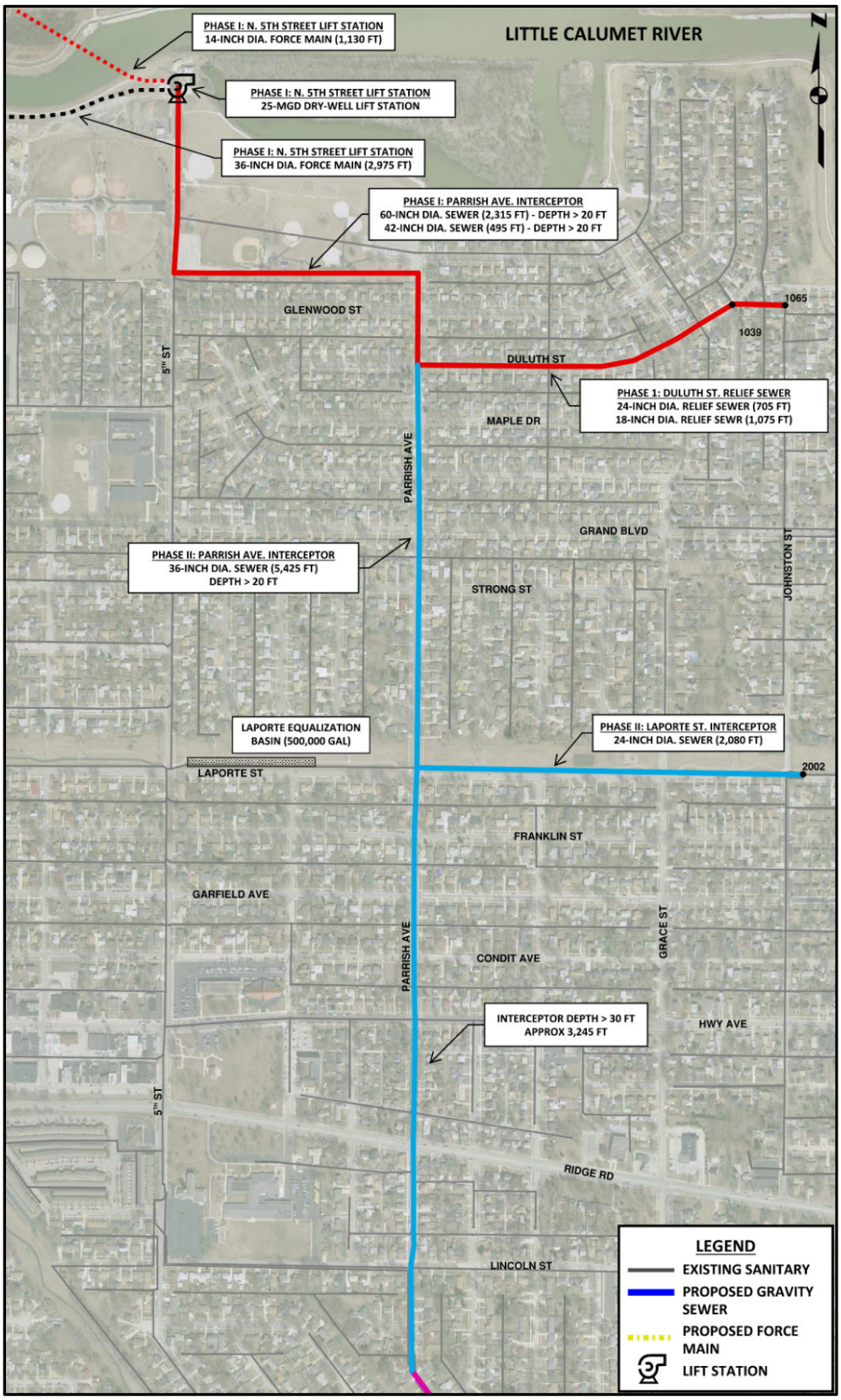

Figure A.2 Highland's SSO Remedial Project

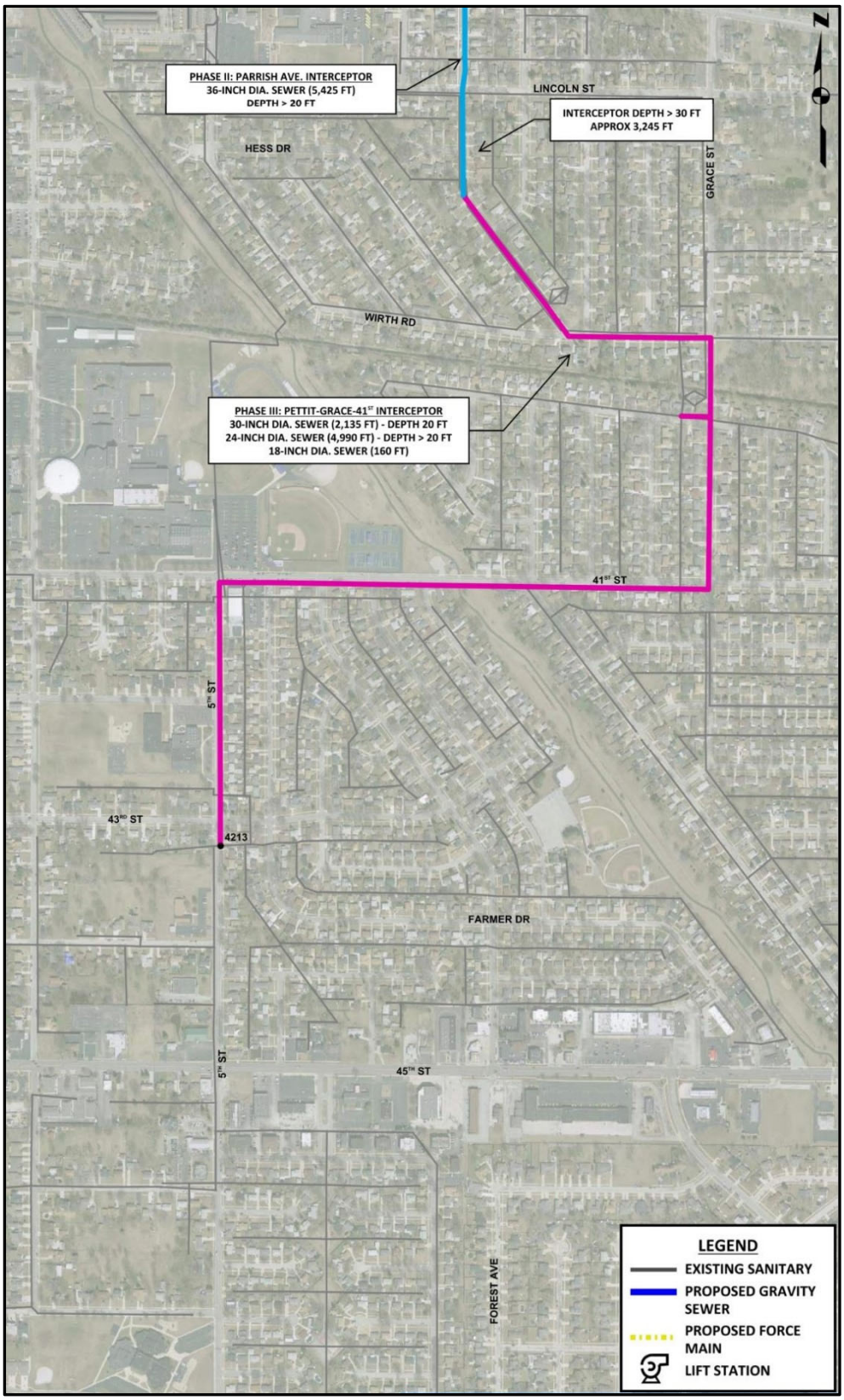

Figure A.3 Highland's SSO Remedial Project

Figure A.4 Highland's SSO Remedial Project

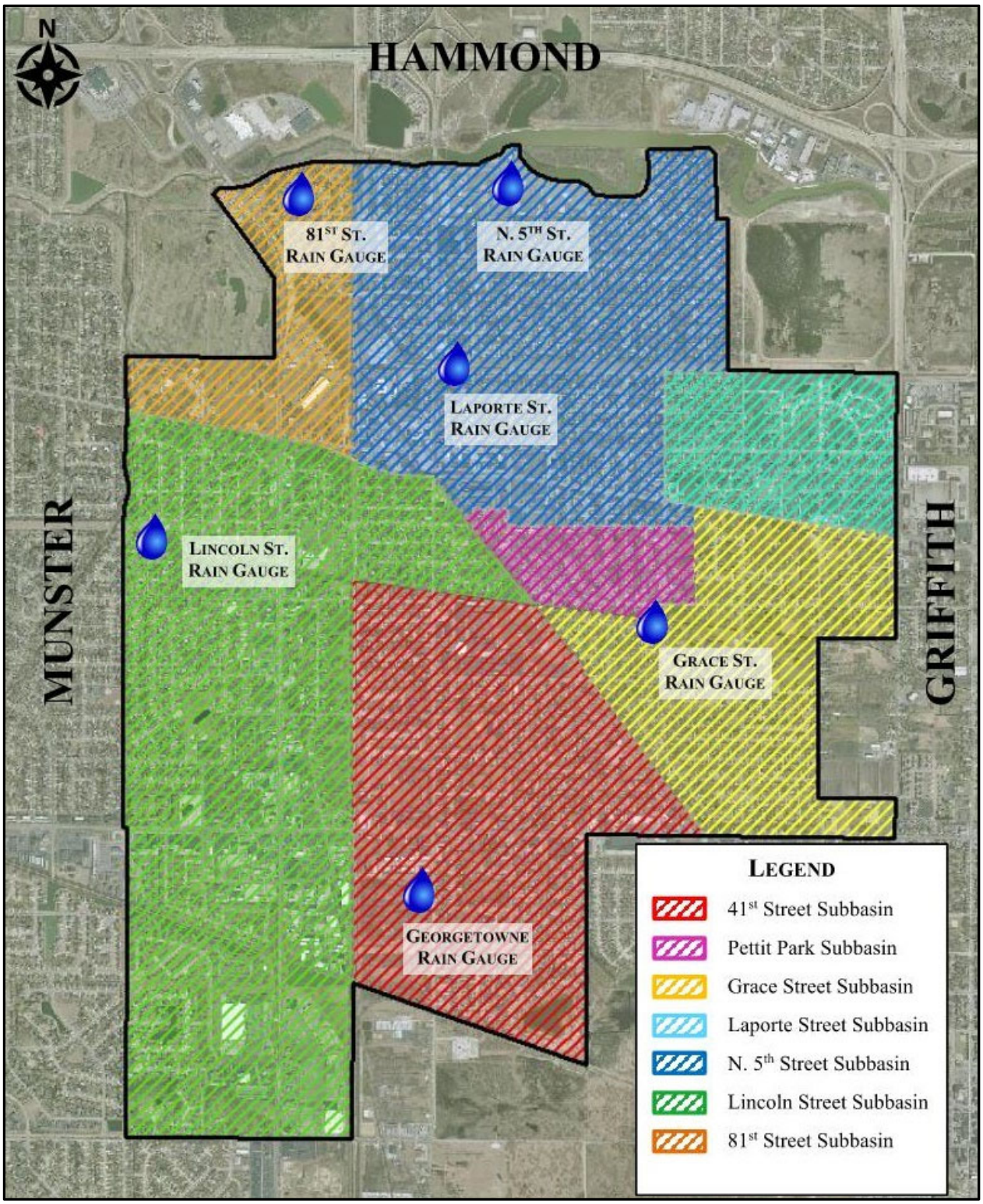

Figure A.5 Highland's Rain Gauge Locations

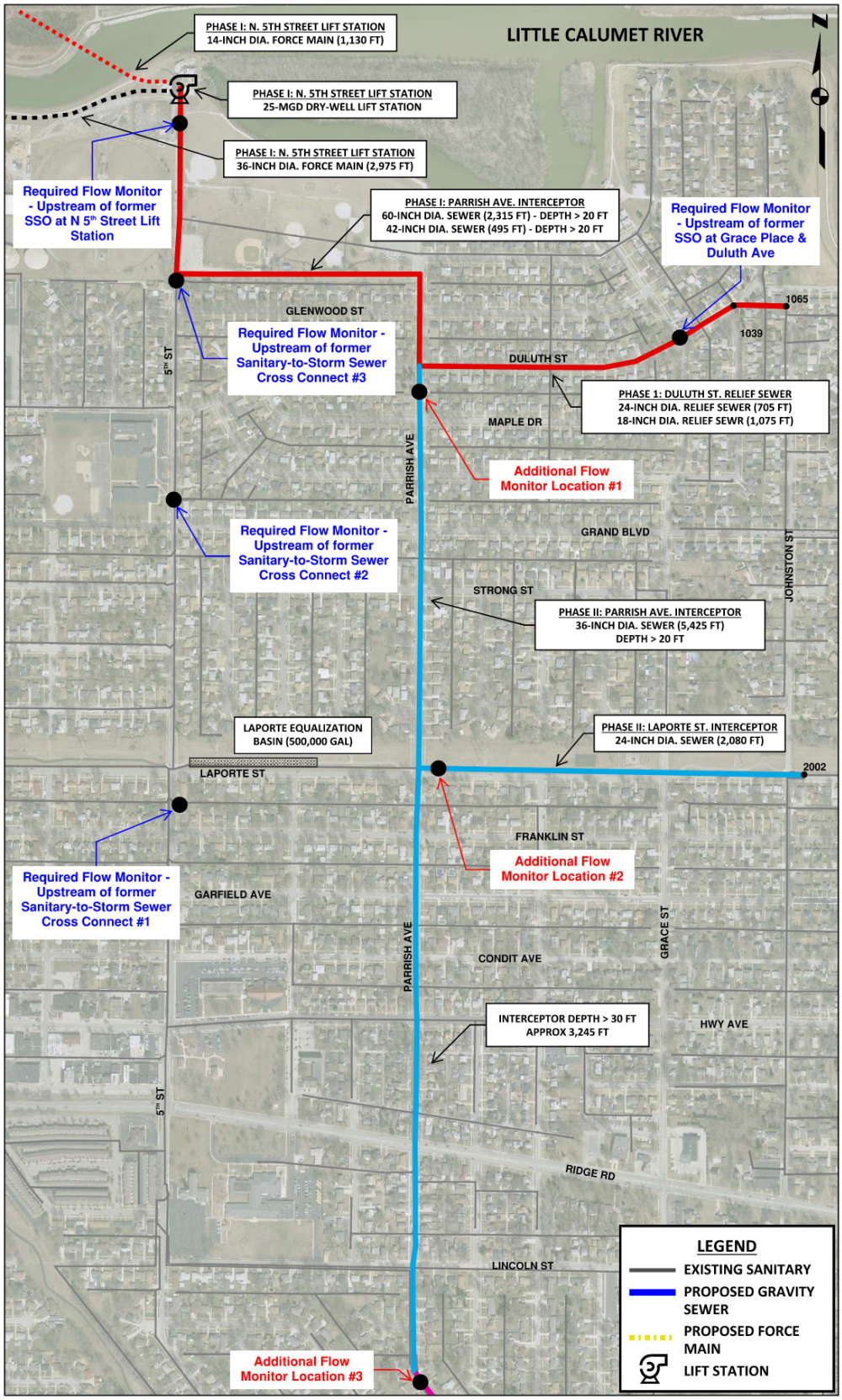

Figure A.6 Highland's Post-Construction Flow Monitor Locations

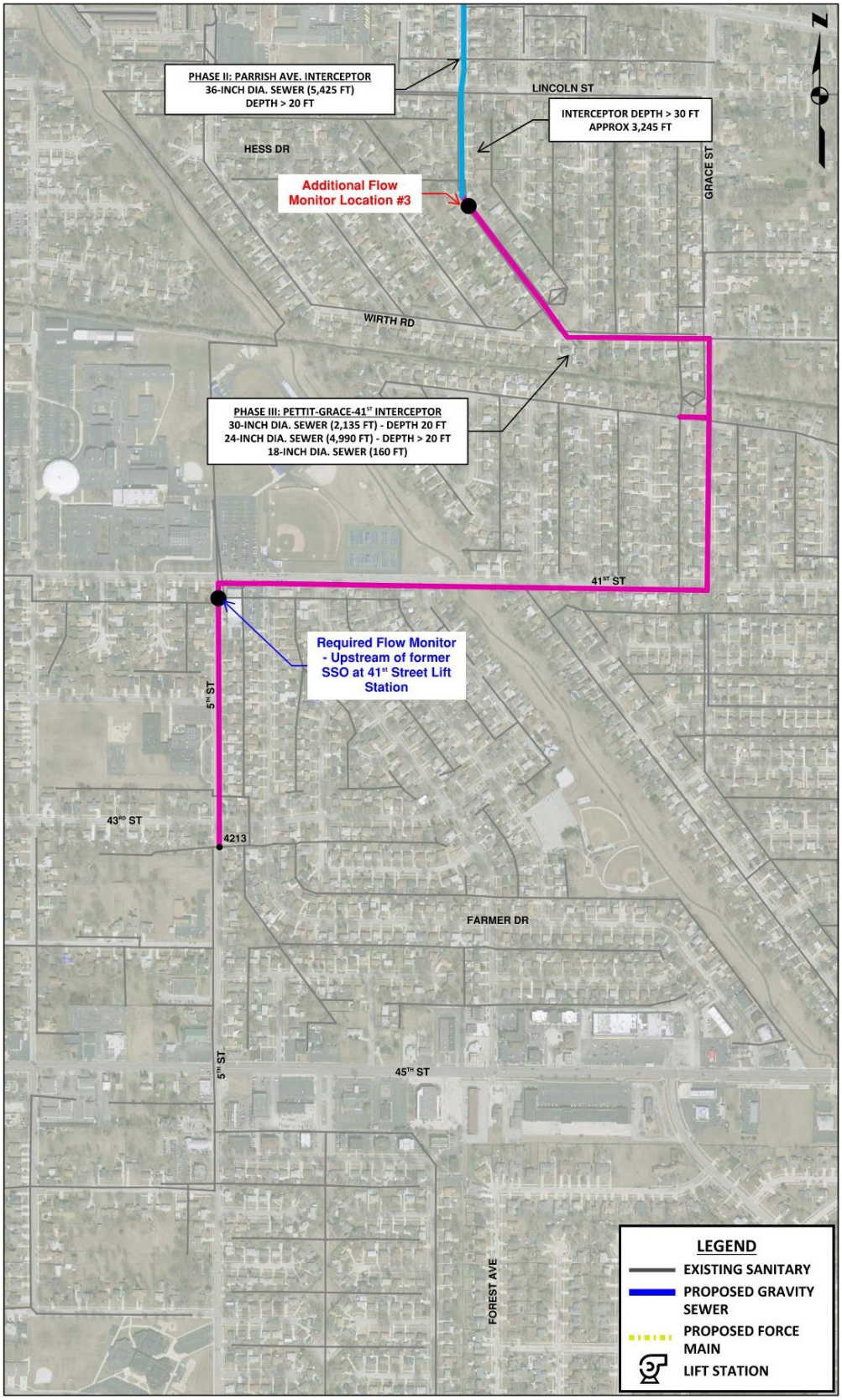

Figure A.7 Highland's Post-Construction Flow Monitor Locations

Table A.1 SSO Remedial Measures Implementation Schedule

Project	Description	SSO Eliminated	Detailed Implementation Schedule
SSO Remedial Project - Phase I			
Division A Parrish Ave. Interceptor • ≈ 2,325 feet of 60-inch sanitary gravity sewer • ≈ 495 feet of 42-inch sanitary gravity sewer Duluth St. Relief Sewer • ≈ 705 feet of 24-inch sanitary gravity sewer • ≈ 1,075 feet of 18-inch sanitary gravity sewer **Division B** N. 5th St. Lift Station • 25 MGD pumping to Hammond & 25 MGD catastrophic emergency pumping **Division C** N. 5th St. Force Main • ≈ 1,130 feet of 14-inch sanitary dry weather force main • ≈ 2,975 feet of 36 to 42-inch sanitary wet weather force main	Open cut gravity sanitary sewer construction between the N. 5th Street Interceptor and the area near Duluth Street and Grace Place. New N. 5th St. lift station and force main construction from Highland to Hammond dry and wet weather discharge locations. Existing N. 5th St. lift station decommissioning.	• SSO at Grace Place and Duluth Ave. • SSO at N. 5th Street Lift Station	**Obtain capacity certification:** April 30, 2024 The failure of the Hammond Sanitary District to issue a capacity certification in a timely fashion for the construction of SSO Remedial Phase 1 Projects, including the conveyance of 32.2 MGD from Highland to HSD, may serve as a basis for Highland to request an extension of the Phase 1 completion dates. Highland would need to demonstrate to EPA and IDEM that it has taken all necessary and timely steps to obtain the capacity certification in accordance with 327 IAC 3-6-4. Whether such an extension is granted shall be within EPA and IDEM's unreviewable discretion, subject only to Highland's ability to invoke the provisions of Section XII (Dispute Resolution). **Division A** Completion date: February 28, 2025 **Divisions B & C** Completion date: August 31, 2027, provided Highland requests and obtains written notice from HSD that it is ready to accept 25 MGD from the new N. 5th St. Lift Station and Force Main.

SSO Remedial Project - Phase II			
Parrish Ave. Interceptor • ≈ 5,425 feet of 36-inch sanitary gravity sewer LaPorte St. Interceptor • ≈ 2,080 feet of 24-inch sanitary gravity sewer	Trenchless and open cut gravity sanitary sewer construction on Parrish Ave. and LaPorte St. Existing L&J Lift Station decommissioning.	• Sanitary-to-Storm Sewer Cross Connect #1 (Sanitary Manhole 1345) • Sanitary-to-Storm Sewer Cross Connect #2 (Sanitary Manhole 1230)	Completion Date: March 31, 2032. The failure of the Hammond Sanitary District to issue a capacity certification in a timely fashion for the construction of SSO Remedial Phase II Projects may serve as a basis for Highland to request an extension of the Phase II completion date, up to February 1, 2033. Highland would need to demonstrate to EPA and IDEM that it has taken all necessary and timely steps to obtain the capacity certification in accordance with 327 IAC 3-6-4. Whether such an extension is granted shall be within EPA and IDEM's unreviewable discretion, subject only to Highland's ability to invoke the provisions of Section XII (Dispute Resolution).
SSO Remedial Project - Phase III			
Petitt-Grace-41st St. Interceptor • ≈ 2,135 feet of 30-inch sanitary gravity sewer • ≈ 4,990 feet of 24-inch sanitary gravity sewer • ≈ 160 feet of 18-inch sanitary gravity sewer	Open cut gravity sanitary sewer construction along Parrish Ave., Wirth Rd., Grace St., 41st St., and S 5th St. Existing Grace St. Lift Station, Petitt Park Lift Station, and 41st St. Lift Station decommissioning.	SSO at 41st Street Lift Station	Completion Date: February 1, 2033
Post-Construction Compliance Monitoring Program (PCCMP)			
PCCMP Rainfall and Flow Metering	Rainfall and sewer response data upstream of the historical SSO locations, where local hydraulics are favorable.	Not applicable	In 12 months after completion of SSO Remedial Measures Plan - Phase I, II and III
PCCMP Report	Summary report to confirm that the elimination using the Selected Demonstration Storms is achieved and/or propose additional improvements and schedule.	Not applicable	In 6 months after completion of PCCMP rainfall and flow metering

Appendix B

Highland's List of SSO Locations and Procedure to Eliminate Subsequently Discovered SSOs

Part 1. SSO Locations List

The definition of SSO Locations for purposes of this Decree include the following areas in Highland's SSCS where SSOs have occurred and continue to exist as of the date of lodging this Decree:

a. Sanitary-to-Storm Sewer Cross Connect #1 (Sanitary Manhole 1345);
b. Sanitary-to-Storm Sewer Cross Connect #2 (Sanitary Manhole 1230);
c. Constructed SSO via Bypass Pump at North 5th Street Lift Station;
d. Constructed SSO via Bypass Pump at 41st Street Lift Station; and
e. Constructed SSO via Bypass Pump in Northeast area of North 5th Street Sub-basin, located at the intersection of Grace Place and Duluth Ave.

Part 2. Procedure for Newly Discovered SSOs

A. When Highland implements its CMOM Program under Paragraph 26 of this Consent Decree, Highland shall actively investigate its SSCS in order to identify any additional SSO locations not included in the SSO Locations List set forth in Part 1 above. Any SSO location not on the list in Part 1 above will be treated as a newly discovered SSO to which the requirements of this Appendix shall apply.

B. Newly discovered SSOs shall be categorized as either maintenance-related or capacity-related. Maintenance-related SSOs are those caused solely by blockages, sewer collapses and other physical faults within the SSCS. Maintenance-related SSOs are remediated by, for example, sewer cleaning, root removal, and/or localized sewer repairs, as appropriate. Capacity-related-SSOs are those caused in part or entirely by as-designed inadequate capacity to convey peak flows within the SSCS. Capacity-related SSOs are remediated by measures such as the provision of larger sewers or relief sewers, or the reduction of peak wet weather flows by source control measures.

C. <u>Maintenance-related SSOs</u>.

1. If Highland determines that a newly discovered SSO is maintenance-related, then Highland shall determine within 14 Days of its discovery whether the work necessary to eliminate the SSO can be fully implemented within 30 Days of discovery. All such work shall be implemented as expeditiously as possible.

2. If Highland determines that the work can be fully implemented within 30 Days of discovering the SSO, then Highland shall (a) perform the work to eliminate the SSO in 30 Days or less, and (b) include a section on this SSO location in its next Semi-Annual Report, submitted under Paragraph 33 of the Consent Decree, that shall include: a description of the newly discovered SSO location; the maintenance-related issue(s) that caused the SSO; how it was discovered; the date of discovery; a description of the work implemented to eliminate the SSO; and the date by which the work was completed.

3. If Highland determines that more than 30 Days from the date of discovery of a new SSO location are required to implement the work necessary to eliminate the SSO, then within 14 Days of discovering the SSO, Highland shall submit to EPA and IDEM a notification with a schedule that eliminates the SSO as expeditiously as possible. The Highland schedule is subject to EPA and IDEM review and approval and shall include: a description of the newly discovered SSO location; the maintenance-related issue(s) causing the SSO; how it was discovered; the date of discovery; a description of the work that Highland plans to implement to eliminate the SSO; date by which all activities will be completed and the SSO eliminated; and an explanation about why the activities cannot be completed within 30 Days of Highland discovering the SSO. A pending request for review of Highland's schedule should not be treated as having been approved by EPA and IDEM, and thus Highland shall implement all necessary work as expeditiously as possible. Highland shall implement the approved plan under the approved schedule.

D. Capacity-related SSOs.

1. If Highland determines that a newly discovered SSO is capacity-related, then within 30 Days of such discovery, Highland shall notify EPA and IDEM. The notice shall include the following information: a description of the newly discovered SSO location; its configuration; how it was discovered; the date of discovery; and a description of all investigations and evaluations of the newly discovered SSO that Highland has undertaken as of the date of the notice.

2. Within 90 Days of the date of such discovery, Highland shall submit an SSO Remedial Measures Plan Addendum to EPA and IDEM for review and approval. The SSO Remedial Measures Plan Addendum shall identify remedial project(s) and the proposed schedule to eliminate the SSO. An Addendum shall alter the remedial measures identified in the original SSO Remedial Measures Plan (or a separate, pre-existing Addendum) for other SSO locations only when necessary. An Addendum shall not delay the final milestone date for any remedial measures identified in the original SSO Remedial Measures Plan or any separate, pre-existing Addenda, unless an extension of a final milestone date for any such remedial measures is requested in writing by Highland and approved by EPA and IDEM. The Addendum shall provide all of the information necessary for such Addendum and the SSO Remedial Measures Plan (and any separate, pre-existing Addenda) to together comply with the requirements of Appendix A. The final milestone for the completion of the project(s) in the Addendum shall be as expeditious as possible, and shall not be later than the final milestone date in the SSO Remedial Measures Plan, unless EPA and IDEM approve of a later date in writing. Highland shall implement the approved SSO Remedial Measures Plan Addendum under the approved schedule.

3. Highland shall report all activities undertaken to address newly discovered, capacity-related SSOs in a section in its Semi-Annual Report, submitted under Paragraph 33 of the Consent Decree, which shall for each newly discovered SSO: describe the

progress on project(s) performed since the EPA and IDEM approved the Plan or Addendum to eliminate the SSO; describe the approved project(s) that Highland shall implement going forward to eliminate the SSO; and the timeframe for completing the remaining approved project(s).

Appendix C

Highland's SSO Reporting Table

Number (tally number of SSOs or Property Backups)	**Date (mm/dd/yy) and Time Release Began/Ended**	**Drainage Basin Location**	**Location of Release**	**Description of Area Impacted**	**Reason for SSO**	**Amount of Flow Released**	**Rainfall Information and Classification**	**Name of Receiving Waters Impacted**	**Did Highland Follow its Overflow Emergency Plan? (Y or N)**	**Actions taken to prevent, minimize, or mitigate damage, including clean-up and treatment of affected area**	**Actions taken or planned to prevent recurrence**	**Did Highland exceed its Contractual Peak Flow Rate? (Y or N)**	**Comments**
Case specific accounting method	State Form 48373 - Box 6	Not in State Form 48373	State Form 48373 - Box 8	State Form 48373 - Box 18	State Form 48373 - Box 15 & 17	State Form 48373 - Box 10	Typically, Highland has added this information in Box 17 of the State Form 48373	State Form 48373 - Box 18	Not in State Form 48373	State Form 48373 - Box 20	State Form 48373 - Box 21	Not in State Form 48373	Catch-all section that would be helpful if any of the other boxes require further explanation
Example #1 - SSO	***Ex.*** *6-15-2015 to 6-16-2015 2:30 PM to 11:59 PM*	*5th Street Basin*	*MH's 1345 and 1230 all on 5th St Interceptor*	*At 2 Constructed Overflows out of 5th St San Swr into 5th St Stm Swr*	*Rainfall, Excessive I/I, Under Capacity Sewer*	*1,456,470 gal*	*10 day, 1.2 yr to 10 day, 2.9 yr (4.37 to 5.14 inches Rainfall)*	*Little Calumet River*	*Yes*	*Followed OEP; placed signs around the SSO area alerting the public*	*Development of SSO Remedial Measure Plan*	*Yes*	
Example #2 - SSO	***Ex*** *6-15-2015 to 6-16-2015 7:30 PM to 9:00 AM*	*5th Street Basin*	*MH 1098 on 5th St Interceptor*	*At 1 Constructed Overflow out of 5th St San Swr into 5th St Stm Swr*	*Rainfall, Excessive I/I, Under Capacity Sewer*	*25,702 gal*	*10 day, 1.2 yr to 10 day, 2.9 yr (4.37 to 5.14 inches Rainfall)*	*Little Calumet River*	*Yes*	*Followed OEP; placed signs around the SSO area alerting the public*	*Development of SSO Remedial Measure Plan*	*Yes*	